PORT OF EVERETT WINE WALK BUILDING A12

XXXX SEINER DRIVE
EVERETT, WASHINGTON 98201
100% DESIGN DEVELOPMENT - 12.14.2023

bcra
T 253.627.4367 F 253.627.4395 WWW.BCRADESIGN.COM
2106 PACIFIC AVENUE, SUITE 300, TACOMA, WA 98402

SEAL

PROJECT
PORT OF EVERETT
WINE WALK BUILDING A12
XXXX SEINER DRIVE
EVERETT, WASHINGTON 98201

REVISIONS

DATE
12.14.2023

BCRA NO.
23045.00.00

DRAWN BY: AJ, EH, IT

REVIEWED BY: DD, AT

SHEET TITLE
COVER

bcra

© COPYRIGHT 2023 - BCRA, INC. ALL RIGHTS RESERVED

SHEET
G-101

PROGRESS SET

22x34 12/14/2023 4:15:15 PM

IF SHEET MEASURES LESS THAN 22"X34", IT IS A REDUCED PRINT. REDUCE SCALE ACCORDINGLY

VICINITY MAP

PROJECT INFORMATION

SITE ADDRESS	XXXX SEINER DRIVE, EVERETT, WASHINGTON 98201
PARCEL NUMBER	29051800402200
ZONING	MU
LAND USE DESIGNATION	744 MARINAS
PROJECT SITE AREA	0.33 ACRES / 14,375 SQUARE FEET
SCOPE OF WORK	NEW CONSTRUCTION OF A TWO-STORY 15,000 SF COMMERCIAL BUILDING (SHELL AND CORE) .ALONG THE PORT OF EVERETT WATERFRONT PLACE
UTILITY PURVEYORS	SEWER — CITY OF EVERETT PUBLIC WORKS UTILITY WATER — CITY OF EVERETT PUBLIC WORKS UTILITY ELECTRIC — SNOHOMISH COUNTY PUD
PROJECT SITE ACCESS	EAST: EXISTING PAVED ENTRY FROM SEINER DRIVE

GENERAL NOTES

1. ALL CONSTRUCTION SHALL COMPLY WITH THE 2018 INTERNATIONAL BUILDING CODE, THE AMERICANS WITH DISABILITIES ACT, AND ALL APPLICABLE LOCAL CODES, ORDINANCES, AND STANDARDS.
2. DO NOT SCALE DRAWINGS. DIMENSIONS GOVERN. THE CONTRACTOR SHALL NOTIFY ARCHITECT IMMEDIATELY OF ANY DISCREPANCIES.
3. WHERE CONSTRUCTION DETAILS ARE NOT SHOWN OR NOTED FOR ANY PART OF THE WORK, THE DETAILS SHALL BE THE SAME AS FOR OTHER SIMILAR WORK. IF QUESTIONS CANNOT BE RESOLVED IN THIS MANNER, CONTACT THE ARCHITECT PRIOR TO PROCEEDING WITH THE WORK.
4. AN APPROVED PUBLIC SAFETY KEY BOX SHALL BE INSTALLED ADJACENT THE MAIN ENTRANCE AND SHALL BE CLEARLY VISIBLE, MOUNTED WITHIN SIX FEET OF THE GRADE, AND APPROVED BY THE LOCAL JURISDICTION. THE KEY BOX SHALL CONTAIN KEYS THAT OPERATE THE ELEVATOR RECALL AND EMERGENCY OVERRIDE SYSTEMS. KEYS SHALL BE CLEARLY MARKED AS FOR WHAT DOOR, ROOM, AREA OR LOCK THEY SERVE. THE KEY BOX SHALL CONTAIN KEYS TO OPEN DOORS OR OTHER ACCESS MEANS AT THE FOLLOWING LOCATIONS:
   - THE MAIN ENTRANCE
   - ROOMS CONTAINING CONTROL VALVES FOR AUTOMATIC SPRINKLER SYSTEMS
   - ROOMS CONTAINING FIRE ALARM SYSTEM CONTROL PANELS
   - ROOMS CONTAINING ELEVATOR EQUIPMENT
   - ROOMS CONTAINING MAIN ELECTRICAL SERVICES PANELS
5. WHERE DEVICES OR ITEMS OR PARTS THEREOF ARE REFERED TO IN SINGULAR IT IS INTENDED THAT SUCH SHALL APPLY TO AS MANY SUCH DEVICES, ITEMS OR PARTS AS ARE REQUIRED TO PROPERLY COMPLETE THE WORK.
6. FIELD MEASURE AND CONFIRM DIMENSIONS FOR OWNER PROVIDED EQUIPMENT AND FURNISHINGS.
7. PROVIDE STIFFENERS, BRACING, BACKING PLATES AND BLOCKING REQUIRED FOR SECURE INSTALLATION OF GRAB BARS, DOORS AND DOOR HARDWARE INCLUDING WALL-MOUNTED DOOR STOPS, HANDRAILS, WALL-MOUNTED SHELVES, MISCELLANEOUS EQUIPMENT, AND SUSPENDED MECHANICAL AND ELECTRICAL EQUIPMENT.
8. COORDINATE AND PROVIDE ALL BASE AND HOUSEKEEPING PADS FOR MECHANICAL, PLUMBING AND ELECTRICAL EQUIPMENT.
9. LOCATE ACCESS DOORS IN ACCORDANCE WITH APPLICABLE CODES. SUBMIT PROPOSED LOCATIONS TO THE ARCHITECT FOR REVIEW AND ACCEPTANCE PRIOR TO INSTALLATION.
10. FINISH FLOOR ELEVATIONS ARE TO TOP OF CONCRETE AND TOPPING SLAB UNLESS OTHERWISE NOTED.
11. COORDINATE EXACT SIZE AND PLACEMENT OF EQUIPMENT BEING PROVIDED.
12. THE CONTRACTOR SHALL PROVIDE TEMPORARY BRACING FOR THE BUILDING STRUCTURE AND STRUCTURAL COMPONENTS UNTIL FINAL CONNECTIONS HAVE BEEN COMPLETED IN ACCORDANCE WITH THE CONSTRUCTION DOCUMENTS.
13. FIRE BLOCKING AND SMOKE BARRIERS SHALL BE INSTALLED IN ACCORDANCE WITH 2018 INTERNATIONAL BUILDING CODE.

ABBREVIATIONS

AFF	ABOVE FINISHED FLOOR
CJ	CONTROL JOINT
DS	DOWNSPOUT
EQ	EQUAL
EXT	EXTENSION
FD	FLOOR DRAIN
FV	FIELD VERIFY
GA	GAUGE
GWB	GYPSUM BOARD
MAX	MAXIMUM
MDF	MEDIUM DENSITY FIBERBOARD
MIN	MINIMUM
OC	ON CENTER
OFCI	OWNER FURNISHED, CONTRACTOR INSTALLED
OPP	OPPOSITE
RR	RESTROOM
SIM	SIMILAR
TYP	TYPICAL
UNO	UNLESS NOTED OTHERWISE

SHEET INDEX

GENERAL

SHEET NUMBER	DRAWING DESCRIPTION
G-101	COVER
G-102	SHEET INDEX, PROJECT INFORMATION, PROJECT TEAM
G-201	ZONING CODE SUMMARY
G-202	BUILDING CODE SUMMARY
G-301	LIFE SAFETY PLANS
G-401	AIR BARRIER PRESSURE BOUNDARY PLAN
G-402	AIR BARRIER PRESSURE BOUNDARY SECTIONS

CIVIL

C-001	CIVIL COVER SHEET
C-002	GENERAL NOTES AND LEGEND
C-101	DEMO AND TESC PLAN
C-201	SITE AND SURFACING PLAN
C-301	GRADING AND DRAINAGE PLAN
C-401	UTILITY PLAN

LANDSCAPE

L-301	A12 - LANDSCAPE AND MATERIAL PLAN
L-302	A12 - LANDSCAPE AND MATERIAL PLAN ENLARGEMENTS
L-390	A12 - LANDSCAPE AND MATERIAL PLAN SCHEDULE AND NOTES
L-401	A12 - IRRIGATION PLAN
L-501	PLANTING DETAILS
L-510	IRRIGATION DETAILS
L-520	SITE DETAILS
L-521	SITE DETAILS

GEOTECH

GI1.01	GROUND INCLUSION PLAN
GI1.02	GROUND INCLUSION TYPICAL SECTION
GI1.03	SPECIFICATIONS
GI1.04	SPECIFICATIONS

ARCHITECTURAL

A-111	SITE PLAN
A-121	FIRST FLOOR PLAN
A-122	SECOND FLOOR PLAN
A-151	FIRST FLOOR REFLECTED CEILING PLAN
A-152	SECOND FLOOR REFLECTED CEILING PLAN
A-161	ROOF PLAN
A-201	EXTERIOR ELEVATIONS
A-202	EXTERIOR ELEVATIONS
A-211	INTERIOR ELEVATIONS
A-212	INTERIOR ELEVATIONS
A-213	INTERIOR ELEVATIONS
A-301	BUILDING SECTIONS
A-302	BUILDING SECTIONS
A-303	BUILDING SECTIONS
A-304	BUILDING SECTIONS
A-311	WALL SECTIONS
A-312	WALL SECTIONS

ARCHITECTURAL

A-313	WALL SECTIONS
A-314	WALL SECTIONS
A-401	ENLARGED FLOOR PLANS
A-411	STAIR PLANS AND SECTIONS
A-412	STAIR PLANS AND SECTIONS
A-413	STAIR PLANS AND SECTIONS
A-501	ELEVATOR PLANS AND SECTIONS
A-501a	ADA DETAILS - TYPICAL CLEARANCES AND MOUNTING HEIGHTS
A-501b	ADA DETAILS - PLUMBING FIXTURES
A-501c	ADA DETAILS - SIGNAGE
A-543	DOOR DETAILS
A-544	STOREFRONT DETAILS
A-545	ELEVATOR DETAILS
A-562	CANOPY DETAILS
A-571	GUARDRAIL DETAILS, STAIR DETAILS
A-591	EXTERIOR WALL DETAILS - PLAN
A-592	EXTERIOR WALL DETAILS - SECTION
A-611	STOREFRONT TYPES
A-612	STOREFRONT TYPES
A-613	DOOR SCHEDULE, DOOR FRAME TYPES
A-621a	INTERIOR WALL ASSEMBLY TYPES, EXTERIOR WALL ASSEMBLY TYPES
A-621b	INTERIOR WALL ASSEMBLY TYPES, EXTERIOR WALL ASSEMBLY TYPES
A-622a	FLOOR AND ROOF ASSEMBLY TYPES
A-622b	FLOOR AND ROOF ASSEMBLY TYPES

STRUCTURAL

S-001	STRUCTURAL TITLE SHEET
S-002	STRUCTURAL GENERAL NOTES
S-003	STRUCTURAL GENERAL NOTES
S-004	STRUCTURAL GENERAL NOTES
S-121	FIRST FLOOR FOUNDATION PLAN
S-122	SECOND FLOOR FRAMING PLAN
S-123	ROOF FRAMING PLAN
S-124	MECHANICAL WELL TOP OF FRAMING PARTIAL PLAN
S-301	STRUCTURAL CONCRETE DETAILS
S-302	STRUCTURAL CONCRETE DETAILS
S-501	STRUCTURAL STEEL DETAILS
S-502	STRUCTURAL STEEL DETAILS
S-601	STRUCTURAL WOOD DETAILS
S-602	STRUCTURAL WOOD DETAILS
S-603	STRUCTURAL WOOD DETAILS
S-604	STRUCTURAL WOOD DETAILS
S-605	STRUCTURAL WOOD DETAILS
S-606	STRUCTURAL WOOD DETAILS

MECHANICAL

M-101	MECHANICAL LEGEND AND GENERAL NOTES
M-121	FIRST FLOOR MECHANICAL PLAN
M-122	SECOND FLOOR MECHANICAL PLAN
M-131	ROOF MECHANICAL PLAN
M-221	FIRST FLOOR MECHANICAL PIPING PLAN
M-222	SECOND FLOOR MECHANICAL PIPING PLAN
M-501	MECHANICAL DETAILS I
M-601	MECHANICAL SCHEDULES I
M-602	MECHANICAL SCHEDULES II

ELECTRICAL

E-100	BLDG A12 ELECTRICAL SITE PLAN
E-101	BLDG A12 ELECTRICAL LEGEND, ABBREVIATIONS, AND NOTES
E-102	BLDG A12 LIGHTING FIXTURE SCHEDULE
E-103	BLDG A12 MECHANICAL EQUIPMENT SCHEDULE
E-201	BLDG A12 FIRST FLOOR LIGHTING PLAN
E-202	BLDG A12 SECOND FLOOR LIGHTING PLAN
E-203	BLDG A12 ROOF LIGHTING PLAN
E-301	BLDG A12 FIRST FLOOR POWER AND SYSTEMS PLAN
E-302	BLDG A12 SECOND FLOOR POWER AND SYSTEMS PLAN
E-303	BLDG A12 ROOF POWER & SYSTEMS PLAN
E-401	BLDG A12 ENLARGED ELECTRICAL ROOM PLAN
E-501	BLDG A12 ONE-LINE DIAGRAM
E-601	BLDG A12 PANEL SCHEDULES
E-602	BLDG A12 PANEL SCHEDULES

PLUMBING

P-101	PLUMBING LEGEND AND GENERAL NOTES
P-111	PLUMBING FOUNDATION PLAN
P-121	FIRST FLOOR PLUMBING PLAN
P-122	SECOND FLOOR PLUMBING PLAN
P-131	ROOF PLUMBING PLAN
P-401	ENLARGED PLUMBING FLOOR PLAN
P-501	PLUMBING DETAILS I
P-502	PLUMBING DETAILS II
P-601	PLUMBING SCHEDULES

FIRE ALARM/FIRE PROTECTION

FA001	FIRE ALARM SYSTEM LEGEND AND NOTES
FA002	FIRE ALARM SYSTEM RISER AND SEQUENCE OF OPERATIONS MATRIX
FA101	FIRE ALARM SYSTEM PLAN - FIRST FLOOR
FA102	FIRE ALARM SYSTEM PLAN - SECOND FLOOR
FX001	FIRE PROTECTION NOTES
FX002	FIRE PROTECTION RISER AND NOTES
FX101	FIRE PROTECTION - FIRST FLOOR PLAN
FX102	FIRE PROTECTION - SECOND FLOOR PLAN

ARCHITECTURAL SYMBOLS

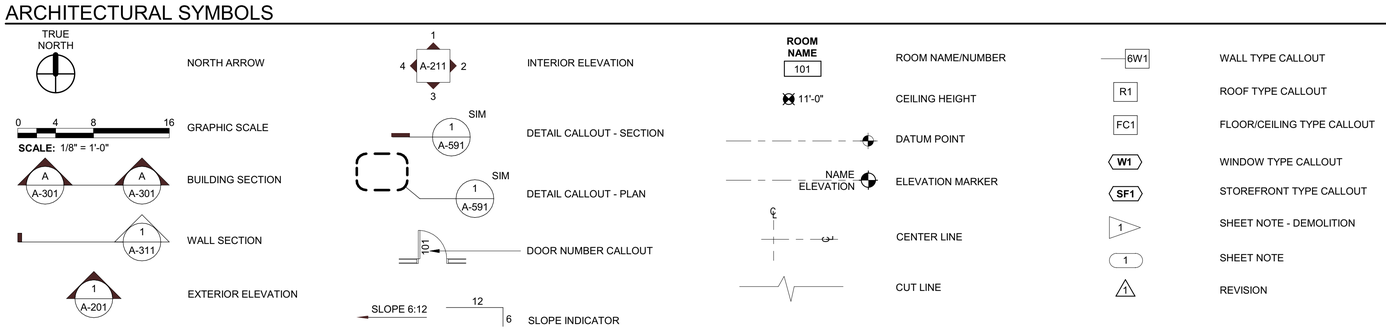

PROJECT TEAM

OWNER
PORT OF EVERETT
1205 CRAFTSMAN WAY, SUITE 200
EVERETT, WA 98201
PHONE: 425.259.3164
CONTACT: LISA LEFEBER
EMAIL: PUBLICAFFAIRS@PORTOFEVERETT.COM

OWNER
THE SCHUSTER GROUP
2808-II EAST MADISON STREET, SUITE 203
SEATTLE, WA 98112
PHONE: 206.529.3900
CONTACT: HOLLY GARDNER
EMAIL: HGARDNER@THESCHUSTERGROUP.COM

ARCHITECT
BCRA, INC
2106 PACIFIC AVENUE, SUITE 300
TACOMA, WA 98402
PHONE: 253.627.4367
CONTACT: DJ DEAN
EMAIL: DDEAN@BCRADESIGN.COM

CIVIL
BCRA, INC
2106 PACIFIC AVENUE, SUITE 300
TACOMA, WA 98402
PHONE: 253.627.4367
CONTACT: RYAN BALTAZAR
EMAIL: RBALTAZAR@BCRADESIGN.COM

LANDSCAPE ARCHITECTURE
BCRA, INC
2106 PACIFIC AVENUE, SUITE 300
TACOMA, WA 98402
PHONE: 253.627.4367
CONTACT: ERIC STREEBY
EMAIL: ESTREEBY@BCRADESIGN.COM

STRUCTURAL
LUND OPSAHL
1215 FOURTH AVENUE, SUITE 1200
SEATTLE, WA 98161
PHONE: 206.402.5156
CONTACT: OWEN BOWER
EMAIL: OBOWER@LUNDOPSAHL.COM

MECHANICAL
BCE ENGINEERS
6021 TWELFTH STREET EAST, SUITE 200
FIFE, WA 98424
PHONE: 253.922.0446
CONTACT: JOE SNYDER
EMAIL: JOE.SNYDER@BCEENGINEERS.COM

ELECTRICAL
BCE ENGINEERS
6021 TWELFTH STREET EAST, SUITE 200
FIFE, WA 98424
PHONE: 253.922.0446
CONTACT: JOE SNYDER
EMAIL: JOE.SNYDER@BCEENGINEERS.COM

SURVEYOR
DAVID EVAN ASSOCIATES
1620 W. MARINE VIEW DRIVE
EVERETT, WA 98201
PHONE: 425.259.4099

22x34 12/14/2023 4:37:32 PM

IF SHEET MEASURES LESS THAN 22"X34", IT IS A REDUCED PRINT. REDUCE SCALE ACCORDINGLY

bcra
T 253.627.4367 F 253.627.4395 WWW.BCRADESIGN.COM
2106 PACIFIC AVENUE, SUITE 300, TACOMA, WA 98402

SEAL

PROJECT
PORT OF EVERETT
WINE WALK BUILDING A12
XXXX SEINER DRIVE
EVERETT, WASHINGTON 98201

REVISIONS

DATE 12.14.2023
BCRA NO. 23045.00.00
DRAWN BY: JC, MD
REVIEWED BY: DD, AT
SHEET TITLE
SHEET INDEX, PROJECT INFORMATION, PROJECT TEAM

bcra

© COPYRIGHT 2023 - BCRA, INC. ALL RIGHTS RESERVED

SHEET
G-102

PROGRESS SET

GLAZING PERCENTAGE CALCULATIONS (UPDATED 12.12.2023 AT)

PER EVERETT WATERFRONT GUIDELINES:
A MINIMUM OF 60% OF THE GROUND FLOOR FACADE IS BETWEEN 2' AND 10' IS CLEAR GLASS STOREFRONT.

NORTH ELEVATION AREA BETWEEN 2'-10' =418 SF
TRANSPARENCY BETWEEN 2'-10' = 228 SF = 54%

SOUTH ELEVATION AREA BETWEEN 2'-10' = 449 SF
TRANSPARENCY BETWEEN 2'-10' = 80 SF = 17%

EAST ELEVATION AREA BETWEEN 2'-10' = 1231 SF
TRANSPARENCY BETWEEN 2'-10' = 594 SF = 48 %

WEST ELEVATION AREA BETWEEN 2'-10' = 1034 SF
TRANSPARENCY BETWEEN 2'-10' = 622 SF = 60%

TOTAL AREA = 3,132 SF
TOTAL TRANSPARENCY = 1,524 SF = **48%**

REQUIRED STRUCTURAL SHEARWALLS RESULT IN BLANK WALLS COULD BE EXCLUDED FROM THE TOTAL AREAS OF FACADE BETWEEN 2'-10' TO MEET REQUIREMENT.

STANDARD IS ALSO MET WITH **ADDITIONAL TRANSPARENCY** ABOVE STANDARD BETWEEN 0' AND 2'

N- 65 SF
E-162 SF
S- 16 SF
W- 156 SF
TOTAL= 399 SF+ 1,524 SF
TOTAL TRANSPARENCY= 1,923 SF= **61%**

PER 2018 WASHINGTON STATE ENERGY CODE:
A MAXIMUM OF 40% OF THE BUILDING ENVELOPE CAN BE GLAZED.
(EXCLUDES UNCONDITIONED SPACES)

NORTH ELEVATION AREA TOTAL = 1,441 SF
GLAZING = 633 SF = 43%

SOUTH ELEVATION AREA TOTAL =695 SF
GLAZING = 103 SF =14%

EAST ELEVATION AREA TOTAL = 3072 SF
GLAZING = 1,081 SF = 35%

WEST ELEVATION AREA TOTAL = 3,436 SF
GLAZING = 1,863 SF = 54%

TOTAL AREA = 8,644 SF
TOTAL GLAZING = 3,680 SF = 42% (PRESCRIPTIVE: 40% GLAZING)

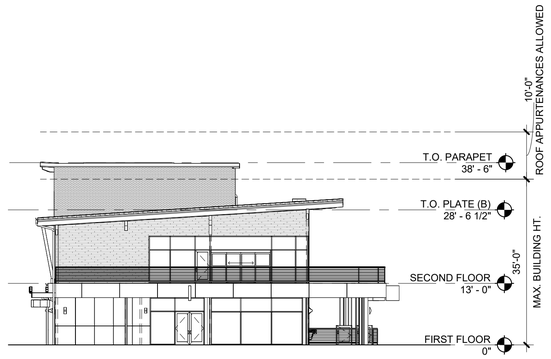

5 BUILDING HEIGHT EXHIBIT-NORTH ELEV.
1/16" = 1'-0"

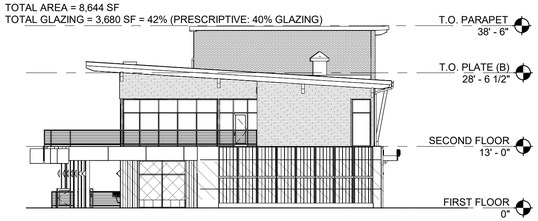

2 SOUTH GLAZING %
1/16" = 1'-0"

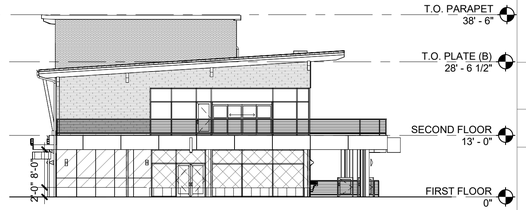

1 NORTH GLAZING %
1/16" = 1'-0"

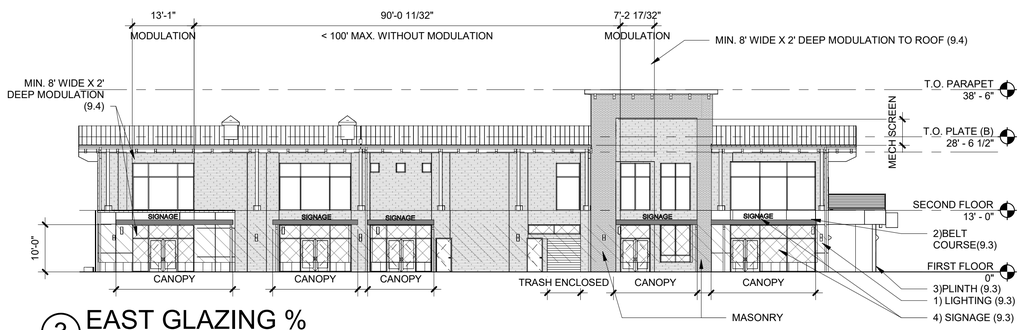

3 EAST GLAZING %
1/16" = 1'-0"

4 WEST GLAZING %
1/16" = 1'-0"

ANALYSIS BASED UPON AMENDED WATERFRONT PLACE CENTRAL PLANNED DEVELOPMENT OVERLAY ZONE

MIN. LOT AREA: 5,000 SF
FRONT SETBACK: 10'
SIDE (STREET): NONE
SIDE (INTERIOR): NONE
MIN. LOT WIDTH: 50'
MIN. LOT DEPTH: 80'
MAX BUILDING HEIGHT: 35' PROVIDED HEIGHT: 35'-0"
LOCATED IN FISHERMAN'S HARBOR

LAND USE CODE SECTION	DESCRIPTION	ACHIEVED	COMMENTS OR JUSTIFICATION	EXHIBIT
1. EXHIBIT 5- HEIGHT ZONE MAP		**COMPLIES**	PER EXHIBIT 5 IN THE WC-PDO, MAX HEIGHT IS 35'. PROPOSED HEIGHT= 35' TO TOP OF RIDGE	**EXHIBIT**
2. EXHIBIT 10- DESIGN STANDARDS **VIEW PROTECTION-**	ROOF APPURTENANCE ALLOWED PER DA#4 P.12 BUILDING HEIGHT ALLOWED + 10'	**COMPLIES**	35' HEIGHT TO TOP OF RIDGE IN COMPLIANCE WITH 35' MAXIMUM HEIGHT WITH ROOF APPURTENANCES = 35' + 10'= 45' HT ALLOWED	**EXHIBIT**
ARCHITECTURAL DESIGN-	GROUND LEVEL MATERIALS AND DETAILS CONVEY A HIGH LEVEL OF INTEREST	**COMPLIES**		
STANDARD 9.1.c.	1. A MINIMUM OF 60% OF GROUND FLOOR FACADE IS BETWEEN 2' AND 10' IS CLEAR GLASS STOREFRONT.	**COMPLIES** WITH ADDITIONAL GLAZING FROM BETWEEN 0' TO 2' ABOVE REQUIREMENT	A. WEST ELEVATION AREA BETWEEN 2'-10'= a. TRANSPARENCY BETWEEN 2'-10'= 622 SF= 60 % B. EAST ELEVATION AREA BETWEEN 2'-10'= b. TRANSPARENCY BETWEEN 2'-10'= 594 SF= 48 % C. NORTH ELEVATION AREA BETWEEN 2'-10'= c. TRANSPARENCY BETWEEN 2'-10'= 228 SF= 54% D. SOUTH ELEVATION AREA BETWEEN 2'-10'= d. TRANSPARENCY BETWEEN 2'-10'= 80 SF= 17 % **TOTAL AREA=** 3132 SF **TOTAL TRANSPARENCY**= 1524 SF = 48 % (60% REQUIRED) **ADDITIONAL GLAZING BTWN 0'-2'**= 399 SF+1524 SF=1923 SF (61 %)	**EXHIBIT**
STANDARD 9.1.f.	2. CANOPIES - 5' DEEP, 8-12' HEIGHT	**COMPLIES**	ARE PROVIDED AT ENTRANCE ACCESS POINTS FOR OVERHEAD WEATHER PROTECTION	**EXHIBIT**
STANDARD 9.2.a	3. PROMINENT ENTRANCES	**COMPLIES**	GROUP B- COMPLIANT THROUGH OVERHANGS, GLASS WINDOWS FLANKING DOORS, CANOPY	**EXHIBIT**
STANDARD 9.6.c	4. ROOF FORMS SLOPE (PITCHED AT 1:12 TO 12:12)	**COMPLIES**	COMPLIES-ROOF SLOPE IS 1.5: 12	**EXHIBIT**
STANDARD 9.6.d/ 14	5. SCREENING OF SERVICE AREAS	**COMPLIES**	TRANSFORMER, ELECTRICAL, GAS METERS, TRASH AND RECYCLING LOCATIONS ARE ENCLOSED BEHIND SCREEN WALLS OR BEHIND DOORS FROM PUBLIC VIEW AND MECH EQUIPMENT IS WORKED INTO ROOF FORM	
LIGHTING STANDARD 12.c	6. BUILDING MOUNTED ILLUMINATION	**COMPLIES**	DECORATIVE EXTERIOR BUILDING LIGHTING IS DOWNCAST AND SHIELDED	
BUILDING ORIENTATION		**COMPLIES**	BUILDING OUTDOOR SEATING/ ROOF IS ORIENTED PARALLEL TO THE WATERFRONT TO MAX VIEWS TO THE WATER FOR USERS OF THE BUILDING. BUILDING IS PARALLEL ENTRANCES ORIENTED TO SEINER DRIVE TO CREATE BUILDING & WELCOMING ENTRANCES.	
BUILDING DESIGN GENERAL STANDARDS		**COMPLIES**	GROUND LEVEL BUILDING COMPONENTS AND DETAILS ARE DESIGNED TO CONVEY VISUAL INTEREST AND REINFORCE A CONNECTION TO THE MARITIME HISTORY OF THE AREA. EXTERIOR MATERIALS WERE CHOSEN AND DETAILED FOR DURABILITY AND LONGEVITY FOR THE MARITIME ENVIRONMENT AND TO REINFORCE THE DISTRICT THEME. BUILDING DETAILS ARE THOUGHTFULLY DESIGNED TO PROVIDE DURABILITY IN THE MARITIME CLIMATE, VISUAL INTEREST, AND DETAILS ARE APPROPRIATELY REPEATED THROUGH OUT BUILDING FOR EFFICIENT DESIGN. EXTERIOR LIGHTING HAS BEEN SELECTED TO PROVIDE COMPLIMENTARY VISUAL INTEREST TO THE BUILDING AND THE CHARACTER OF THE DISTRICT. SHOWING MASONRY ON WALL ON SEINER DRIVE TO CREATE STRONG VISUAL AND TEXTURAL COMPLEXITY	
SIGNAGE -STANDARD 13,14			**SEPARATE PERMIT AT TIME OF TENANT BUILD OUT** (SEE 13. SIGNAGE CREATIVITY/UNIQUE EXPRESSION) (SEE 14. SIGNAGE INTEGRATION WITH ARCHITECTURE) (SEE 13.3 SIGNAGE COMMERCIAL SIGNS)- 8' CLEARANCE OVER SIDEWALK,- 13.3b- IN ADDITION TO SIGNS PERMITTED BY SIGN CODE- ONE ADDITIONAL SIGN- 2D OR 3D GRAPHIC SYMBAL, 2) ORIENTED TO PEDESTRIANS 3) NO MORE THAN 12 SF PER SIDE	
3. EXHIBIT 11- PERMITTED USES		**COMPLIES**	PER TABLE E.2 IN THE PDO, RESTAURANT, RETAIL, SPA ARE PERMITTED NON RESIDENTIAL BUSINESS AND COMMERCIAL USES	
9.3 GROUND FLOOR	PROVIDE QTY. 4- 1) LIGHTING, 2) MEDALLIONS, 3) BELT COURSES 4) PLINTHS 5) KICK PLATES, 6) PROMINENT SILLS, TILE WORK, PED SCALE 9) PLANTER BOXES	COMPLIES	PROVIDING 1) LIGHTING, 2) BELT COURSES, 3) PLINTHS FOR COLUMNS 4) PEDESTRIAN SCALE SIGNS/PAINTED WINDOWS	**EXHIBIT**
9.4 MASSING/ARTICULATION	a. 100' at least 8' wide x 2' deep, b. To Roof, c. blank walls discouraged	COMPLIES	MASONRY WALL ADDED AND WALLS RECESSED/BUMPED OUT TO ARTICULATE MODULATION AT ENTRY WAYS, WINDOWS ADDED TO WALLS	**EXHIBIT**

IF SHEET MEASURES LESS THAN 22"X34", IT IS A REDUCED PRINT. REDUCE SCALE ACCORDINGLY

bcra
T 253.627.4367 F 253.627.4395 WWW.BCRADESIGN.COM
2106 PACIFIC AVENUE, SUITE 300, TACOMA, WA 98402

SEAL

PROJECT
PORT OF EVERETT
WINE WALK BUILDING A12
XXXX SEINER DRIVE
EVERETT, WASHINGTON 98201

REVISIONS

DATE
12.14.2023
BCRA NO.
23045.00.00
DRAWN BY: AT, JC
REVIEWED BY: DD
SHEET TITLE
ZONING CODE SUMMARY

bcra
© COPYRIGHT 2023 - BCRA, INC. ALL RIGHTS RESERVED

SHEET
G-201
PROGRESS SET

22x34
12/14/2023 4:15:28 PM

APPLICABLE CODE

EVERETT MUNICIPAL CODE (EMC)
2018 INTERNATIONAL BUILDING CODE (IBC), WAC 51-50
2018 WASHINGTON STATE ENERGY CODE - COMMERCIAL (WSEC-C)
2018 INTERNATIONAL MECHANICAL CODE (IMC) & WAC 51-52
2018 UNIFORM PLUMBING CODE (UPC), WAC 51-56, 51-50-2900
2017 NATIONAL ELECTRICAL CODE (NFPA 70 - 2020) & WAC 51-54
2018 INTERNATIONAL FIRE CODE (IFC) & WAC 51-54A 2021
2009 ICC A117.1

IBC 2018 INTERNATIONAL BUILDING CODE (WA AMENDMENTS)-

PORT OF EVERETT / BUILDING A12

LEVEL 1: 7,656 GSF
LEVEL 2: 7,499 GSF
TOTAL: 15,155 GSF

OCCUPANCY GROUP:
LEVEL 1: BUSINESS GROUP B (BEAUTY SHOP / *SALON*)
LEVEL 2: BUSINESS GROUP B (BEAUTY SHOP / *SALON*)

CONSTRUCTION TYPE VB – SPRINKLERED
ALLOWABLE HEIGHT: TABLE 504.3:

OCCUPANCY A-2 – SPRINKLERED: 60 FT

ALLOWABLE STORIES ABOVE GRADE PLANE: TABLE 504.4

OCCUPANCY A-2, TYPE V-B SPRINKLERED: 2 STORIES

SEC. 506.2 ALLOWABLE AREA DETERMINATION
ALLOWABLE AREA FACTOR TABLE 506.2:

OCCUPANCY A-2, TYPE V-B SM: 18,000 SF

SEC. 506.2.4 MIXED-OCCUPANCY, MULTISTORY BUILDINGS.

SEC. 506.3.3 AMOUNT OF INCREASE.

AREA INCREASE NOT NEEDED, GROSS BUILDING SQUARE FOOTAGE IS LESS THAN THE BASE ALLOWABLE AREA FOR A SPRINKLERED BUILDING OF THIS OCCUPANCY AND CONSTRUCTION TYPE

REQUIRED SEPARATION OF OCCUPANCIES (HOURS) TABLE 508.4

OCCUPANCY A – B: 1 HOUR

TABLE 601 FIRE RESISTANCE RATING REQMTS FOR BUILDING ELEMENTS (HOURS)
BUILDING ELEMENT TYPE V-B
PRIMARY STRUCTURAL FRAME: 0
EXTERIOR BEARING BALL: 0
INTERIOR BEARING WALL: 0
EXTERIOR NONBEARING WALLS AND PARTITIONS: SEE TABLE 602
INTERIOR NONBEARING WALLS AND PARTITIONS: 0
FLOOR CONSTRUCTION AND SECONDARY MEMBERS: 0
ROOF CONSTRUCTION AND SECONDARY MEMBERS: 0

TABLE 602 FIRE RESISTANCE RATING REQMTS FOR EXTERIOR WALLS BASED ON FIRE SEPARATION DISTANCE

FIRE SEPARATION DISTANCE = (FEET)	CONSTRUCTION TYPE V-B OCCUPANCY GROUP B
X < 5	1
5 ≤ X < 10	1
10 ≤ X <30	0
X ≥ 30	0

FIRE AND SMOKE PROTECTION FEATURES

SHAFT ENCLOSURES REQUIRED (713): OPENINGS THROUGH FLOOR\CEILING ASSEMBLY SHALL BE PROTECTED BY A SHAFT ENCLOSURE
SHAFT ENCLOSURE SHALL HAVE A FIRE-RESISTANCE RATING OF NOT LESS THAN 1-HOUR WHERE CONNECTING LESS THAN FOUR STORIES.

WHERE EXTERIOR WALLS SERVE AS A PART OF A REQUIRED SHAFT ENCLOSURE, SUCH WALLS SHALL COMPLY WITH THE REQUIREMENTS OF SECTION 705 FOR EXTERIOR WALL AND THE FIRE-RESISTANCE-RATED ENCLOSURE REQUIREMENTS SHALL NOT APPLY.

OPENINGS IN A SHAFT ENCLOSURE SHALL BE PROTECTED IN ACCORDANCE WITH SECTION 716 AS REQUIRED FOR FIRE BARRIER. OPENINGS OTHER THAN THOSE NECESSARY FOR THE PURPOSE OF THE SHAFT SHALL NOT BE PERMITTED IN SHAFT ENCLOSURES.

SHAFTS SHALL BE ENCLOSED AT THE TOP WITH CONSTRUCTION OF THE SAME FIRE RESISTANCE RATING FOR THE ENCLOSURE.

PENETRATIONS (714.6.2) NONFIRE-RESISTANCE RATED ASSEMBLIES.
PENETRATING ITEMS THAT CONNECT NOT MORE THAN 2 STORIES ARE PERMITTED, PROVIDED THAT THE ANNULAR SPACE IS FILLED WITH AN APPROVED MATERIAL TO RESIST THE FREE PASSAGE OF FLAME AND THE PRODUCTS OF COMBUSTION

INTERIOR FINISHES

INTERIOR FINISH RATINGS (TABLE 803.13): GROUP B/E - SPRINKLERED
EXITS = B
CORRIDORS = C
ROOMS = C

FIRE PROTECTION SYSTEMS

AUTOMATIC SPRINKLER SYSTEMS: INSTALL PER 903.3 AND NFPA 13
OVERHANGS < 4'-0 SHALL NOT BE REQUIRED TO BE SPRINKLED.

PORTABLE FIRE EXTINGUISHERS (TABLE 906.3(1)): WHERE REQUIRED FOR CLASS A FIRE HAZARDS: LOW HAZARD OCCUPANCY, MINIMUM 2-A RATED EXTINGUISHER, MINIMUM 1 PER 3,000 SF & MAXIMUM TRAVEL DISTANCE OF 75'-0".

FIRE ALARM AND DETECTION (907.2.2): MANUAL FIRE ALARM BOXES ARE NOT REQUIRED WHERE THE BUILDING IS EQUIPPED THROUGHOUT WITH AN AUTOMATIC SPRINKLER SYSTEM INSTALLED IN ACCORDANCE WITH SECTION 903.3.1.1 AND THE OCCUPANT NOTIFICATION APPLIANCES WILL ACTIVATE THROUGHOUT THE NOTIFICATION ZONES UPON SPRINKLER WATER FLOW.

FIRE ALARM AND DETECTION (907.2.): WHERE OTHER SECTIONS OF THIS CODE ALLOW ELIMINATION OF FIRE ALARM BOXES DUE TO SPRINKLERS, A SINGLE FIRE ALARM BOX SHALL BE INSTALLED.

MEANS OF EGRESS

MAXIMUM FLOOR AREA ALLOWANCES PER OCCUPANT (1004):

FUNCTION OF SPACE	FLOOR AREA (SF) PER OCCUPANT
ASSEMBLY - UNCONCENTRATED (A-2)	15 SF NET

POSTING OF OCCUPANT LOAD: SEE SHEET G-301 FOR OCCUPANCY CALCULATIONS

MEANS OF EGRESS SIZING (1005): STAIRWAY = 0.3 INCHES PER OCCUPANT
OTHER COMPONENTS = .02 INCHES PER OCCUPANT

SEE SHEET G-301 FOR EGRESS SIZING CALCULATION

MINIMUM NUMBER OF EXITS PER STORY (TABLE 1006.3.2): 2 (<500 OCC PER STORY)

EXIT ACCESS DOORWAY CONFIGURATION (1007.1.1 EXCEPTION 2): WHERE 2 EXIT ACCESS DOORWAYS ARE REQUIRED AND THE BUILDING IS EQUIPPED THROUGHOUT WITH AN AUTOMATIC SPRINKLER SYSTEM IN ACCORDANCE WITH SECTION 903.3.1.1, THEY SHALL BE PLACED AT A DISTANCE NOT LESS THAN 1/3 THE MAXIMUM OVERALL DIAGONAL DIMENSION OF THE BUILDING OR AREA TO BE SERVED

ACCESSIBLE MEANS OF EGRESS (1009.2): CONTINUITY AND COMPONENTS: EACH REQUIRED ACCESSIBLE MEANS OF EGRESS SHALL BE CONTINUOUS TO A PUBLIC WAY.

AREAS OF REFUGE (1009.3.3) 1009.3.3 EXCEPTION #2. AREAS OF REFUGE ARE NOT REQUIRED AT STAIRWAYS IN BUILDING EQUIPPED THROUGHOUT WITH AN AUTOMATIC SPRINKLER SYSTEM IN ACCORDANCE WITH 903.3.1.1 OR 903.3.1.2

DOORS (1010.1.2) EGRESS DOORS SHALL BE OF THE PIVOTED, SIDE-HINGE SWINGING, OR BALANCED DOOR TYPES. DOORS SHALL SWING IN THE DIRECTION OF EGRESS TRAVEL WHERE SERVING A ROOM OR AREA CONTAINING AN OCCUPANT LOAD OF 50 OR MORE.

LANDINGS AT DOORS (1010.1.6) LANDINGS SHALL HAVE A WIDTH NOT LESS THAN THE WIDTH OF THE STAIRWAY OR THE DOOR , WHICHEVER IS GREATER. DOORS IN THE FULLY OPEN POSITION SHALL NOT REDUCE A REQUIRED DIMENSION BY MORE THAN 7". WHEN A LANDING SERVES AN OCCUPANT LOAD OF 50 OR MORE, DOOR IN ANY POSITION SHALL NOT REDUCE THE LANDING TO LESS THAN ONE-HALF ITS REQUIRED WIDTH. LANDINGS SHALL HAVE A LENGTH MEASURED IN THE DIRECTION OF TRAVEL OF NOT LESS THAN 44".

STAIRWAYS (1011.2) CLEAR WIDTH OF 44" MINIMUM. EXCEPTION 1: STAIRWAYS SERVING AND OCCUPANT LOAD OF LESS THAN 50 SHALL HAVE A WIDTH OF NOT LESS THAN 36".

ENCLOSURES UNDER INTERIOR STAIRWAYS (1011.7.3) THE WALLS AND SOFFITS WITHIN ENCLOSED USABLE SPACE UNDER ENCLOSED AND UNENCLOSED STAIRWAYS SHALL BE PROTECTED BY 1-HOUR FIRE-RESISTANCE-RATED CONSTRUCTION.

HANDRAIL HEIGHT (1014.2) HANDRAIL HEIGHT, MEASURED ABOVE STAIR TREAD NOSING, OR FINISH SURFACE OF RAMP SLOPE , SHALL BE UNIFORM, NOT LESS THAN 34 INCHES AND NOT MORE THAN 38 INCHES.

GUARDS (1015.2) REQUIRED ALONG OPEN SIDED WALKING SURFACES THAT ARE MORE THAN 30 INCHES MEASURED VERTICALLY WITHIN 36 INCHES MEASURED HORIZONTALLY TO THE EDGE OF AN OPEN SIDE. GUARD HEIGHT SHALL BE NOT LESS THAN 42 INCHES.

EXIT ACCESS TRAVEL DISTANCE (TABLE 1017.2) FOR OCCUPANCY TYPES B = 300 FEET MAX TRAVEL DISTANCE FOR SPRINKLERED BUILDINGS.

CORRIDORS (1020) TABLE 1020.1 - CORRIDOR FIRE-RESISTANCE RATING = 0
TABLE 1020.2 - MINIMUM CORRIDOR WIDTH IS 44 INCHES, FOR OCCUPANT LOADS LESS THAN 50: 36 INCHES

INTERIOR EXIT STAIRWAYS (1023.2) INTERIOR EXIT STAIRWAY AND RAMP ENCLOSURES SHALL HAVE A FIRE-RESISTANCE RATING OF NOT LESS THAN 1 HOUR WHERE CONNECTING LESS THAN FOUR STORIES.

EXIT DISCHARGE (1028.1 EXCEPTION 1) NOT MORE THAN 50 PERCENT OF THE NUMBER AND MINIMUM WIDTH OF REQUIRED CAPACITY OF INTERIOR EXIT STAIRWAYS AND RAMPS IS PERMITTED TO EGRESS THROUGH AREAS, INCLUDING ATRIUMS, ON THE LEVEL OF DISCHARGE PROVIDED THAT ALL OF THE FOLLOWING CONDITIONS ARE MET: *ALL APPLICABLE CONDITIONS ARE MET*

ELEVATOR SYSTEMS

HOISTWAY ENCLOSURE PROTECTION (3002.1) ELEVATOR ENCLOSURES SHALL BE SHAFT ENCLOSURES COMPLYING WITH SECTION712 AND 713. 1 HOUR FIRE-RESISTANCE RATING REQUIRED.

OPENING PROTECTIVES (3002.1.1) OPENINGS IN HOISTWAY ENCLOSURES SHALL BE PROTECTED AS REQUIRED IN CHAPTER 7.

EMERCENCY SIGNS (3002.3) AN APPROVED PICTORIAL SIGN OF A STANDARDIZED DESIGN SHALL BE POSTED ADJACENT TO EACH ELEVATOR CALL STATION ON ALL FLOORS INSTRUCTING OCCUPANTS TO USE THE EXIT STAIRWAYS AND NOT TO USE THE ELEVATORS IN CASE OF FIRE. THE SIGN SHALL READ: IN CASE OF FIRE, ELEVATORS ARE OUT OF SEVICE. USE STAIRS.

ACCESSIBILITY

ACCESSIBLE ROUTES (IBC 1104) ACCESSIBLE ROUTES WITHIN THE SITE SHALL BE PROVIDED FROM PUBLIC TRANSPORTATION STOPS; ACCESSIBLE PARKING; ACCESSIBLE PASSENGER LOADING ZONES; AND PUBLIC STREETS OR SIDEWALKS TO THE ACCESSIBLE BUILDING ENTRANCE SERVED.

EMPLOYEE WORK AREAS SPACES AND ELEMENTS WITHIN EMPLOYEE WORK AREAS SHALL ONLY BE REQUIRED TO COMPLY WITH SECTION 907.5.2.3, 1009, AND 1104.3.1) AND SHALL BE DESIGNED SO THAT INDIVIDUALS WITH DISABILITIES CAN APPROACH, ENTER AND EXIT THE WORK AREA.

ANSI A117.1 2009 REFER TO A-501 SHEETS FOR TYPICAL ACCESSIBILITY REQUIREMENTS

WAC 51-50-0429

429.2 REQUIRED ELECTRIC VEHICLE CHARGING INTRASTRUCTURE. WHERE PARKING IS PROVIDED, TEN PERCENT OF PARKING SPACES SHALL BE PROVIDED WITH ELECTRIC VEHICLE CHARGING INFRASTRUCTURE IN COMPLIANCE WITH SECTIONS 429.3, 429.4 AND 429.5. WHEN THE CALCULATION OF PERCENT SERVED RESULTS IN A FRACTIONAL PARKING SPACE, THE APPLICANT SHALL ROUND UP TO THE NEXT WHOLE NUMBER.

WAC 51-50-2902

2902.3.3 LOCATION OF TOILET FACILITIES IN OCCUPANCIES OTHER THAN MALLS. IN OCCUPANCIES OTHER THAN COVERED AND OPEN MALL BUILDINGS, THE REQUIRED PUBLIC AND EMPLOYEE TOILET FACILITIES SHALL BE LOCATED IN EACH BUILDING NOT MORE THAN ONE STORY ABOVE OR BELOW THE SPACE REQUIRED TO BE PROVIDED WITH TOILET FACILITIES, OR CONVENIENTLY IN A BUILDING ADJACENT THERETO ON THE SAME PROPERTY, AND THE PATH OF TRAVEL TO SUCH FACILITIES SHALL NOT EXCEED A DISTANCE OF 500 FEET (152 M).

EXCEPTION:
THE LOCATION AND MAXIMUM DISTANCES OF TRAVEL TO REQUIRED EMPLOYEE FACILITIES IN FACTORY AND INDUSTRIAL OCCUPANCIES ARE PERMITTED TO EXCEED THAT REQUIRED BY THIS SECTION, PROVIDED THAT THE LOCATION AND MAXIMUM DISTANCE OF TRAVEL ARE APPROVED.

PLUMBING FIXTURE COUNT:

TOTAL BUILDING OCCUPANT LOAD = 976

A-2 OCCUPANCY = 15 SF NET

WC	LAV
M: 488/75 = 7	M: 488/200 = 3
F: 488/75 = 7	F: 488/200 = 3

TOTAL REQUIRED

WC	LAV
M: 7	M: 3
F: 7	F: 3

TOTAL PROVIDED (> ALLOWABLE)

WC	LAV	
M: 7	M:	6
F: 8	F:	6

DRINKING FOUNTAINS
976 TOTAL OCCUPANTS
1/150, 1/500 FOR THE REMAINDER OF OCCUPANTS = 3 DRINKING FOUNTAINS REQUIRED
2 DRINKING FOUNTAINS PROVIDED>REQUIRED

2902.5.1.2: A DRINKING FOUNTAIN NEED NOT BE PROVIDED IN A DRINKING OR DINING ESTABLISHMENT

- ALL TENANTS ARE DRINKING OR DINING ESTABLISHMENTS

WASHINGTON STATE ENERGY CODE

MINIMUM REQUIREMENT FOR OPAQUE THERMAL ENVELOPE INSULATION COMPONENT (TABLE C402.1.3)
CLIMATE ZONE: 5 AND MARINE 4
GROUP: ALL OTHER

INSULATION ENTIRELY ABOVE DECK	R-38CI
WOOD FRAMED AND OTHER	R-21 INT
UNHEATED SLAB-ON-GRADE FLOORS	R-10 FOR 24" BELOW
NONSWINGING OPAQUE DOORS	R-4.75

BUILDING ENVELOPE FENESTRATION MAXIMUM U-FACTOR AND SHGC REQUIREMENT (TABLE C402.2)

FIXEX U-FACTOR	0.38
OPERABLE U-FACTOR	0.40
ENTRANCE DOORS U-FACTOR	0.60
ALL OTHER U-FACTOR	0.30

SHGC FOR ALL VERTICAL FENESTRATION

	SEW	N
PF < 0.2	0.38	0.51
0.2 ≤ PF < 0.5	0.46	0.56
PF ≥ 0.5	0.61	0.61

EFFICIENCY PACKAGES (TABLE C406.1)

	GROUP M	GROUP A (ALL OTHER)
1. MORE EFFICIENT HVAC	1.0	2.0
4. ENHANCED LIGHTING CONTROL	1.0 (TI)	0.0
7. HIGH PERFORMANCE DOAS	4.0	4.0
TOTAL	6.0	6.0

SOLAR READINESS (C411) A SOLAR ZONE SHALL BE PROVIDED ON NON-RESIDENTIAL BUILDING THAT ARE 20 STORIES OR LESS IN HEIGHT ABOVE GRADE PLANE.

THE MINIMUM AREA OF THE SOLOAR ZONE SHALL BE DETERMINED BY ONE OF THE FOLLOWING METHODS, WHICHEVER RESULTS IN THE SMALLER AREA:
1. 40% OF ROF AREA. THE ROOF AREA SHALL BE CALCULATED AS THE HORIZONTALLY-PROJECTED GROSS ROOF AREA LESS THE AREA COVERED BY SKYLIGHTS, OCCUPIED ROOF DECKS AND PLANTED AREAS.
2. 20% OF ELECTRICAL SERVICE SIZE. THE ELECTRICAL SERVICE SIZE IS THE RATED CAPACITY OF THE TOTAL OF ALL ELECTRICAL SERVICES TO THE BUILDING, AND THE REQUIRED SOLAR ZONE SIZE SHALL BE BASED UPON 10 PEAK WATTS OF PHOTOVOLTAIC PER SQUARE FOOT.

bcra
T 253.627.4367 F 253.627.4395 WWW.BCRADESIGN.COM
2106 PACIFIC AVENUE, SUITE 300, TACOMA, WA 98402

SEAL

PROJECT
PORT OF EVERETT
WINE WALK BUILDING A12
XXXX SEINER DRIVE
EVERETT, WASHINGTON 98201

REVISIONS

DATE 12.14.2023
BCRA NO. 23045.00.00
DRAWN BY: AT, KM
REVIEWED BY: DD
SHEET TITLE
BUILDING CODE SUMMARY

bcra
© COPYRIGHT 2023 - BCRA, INC. ALL RIGHTS RESERVED

SHEET
G-202
PROGRESS SET

22x34 12/14/2023 4:15:28 PM

IF SHEET MEASURES LESS THAN 22"X34", IT IS A REDUCED PRINT. REDUCE SCALE ACCORDINGLY

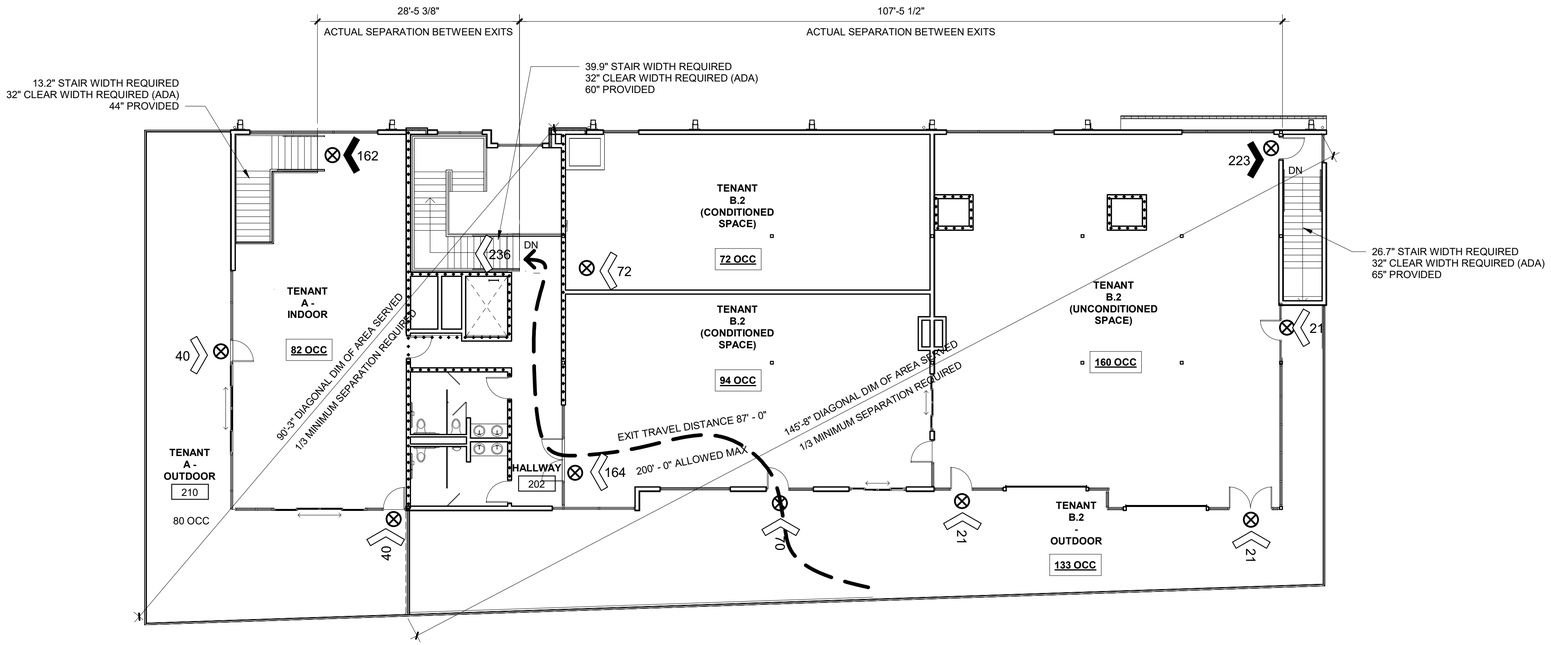

2 LIFE SAFETY PLAN - SECOND FLOOR

3/32" = 1'-0"

0 5 10 20
SCALE: 3/32" = 1'-0"
TRUE NORTH

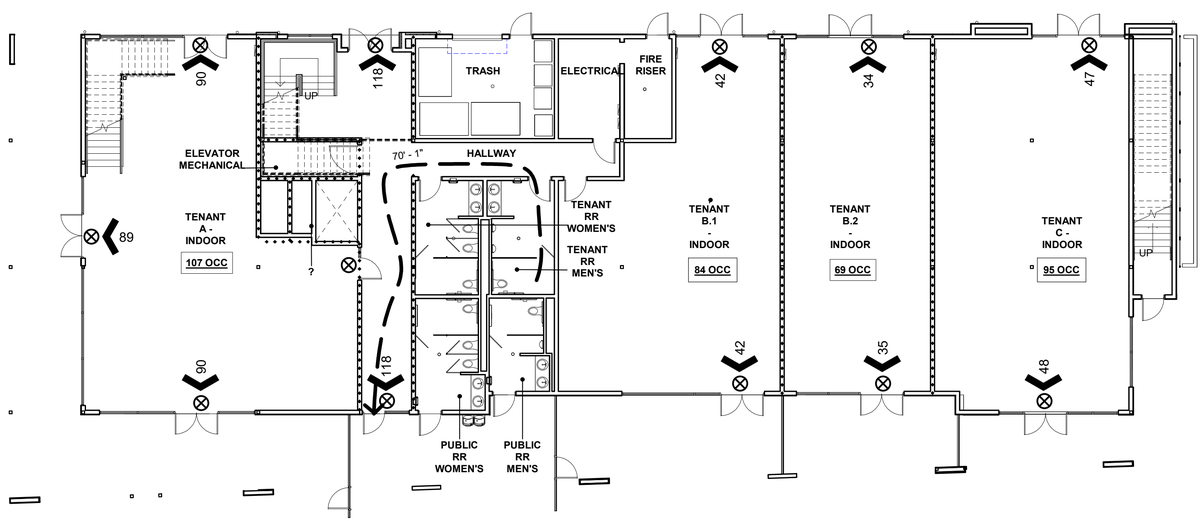

1 LIFE SAFETY PLAN - FIRST FLOOR

3/32" = 1'-0"

0 5 10 20
SCALE: 3/32" = 1'-0"
TRUE NORTH

LIFE SAFETY GENERAL NOTES

1. ALL CORRIDOR WALLS ARE TO BE 1-HR RATED, UNLESS NOTED OTHERWISE.
2. REFER TO PLANS AND A-621 FOR FIRE-RATED WALL CONSTRUCTION.
3. REFER TO PLANS, SECTIONS AND A-622 FOR FIRE-RATED FLOOR, CEILING AND ROOF CONSTRUCTION.

LIFE SAFETY PLAN LEGEND

- 1-HOUR RATED WALL
- 135 — EXIT OCCUPANT LOAD - BUILDING
- 62 — EXIT OCCUPANT LOAD - ROOM / AREA
- EXIT LIGHT - REFER ALSO TO ELECTRICAL
- TRAVEL DISTANCE PATH
- 72'-0" — TRAVEL DISTANCE

OCCUPANCY PER TENANT

A-2 OCCUPANCY

TENANT A -	269 OCC
TENANT B.1 -	84 OCC
TENANT B.2 -	528 OCC
TENANT C -	95 OCC
TOTAL OCCUPANCY:	**976 OCC**

bcra
T 253.627.4367 F 253.627.4395 WWW.BCRADESIGN.COM
2106 PACIFIC AVENUE, SUITE 300, TACOMA, WA 98402

SEAL

PROJECT
PORT OF EVERETT
WINE WALK BUILDING A12
XXXX SEINER DRIVE
EVERETT, WASHINGTON 98201

REVISIONS

DATE
12.14.2023
BCRA NO.
23045.00.00
DRAWN BY: Author
REVIEWED BY:
SHEET TITLE
LIFE SAFETY PLANS

bcra
© COPYRIGHT 2023 - BCRA, INC. ALL RIGHTS RESERVED
SHEET
G-301
PROGRESS SET

Z2x34 12/14/2023 4:15:31 PM

IF SHEET MEASURES LESS THAN 22"X34", IT IS A REDUCED PRINT. REDUCE SCALE ACCORDINGLY

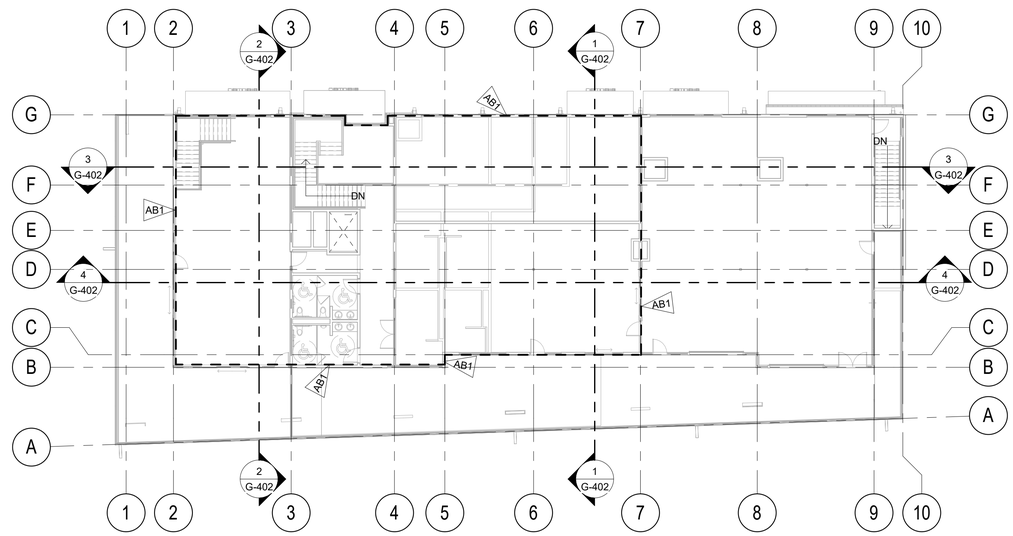

2 AIR BARRIER BOUNDARY PLAN - SECOND FLOOR

1/16" = 1'-0"

0 8 16 32 TRUE NORTH

SCALE: 1/16" = 1'-0"

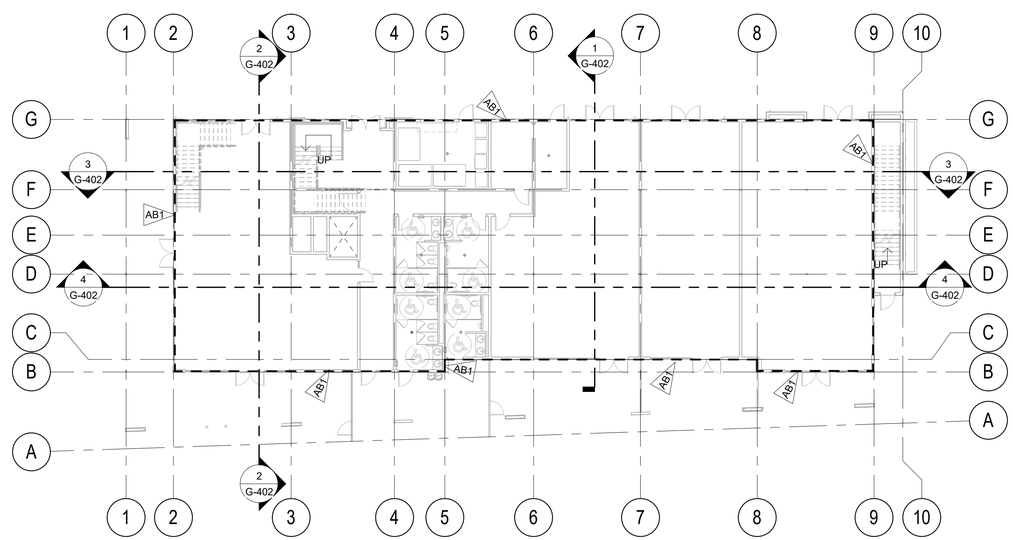

1 AIR BARRIER BOUNDARY PLAN - FIRST FLOOR

1/16" = 1'-0"

0 8 16 32 TRUE NORTH

SCALE: 1/16" = 1'-0"

AIR BARRIER SYSTEM GENERAL NOTES

PLANS AND SECTIONS ARE DIAGRAMMATIC AND INTENDED ONLY TO SHOW WHOLE BUILDING AIR BARRIER SYSTEM PRESSURE BOUNDARY TO BE TESTED. REFER TO BUILDING PLANS, ASSEMBLIES, SECTIONS, AND DETAILS FOR ACTUAL AIR BARRIER SYSTEM LOCATIONS AND EXTENTS.

BUILDING AIR BARRIER SYSTEM PERFORMANCE REQUIREMENT

1. INSTALL A CONTINUOUS AIR BARRIER SYSTEM (**PRESSURE BOUNDARY**) OVER THE ENTIRE EXTERIOR ENVELOPE (ROOF, WALLS AND FLOORS) SEPARATING THE INTERIOR CONDITIONED AIR FROM THE EXTERIOR, UNCONDITIONED AIR, WITH THE LEAKAGE RATE NOT EXCEEDING 0.40 CFM PER SQUARE FOOT OF EXTERIOR ENVELOPE AREA AT 75 Pa OR 0.3 Wg. THE CONTINUOUS BUILDING AIR BARRIER SYSTEM INCLUDES AIRTIGHT CONNECTIONS TO ANY PENETRATIONS, WINDOWS, DOORS, LOUVERS AND BETWEEN ADJACENT DIFFERENT TYPES OR AIR BARRIER SYSTEMS.
2. REFER TO ARCHITECTURAL DETAILS AND MANUFACTURER'S DETAILS (AND INSTALLATION INSTRUCTIONS) FOR AIR BARRIER SYSTEM CONNECTION DETAILS.
3. SEAL ALL PENETRATIONS, HOLES AND GAPS IN THE AIR BARRIER SYSTEM AIRTIGHT.
4. CONNECT THE ROOF, WALL AND FLOOR AIR BARRIER SYSTEMS AIRTIGHT.

AIR BARRIER BOUNDARY LEGEND

PRESSURE BOUNDARY OUTLINE

AIR BARRIER BOUNDARY FLAG NOTES

AB1	EXTERIOR WALL:	SHEET APPLIED AIR & BARRIER SYSTEM
AB2	GROUND FLOOR:	CONCRETE SLAB-N-GRADE WITH UNDERSLAB VAPOR RETARDER
AB3	ROOF:	AIR/VAPOR RETARDER SYSTEM ON UNDERSIDE OF ROOF FRAMING
AB4	SECOND FLOOR:	AIR/VAPOR RETARDER SYSTEM

bcra
T 253.627.4367 F 253.627.4395 WWW.BCRADESIGN.COM
2106 PACIFIC AVENUE, SUITE 300, TACOMA, WA 98402

SEAL

PROJECT
PORT OF EVERETT
WINE WALK BUILDING A12
XXXX SEINER DRIVE
EVERETT, WASHINGTON 98201

REVISIONS

DATE
12.14.2023

BCRA NO.
23045.00.00

DRAWN BY: Author

REVIEWED BY:

SHEET TITLE
AIR BARRIER PRESSURE BOUNDARY PLAN

bcra

© COPYRIGHT 2023 - BCRA, INC. ALL RIGHTS RESERVED

SHEET
G-401

PROGRESS SET

22x34 12/14/2023 4:15:34 PM

IF SHEET MEASURES LESS THAN 22"X34", IT IS A REDUCED PRINT. REDUCE SCALE ACCORDINGLY

AIR BARRIER SYSTEM GENERAL NOTES

PLANS AND SECTIONS ARE DIAGRAMMATIC AND INTENDED ONLY TO SHOW WHOLE BUILDING AIR BARRIER SYSTEM PRESSURE BOUNDARY TO BE TESTED. REFER TO BUILDING PLANS, ASSEMBLIES, SECTIONS, AND DETAILS FOR ACTUAL AIR BARRIER SYSTEM LOCATIONS AND EXTENTS.

BUILDING AIR BARRIER SYSTEM PERFORMANCE REQUIREMENT

1. INSTALL A CONTINUOUS AIR BARRIER SYSTEM (**PRESSURE BOUNDARY**) OVER THE ENTIRE EXTERIOR ENVELOPE (ROOF, WALLS AND FLOORS) SEPARATING THE INTERIOR CONDITIONED AIR FROM THE EXTERIOR, UNCONDITIONED AIR, WITH THE LEAKAGE RATE NOT EXCEEDING 0.40 CFM PER SQUARE FOOT OF EXTERIOR ENVELOPE AREA AT 75 Pa OR 0.3 Wg. THE CONTINUOUS BUILDING AIR BARRIER SYSTEM INCLUDES AIRTIGHT CONNECTIONS TO ANY PENETRATIONS, WINDOWS, DOORS, LOUVERS AND BETWEEN ADJACENT DIFFERENT TYPES OR AIR BARRIER SYSTEMS.
2. REFER TO ARCHITECTURAL DETAILS AND MANUFACTURER'S DETAILS (AND INSTALLATION INSTRUCTIONS) FOR AIR BARRIER SYSTEM CONNECTION DETAILS.
3. SEAL ALL PENETRATIONS, HOLES AND GAPS IN THE AIR BARRIER SYSTEM AIRTIGHT.
4. CONNECT THE ROOF, WALL AND FLOOR AIR BARRIER SYSTEMS AIRTIGHT.

AIR BARRIER BOUNDARY LEGEND

- - - - - - - - - - PRESSURE BOUNDARY OUTLINE

AIR BARRIER BOUNDARY FLAG NOTES

AB1	EXTERIOR WALL:	SHEET APPLIED AIR & BARRIER SYSTEM
AB2	GROUND FLOOR:	CONCRETE SLAB-N-GRADE WITH UNDERSLAB VAPOR RETARDER
AB3	ROOF:	AIR/VAPOR RETARDER SYSTEM ON UNDERSIDE OF ROOF FRAMING
AB4	SECOND FLOOR:	AIR/VAPOR RETARDER SYSTEM

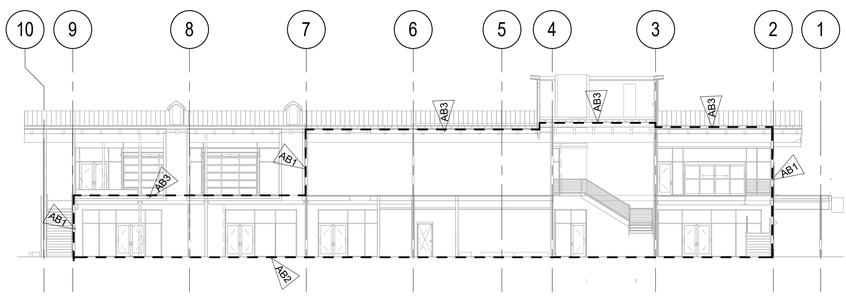

3 AIR BARRIER BOUNDARY SECTION - WEST
1/16" = 1'-0"

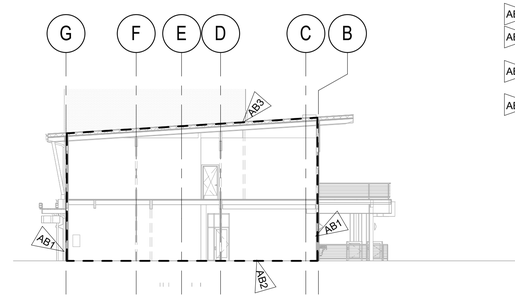

2 AIR BARRIER BOUNDARY SECTION - SOUTH
1/16" = 1'-0"

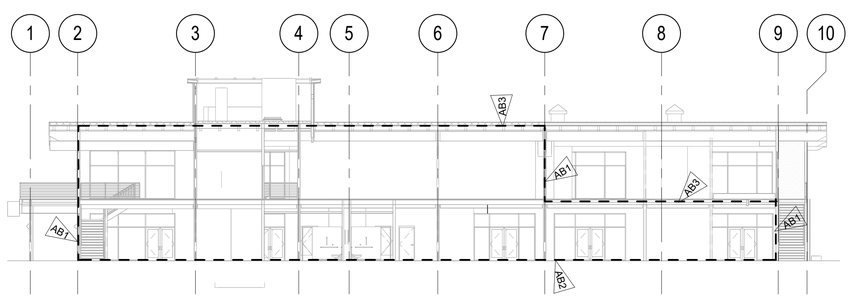

4 AIR BARRIER BOUNDARY SECTION - EAST
1/16" = 1'-0"

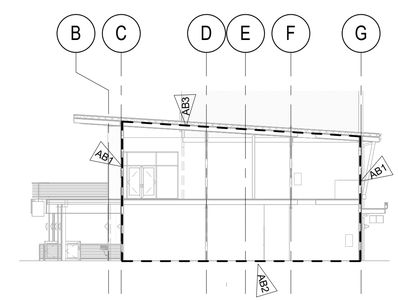

1 AIR BARRIER BOUNDARY SECTION - NORTH
1/16" = 1'-0"

0 8 16 32
SCALE: 1/16" = 1'-0"

bcra
T 253.627.4367 F 253.627.4395 WWW.BCRADESIGN.COM
2106 PACIFIC AVENUE, SUITE 300, TACOMA, WA 98402

SEAL

PROJECT
PORT OF EVERETT
WINE WALK BUILDING A12
XXXX SEINER DRIVE
EVERETT, WASHINGTON 98201

REVISIONS

DATE
12.14.2023
BCRA NO.
23045.00.00
DRAWN BY: Author
REVIEWED BY:
SHEET TITLE
AIR BARRIER PRESSURE BOUNDARY SECTIONS

bcra
© COPYRIGHT 2023 - BCRA, INC. ALL RIGHTS RESERVED
SHEET
G-402
PROGRESS SET

22x34 12/14/2023 4:19:38 PM

IF SHEET MEASURES LESS THAN 22"X34", IT IS A REDUCED PRINT. REDUCE SCALE ACCORDINGLY

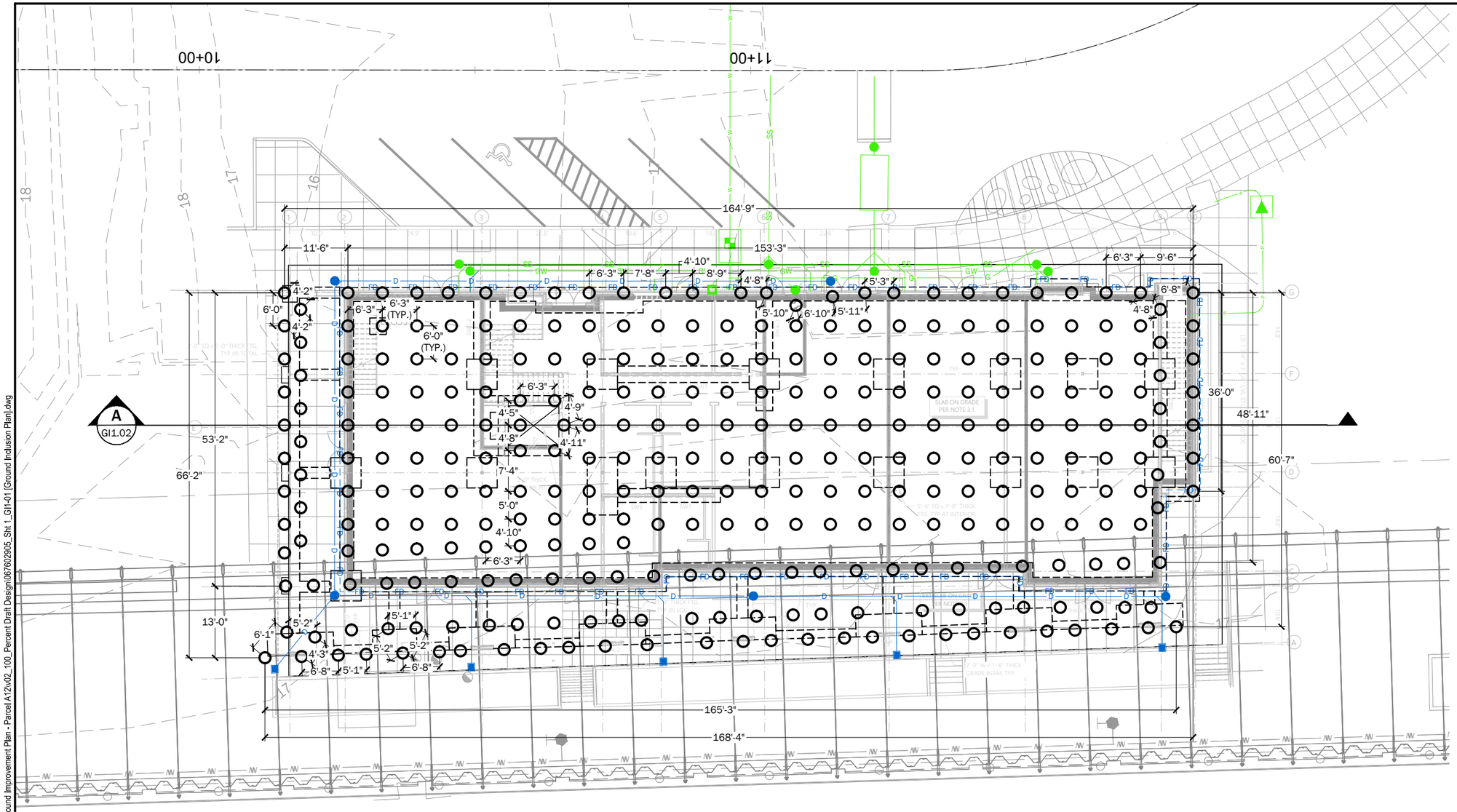

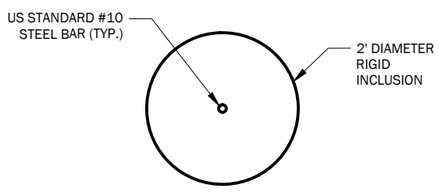

TYPICAL GROUND INCLUSION DETAIL

SCALE: 1" = 1'

GROUND INCLUSION PLAN

SCALE: 1" = 10'

0 10 20
GRAPHIC SCALE IN FEET

LEGEND

○ 2' DIAMETER RIGID INCLUSION

ESTIMATED RIGID INCLUSION TIP ELEVATION		
PARCEL ID	ESTIMATED TIP ELEVATION (FT.)	EMBEDMENT DEPTH *(FT.)
PARCEL A12	-22.1	3

* ALL ACTUAL TIP ELEVATIONS SHALL BE VERIFIED BY PORT APPOINTED GEOTECHNICAL SPECIAL INSPECTOR DURING CONSTRUCTION AND EXTEND A MINIMUM OF 3 FEET INTO THE NON-LIQUEFIABLE DENSE TO VERY DENSE LAYER.

VERTICAL DATUM IS NAVD88.

bcra
T 253.627.4367 F 253.627.4395 WWW.BCRADESIGN.COM
2106 PACIFIC AVENUE, SUITE 300, TACOMA, WA 98402

SEAL

KING H. CHIN — STATE OF WASHINGTON — 38704 — REGISTERED PROFESSIONAL ENGINEER — 10/13/23

GEOENGINEERS
WWW.GEOENGINEERS.COM

PROJECT
PORT OF EVERETT
WINE WALK BUILDING A12
XXXX SEINER DRIVE
EVERETT, WASHINGTON 98201

REVISIONS

DATE
12.13.2023

BCRA NO.
23045.00.00

DRAWN BY:

REVIEWED BY:

SHEET TITLE
GROUND INCLUSION PLAN

bcra
© COPYRIGHT 2023 - BCRA, INC. ALL RIGHTS RESERVED

SHEET
GI1.01

100% DD Set

IF SHEET MEASURES LESS THAN 22"X34", IT IS A REDUCED PRINT. REDUCE SCALE ACCORDINGLY

P:\0\0676029\CAD\05\Ground Improvement Plan - Parcel A12\v02_100_Percent Draft Design\06760290S_Sht 1_GI1-01 [Ground Inclusion Plan].dwg
Plotted: 12/14/2023, 10:00 | syi
22x34 12/14/2023 9:59 AM

CONSTRUCTION NOTES

RIGID INCLUSION INSTALLATION SHOULD BE COMPLETED IN GENERAL ACCORDANCE WITH THE BEST PRACTICES PER THE INDUSTRY AS DETAILED IN THE PROJECT SPECIFICATIONS. THE ANTICIPATED CONSTRUCTION SEQUENCING IS PRESENTED BELOW:

1. EXCAVATE TO THE TOP OF RIGID INCLUSIONS (REFER TO CIVIL DRAWINGS).
2. INSTALL RIGID INCLUSIONS ACCORDING TO PLANS AND SPECIFICATIONS TO THE TARGET DEPTH OR THE DEPTH REQUIRED TO ACHIEVE 3-FOOT EMBEDMENT INTO THE NON-LIQUEFIABLE DENSE TO VERY DENSE LAYER. THE TOP OF RIGID INCLUSIONS SHOULD BE COMPLETED WITHIN A TOLERANCE OF +/- 6 INCHES BASED ON THE TARGET TOP ELEVATION.
3. PLACE A 2-FOOT-THICK LAYER OF CRUSHED SURFACE BASE COURSE (CSBC) ON TOP OF RIGID INCLUSIONS AS LOAD TRANSFER PLATFORM (LTP).

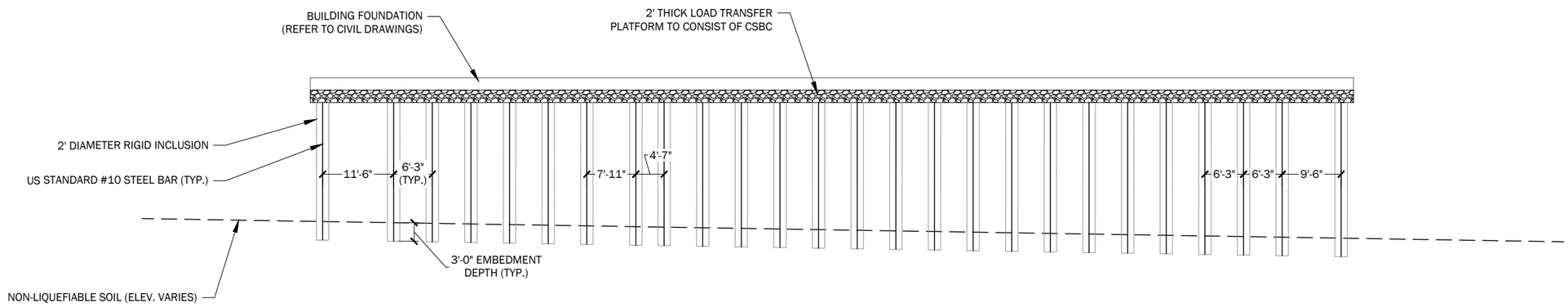

GROUND INCLUSION TYPCIAL SECTION A / GI1.02

SCALE: 1" = 10'

0 10 20

GRAPHIC SCALE IN FEET

VERTICAL SCALE: NOT TO SCALE

bcra
T 253.627.4367 F 253.627.4395 WWW.BCRADESIGN.COM
2106 PACIFIC AVENUE, SUITE 300, TACOMA, WA 98402

SEAL

KING H. CHIN — STATE OF WASHINGTON — 38764 — REGISTERED PROFESSIONAL ENGINEER — 10/13/23

GEOENGINEERS
WWW.GEOENGINEERS.COM

PROJECT
PORT OF EVERETT
WINE WALK BUILDING A12
XXXX SEINER DRIVE
EVERETT, WASHINGTON 98201

REVISIONS

DATE
12.13.2023

BCRA NO.
23045.00.00

DRAWN BY:

REVIEWED BY:

SHEET TITLE
GROUND INCLUSION TYPICAL SECTION

bcra

© COPYRIGHT 2023 - BCRA, INC. ALL RIGHTS RESERVED

SHEET
GI1.02

100% DD Set

IF SHEET MEASURES LESS THAN 22"X34", IT IS A REDUCED PRINT. REDUCE SCALE ACCORDINGLY

Plotted: 12/13/2023, 18:24 | syi P:\0\06760\29\CAD\05\Ground Improvement Plan - Parcel A12\v02_100_Percent Draft Design\06760290S_Sh 2_GI1-02 [Ground Inclusion Typcial Section].dwg
22x34 12/13/2023 6:05 PM

RIGID INCLUSIONS

PART 1 - GENERAL

1.1 DESCRIPTION

A. THE WORK SHALL CONSIST OF CONSTRUCTING RIGID INCLUSIONS AS SPECIFIED HEREIN AND AS SHOWN ON THE PLANS. THE WORK SHALL INCLUDE DRILLING AND CONSTRUCTING THE RIGID INCLUSIONS TO THE SPECIFIED DEPTH AND DIAMETER INDICATED ON THE PLANS.

B. THE CONTRACTOR AND SPECIALTY SUBCONTRACTORS (HEREAFTER REFERRED TO COLLECTIVELY AS THE CONTRACTOR UNLESS INDICATED OTHERWISE) ARE RESPONSIBLE FOR THE CONSTRUCTION MEANS AND METHODS AND CONTROL OF THE PROCESS OF THE WORK. THIS INCLUDES THE CONSTRUCTION SEQUENCE, THE SAFETY OF THE WORKERS, TEMPORARY HANDRAILS, EXCAVATION ACCESS, BARRIERS, LIFTING OF MATERIALS AND CONSTRUCTION EQUIPMENT INTO AND OUT OF THE EXCAVATION, TEMPORARY BRACING OF FORMWORK, THE STABILITY OF ALL TEMPORARY CUT SLOPES AND OTHER METHODS, TECHNIQUES, SEQUENCES OR PROCEDURES REQUIRED TO PERFORM THE WORK.

1.2 PRECONSTRUCTION MEETING

A. A PRECONSTRUCTION MEETING SHALL BE HELD PRIOR TO THE START OF THE WORK AND SHALL BE ATTENDED BY THE OWNER'S REPRESENTATIVES, THE GROUND IMPROVEMENT DESIGNER (HEREIN REFERRED TO AS DESIGNER) AND THE GEOTECHNICAL SPECIAL INSPECTOR, THE PRIME CONTRACTOR, THE EXCAVATION CONTRACTOR, THE GROUND IMPROVEMENT SPECIALTY SUBCONTRACTOR AND THE CITY REPRESENTATIVE. THE PRECONSTRUCTION MEETING SHALL BE CONDUCTED TO CLARIFY THE CONSTRUCTION REQUIREMENTS FOR THE WORK, TO COORDINATE THE CONSTRUCTION ACTIVITIES, AND TO IDENTIFY CONTRACTUAL RELATIONSHIPS AND RESPONSIBILITIES.

1.3 EXISTING SITE CONDITIONS AND UTILITIES

A. THE CONTRACTOR SHALL VISIT THE SITE PRIOR TO ANY CONSTRUCTION ACTIVITIES FOR THE PURPOSE OF OBSERVING AND DOCUMENTING THE PRECONSTRUCTION CONDITION OF ALL STRUCTURES, INFRASTRUCTURE, SIDEWALKS, ROADWAYS, AND ALL OTHER FACILITIES ADJACENT TO THE SITE. THE CONTRACTOR SHALL IMMEDIATELY NOTIFY THE OWNER'S REPRESENTATIVE AND THE DESIGNER IF SIGNS OF MOVEMENT SUCH AS NEW CRACKS, INCREASED SIZE OF OLD CRACKS OR SEPARATION OF JOINTS IN STRUCTURES, FOUNDATIONS, STREETS OR PAVED AND UNPAVED SURFACES ARE OBSERVED. THE CONTRACTOR SHALL PROVIDE THE DESIGNER WRITTEN DOCUMENTATION OF THE OBSERVED CONDITIONS WITHIN 24 HOURS OF INITIAL OBSERVATION.

B. RIGID INCLUSION LAYOUT AND ELEVATIONS ARE BASED ON TOPOGRAPHIC AND OTHER PROJECT INFORMATION PRESENTED IN THE PROJECT PLANS AND SPECIFICATIONS. THE CONTRACTOR SHALL VERIFY ALL DIMENSIONS, CONDITIONS AND ELEVATIONS BEFORE PROCEEDING. ANY DISCREPANCIES SHALL BE BROUGHT TO THE ATTENTION OF THE DESIGNER.

C. THE CONTRACTOR SHALL VERIFY THE LOCATION OF ANY AND ALL EXISTING TIEBACKS, DEADMAN SYSTEM, AND ETC. THAT WILL REMAIN IN PLACE. ANY CONFLICTS BETWEEN TIEBACK/DEADMAN LOCATIONS AND RIGID INCLUSION LOCATIONS WILL BE RESOLVED AS DIRECTED BY THE DESIGNER. THE CONTRACTOR SHALL SEEK APPROVAL OF THE DESIGNER TO SHIFT RIGID INCLUSION LOCATIONS TO AVOID CONFLICTS. THE CONTRACTOR SHALL BE RESPONSIBLE FOR ANY REPAIR/REPLACEMENT TO DAMAGED TIEBACK/DEADMAN DURING CONSTRUCTION.

D. THE PRIME CONTRACTOR SHALL VERIFY THE LOCATION OF ANY AND ALL EXISTING AND PROPOSED UTILITIES. ANY CONFLICTS BETWEEN UTILITY LOCATIONS AND RIGID INCLUSION LOCATIONS WILL BE RESOLVED AS DIRECTED BY THE DESIGNER. THE CONTRACTOR SHALL SEEK APPROVAL OF THE DESIGNER TO SHIFT RIGID INCLUSION LOCATIONS TO AVOID CONFLICTS. THE CONTRACTOR SHALL BE RESPONSIBLE FOR ANY REPAIR/REPLACEMENT TO DAMAGED UTILITY LINES DURING CONSTRUCTION.

E. THE PRIME CONTRACTOR IS RESPONSIBLE FOR ANY REMOVAL OF ABANDONED UTILITIES, FOUNDATION ELEMENTS, OR OTHER UNDERGROUND OBSTRUCTIONS THAT INTERFERE WITH THE RIGID INCLUSIONS.

1.4 SPECIAL INSPECTION

A. IN ACCORDANCE WITH THE LOCAL BUILDING CODE, SPECIAL INSPECTION SHALL BE PROVIDED BY THE OWNER FOR ALL RIGID INCLUSION INSTALLATION AND TESTING.

B. THE OWNER'S REPRESENTATIVE THAT IS PROVIDING THE GEOTECHNICAL SPECIAL INSPECTION SHALL BE A QUALIFIED FIELD REPRESENTATIVE APPOINTED BY THE PORT WITH EXPERIENCE MONITORING GROUND IMPROVEMENT CONSTRUCTION. ACCURATE RECORDS DOCUMENTING THE RIGID INCLUSION CONSTRUCTION SHALL BE MAINTAINED BY THE GEOTECHNICAL SPECIAL INSPECTOR. THE CONTRACTOR SHALL ASSIST THE GEOTECHNICAL SPECIAL INSPECTOR AS NECESSARY TO OBTAIN THE AS-BUILT RIGID INCLUSION LOCATIONS, ELEVATIONS, AND ALL OTHER INFORMATION AS REQUIRED BY THE OWNER AND DESIGNER. SPECIAL INSPECTION AND TESTING OF THE GROUT/CONCRETE SHALL BE PROVIDED BY A QUALIFIED MATERIALS TESTING AGENCY APPROVED BY THE DESIGNER.

1.5 QUALITY ASSURANCE

A. THE CONTRACTOR SHALL SUBMIT A REFERENCE LIST INDICATING THE SUCCESSFUL COMPLETION OF AT LEAST FIVE AUGERCAST PILE OR RIGID INCLUSION PROJECTS COMPLETED DURING THE LAST 3 YEARS. A BRIEF DESCRIPTION OF EACH PROJECT WITH THE OWNER'S NAME AND CURRENT PHONE NUMBER SHALL BE INCLUDED.

B. THE CONTRACTOR'S SUPERINTENDENT SHALL HAVE A MINIMUM OF 3 YEARS EXPERIENCE SUPERVISING AUGERCAST PILE OR RIGID INCLUSION INSTALLATION USING DRILLING METHODS AND THE DRILL OPERATORS AND ON-SITE SUPERVISORS SHALL HAVE A MINIMUM OF 1 YEAR EXPERIENCE INSTALLING AUGERCAST PILES OR RIGID INCLUSIONS. PRIOR TO STARTING THE WORK, THE CONTRACTOR SHALL SUBMIT A LIST IDENTIFYING THE SUPERINTENDENT, DRILL RIG OPERATORS, AND ON-SITE SUPERVISORS ASSIGNED TO THE PROJECT. THE LIST SHALL CONTAIN A SUMMARY OF EACH INDIVIDUAL'S EXPERIENCE AND SHALL BE SUFFICIENTLY COMPLETE FOR THE DESIGNER TO EVALUATE THE INDIVIDUAL'S QUALIFICATIONS. WORK SHALL NOT BE STARTED UNTIL WRITTEN APPROVAL OF THE CONTRACTOR'S QUALIFICATIONS IS GIVEN.

C. THE OWNER'S REPRESENTATIVE MAY SUSPEND THE WORK IF THE CONTRACTOR SUBSTITUTES NON-APPROVED PERSONNEL FOR APPROVED PERSONNEL.

1.6 SUBMITTALS

1.6.1 GENERAL SUBMITTAL SHALL BE PROVIDED BY THE CONTRACTOR FOR THE DESIGNER'S REVIEW AND APPROVAL. THE CONTRACTOR WILL NOT BE ALLOWED TO BEGIN CONSTRUCTION UNTIL ALL SUBMITTAL REQUIREMENTS ARE SATISFIED AND FOUND ACCEPTABLE TO THE DESIGNER. ALL SUBMITTALS SHALL BE PROVIDED AT LEAST 10 BUSINESS DAYS PRIOR TO INITIATING WORK.

1.6.2 CONSTRUCTION WORK PLAN AND DOCUMENTS

A. A DETAILED CONSTRUCTION SEQUENCE AND PLANNED START OF WORK DATE.

B. DRILLING METHODS AND EQUIPMENT.

C. GROUT/CONCRETE MIX DESIGNS FOR EACH GROUT/CONCRETE MIXTURE. SUBMIT ALTERNATIVE DESIGN MIXTURES WHEN CHARACTERISTICS OF MATERIALS, PROJECT CONDITIONS, WEATHER, TEST RESULTS, OR OTHER CIRCUMSTANCES WARRANT ADJUSTMENTS.

1. INDICATE AMOUNTS OF MIXING WATER TO BE WITHHELD FOR LATER ADDITION AT PROJECT SITE.

2. SUBMIT COMPRESSIVE STRENGTH TEST RESULTS FROM THE SUPPLIER NO OLDER THAN 6 MONTHS VERIFYING THE MINIMUM 7-DAY AND 28-DAY COMPRESSIVE STRENGTHS.

D. RIGID INCLUSION PLACEMENT PROCEDURES

PART 2 - WORK PLAN

2.1 DESCRIPTION OF WORK

A. THE WORK SHALL CONSIST OF ADVANCING HOLLOW-STEM, CONTINUOUS-FLIGHT AUGERS OF DESIGN DIAMETERS TO THE DEPTHS SPECIFIED ON THE PROJECT PLANS. A STABILIZING ARM SHALL BE USED AT BOTTOM OF LEADS TO PREVENT ROTATION. THE CONTRACTOR SHALL COMPLETE A QUALITY ASSURANCE/QUALITY CONTROL (QA/QC) PROGRAM THROUGHOUT THE COURSE OF THE WORK TO DEMONSTRATE THAT THE RIGID INCLUSION INSTALLATION IS PERFORMED IN ACCORDANCE TO THE REQUIREMENTS STATED HEREIN.

2.2 SITE CONDITIONS

A. THE OWNER HAS COMPLETED SUBSURFACE INVESTIGATIONS FOR THE PROJECT SITE. THE INFORMATION HAS BEEN USED AS THE BASIS OF THE RIGID INCLUSION DESIGN AS DESCRIBED IN THE PROJECT GROUND IMPROVEMENT DESIGN SERVICES REPORT.

B. THE CONTRACTOR SHOULD BE PREPARED TO COMPLETE INSTALLATION OF THE RIGID INCLUSIONS WITH THE PRESENCE OF GROUNDWATER. THE CONTRACTOR IS RESPONSIBLE FOR DEWATERING DESIGN, PERMITTING, AND ETC. AS NECESSARY.

C. THE CONTRACTOR SHALL VISIT THE SITE AND INDEPENDENTLY VERIFY ANY ACCESS- OR WORK-RELATED RESTRICTIONS.

2.3 SUBMITTALS

A. THE FOLLOWING SUBMITTALS WILL BE REQUIRED.

2.3.1 CONSTRUCTION WORK PLAN FOR DESIGNER'S APPROVAL PRIOR TO BEGINNING WORK .

A. A WRITTEN WORK PLAN FOR ACCOMPLISHING THE WORK DESCRIBED IN THIS SECTION AND SHOWN ON THE PLANS. THE WRITTEN PROCEDURE SHALL INCLUDE:

1. EQUIPMENT, PROCEDURES, AND MATERIALS TO BE USED FOR INSTALLATION OF RIGID INCLUSIONS. HOLLOW-STEM AUGER EQUIPMENT WITH DIMENSIONS AND CAPACITIES OF EQUIPMENT AND COMPONENTS; INSTRUMENTATION USED TO MEASURE AND PROCEDURES TO DETERMINE GROUT/CONCRETE QUANTITY PUMPED AND PUMPING RATE; AND HOSES AND PUMPS.

2. PROPOSED GROUT/CONCRETE VOLUME AND CALCULATIONS TO DEMONSTRATE THAT THE REQUIRED VOLUME OF GROUT/CONCRETE WILL BE ACHIEVED IN THE SITE SOILS WITHIN THE TREATMENT DEPTHS.

B. MIX DESIGN AND MIX PROCEDURES OF CEMENT GROUT/CONCRETE USED FOR RIGID INCLUSIONS INCLUDING GROUT/CONCRETE MATERIAL SOURCES, INCLUDING GRAIN SIZE DISTRIBUTION AND PLASTICITY INDEX OR HYDROMETER TESTS RESULTS OF THE AGGREGATE TO BE USED, CEMENT TYPE, WATER-CEMENT-AGGREGATE RATIO BY WEIGHT, AND ESTIMATED MINIMUM 7-DAY AND 28-DAY COMPRESSIVE STRENGTH.

C. A WRITTEN SCHEDULE FOR COMPLETING THE WORK DESCRIBED IN THIS SPECIFICATION AND SHOWN ON THE PLANS. THE SCHEDULE SHALL SHOW THE CONTRACTOR'S PLANNED NUMBER OF MACHINES, NUMBER OF SHIFTS, AND WORKING HOURS.

2.3.2 A QA/QC PROGRAM FOR RIGID INCLUSIONS FOR THE DESIGNER'S APPROVAL PRIOR TO STARTING WORK INCLUDING, BUT NOT LIMITED TO, THE FOLLOWING:

A. A DETAILED DESCRIPTION OF THE QA/QC PROGRAM TO BE UNDERTAKEN EACH DAY DURING PRODUCTION TO CONFIRM LOCATION OVER THE DEPTHS AND LIMITS SHOWN ON THE PLANS, HORIZONTAL AND VERTICAL ALIGNMENT TOLERANCES, AND REQUIRED VOLUME AND COMPRESSIVE STRENGTHS SPECIFIED HEREIN.

B. DETAILS OF THE PROCEDURES TO OBTAIN GROUT/CONCRETE SAMPLES. CATALOG CUTS OR SHOP FABRICATION DRAWINGS OF THE GROUT/CONCRETE SAMPLING DEVICE AND CURING BOXES.

C. MEASURES TO BE IMPLEMENTED EACH DAY DURING RIGID INCLUSION INSTALLATION TO CONTINUOUSLY MONITOR, MODIFY AND CONTROL GROUT/CONCRETE VOLUME, MONITORING EQUIPMENT CAPABLE OF MEASURING AUGER DEPTH, PENETRATION RATE, AND GROUT/CONCRETE VOLUME PUMPED PER UNIT DEPTH INCREMENT AND OF PRINTING RESULTS, HORIZONTAL AND VERTICAL ALIGNMENTS, AND OTHER RELATED ASPECTS OF THE RIGID INCLUSION INSTALLATION PROCESS.

D. GENERAL PLAN AND DESCRIPTION OF THE PROPOSED MONITORING OPERATIONS, INCLUDING METHODS TO OBTAIN AND RECORD MONITORING DATA AND COPIES OF PROPOSED MONITORING DATA FORMS OR REPORT FORMAT

E. EXAMPLE FORMAT OF DAILY PRODUCTION REPORTS CONFORMING TO THE REQUIREMENTS STATED HEREIN.

2.3.3 AFTER THE END OF A WORK SHIFT, SUBMIT DAILY PRODUCTION REPORTS FOR EACH WORK SHIFT TO THE DESIGNER. DAILY PRODUCTION REPORTS SHALL BE FILLED OUT, CHECKED FOR CORRECTNESS, AND SIGNED BY THE CONTRACTORS FIELD SUPERINTENDENT, AND THE GEOTECHNICAL SPECIAL INSPECTOR AT THE END OF EVERY WORK SHIFT. THE REPORTS SHALL CONTAIN, BUT NOT BE LIMITED TO, THE FOLLOWING INFORMATION:

A. DAY, MONTH, YEAR, TIME OF THE BEGINNING AND END OF THE WORK SHIFT; NAMES OF EACH SUPERINTENDENT IN-CHARGE OF THE WORK FOR THE RIGID INCLUSION INSTALLATION; AND A SUMMARY OF EQUIPMENT USED DURING THE SHIFT.

B. THE LOCATION AND LIMITS OF EACH COMPLETED RIGID INCLUSION INSTALLED DURING THE WORK SHIFT AND ALL RIGID INCLUSIONS COMPLETED TO-DATE ON A PLAN OF SUITABLE SCALE TO CLEARLY DETAIL THE LOCATIONS OF THE RIGID INCLUSIONS.

C. TIME OF BEGINNING AND COMPLETION OF EACH RIGID INCLUSION INSTALLED DURING THE WORK SHIFT.

D. WATER-CEMENT-AGGREGATE RATIOS, CEMENT TYPE, BRAND AND COMPOUND COMPOSITION, A RECORD OF CEMENT GROUT/CONCRETE VOLUMES AND RATES, OTHER PERTINENT CEMENT GROUT/CONCRETE MIX DATA, TOTAL INSTALLED DEPTH AND TIP ELEVATION FOR THE RIGID INCLUSION AND INSTALLATION SEQUENCE FOR EVERY RIGID INCLUSION.

E. OTHER PERTINENT OBSERVATIONS INCLUDING, BUT NOT LIMITED TO CEMENT GROUT/CONCRETE ESCAPES, GROUND SETTLEMENT OR HEAVE, COLLAPSE(S) OF THE GROUT/CONCRETE RIGID INCLUSION, ANY UNUSUAL BEHAVIOR OF ANY EQUIPMENT DURING THE RIGID INCLUSIONS PROCESS, AND OTHER NOTEWORTHY EVENTS. IN THE EVENT OF A CONTRACTOR CLAIM, THE DAILY PRODUCTION REPORTS SHALL BE THE PRIMARY DOCUMENTS TO SUBSTANTIATE THE REASONS AND BASIS FOR THE CLAIM.

F. DATE, TIME, PLAN LOCATION, SAMPLE DESIGNATION AND ELEVATION, AND OTHER DETAILS OF GROUT/CONCRETE SAMPLING.

G. MONITORING DATA FORMS OR REPORT.

H. SUMMARY OF ANY DOWNTIME OR UNPRODUCTIVE TIME, INCLUDING START AND END TIME, DURATION, AND REASON.

2.4 QUALITY ASSURANCE

A. TESTING

1. THE OWNER WILL EMPLOY THE SERVICES OF AN INDEPENDENT TESTING LABORATORY TO PROVIDE THE GROUT/CONCRETE TESTING, AS DESCRIBED BELOW IN THIS SPECIFICATION.

B. QA/QC PROGRAM

1. THE CONTRACTOR SHALL IMPLEMENT A QA/QC PROGRAM TO VERIFY THAT THE INSTALLED RIGID INCLUSIONS CONFORM TO THE REQUIREMENTS STATED HEREIN. THE QA/QC PROGRAM SHALL BE IMPLEMENTED AS PART OF THE WORK.

2. THE CONTRACTOR SHALL OBTAIN GROUT/CONCRETE SAMPLES AND PROVIDE THEM TO THE TESTING LABORATORY REPRESENTATIVE. THE REPRESENTATIVE WILL FORM, PRESERVE, CURE, TRANSPORT AND TEST THE GROUT/CONCRETE SAMPLES, AND REPORT THE TEST RESULTS. THE CONTRACTOR SHALL COOPERATE WITH TESTING LABORATORY AND COORDINATE SAMPLING ACTIVITIES WITH THE TESTING LABORATORY. THE CONTRACTOR SHALL SUPPLY INCIDENTAL ITEMS, ACCESS, INSIDE STORAGE SPACE, AND ELECTRICAL POWER TO THE CURING BOXES. THE TESTING LABORATORY WILL SUPPLY CURING BOXES, AND MOLDS FOR USE IN FORMING THE SAMPLES.

3. THE QA/QC PROGRAM SHALL INCLUDE DOCUMENTATION OF ALL OBSTRUCTIONS AND THE DISPOSITION OF HOW EACH OBSTRUCTION WAS OVERCOME.

4. GROUT/CONCRETE SAMPLES - TESTING OF SAMPLES OF FRESH GROUT/CONCRETE OBTAINED ACCORDING TO ASTM C172/C172M SHALL BE PERFORMED ACCORDING TO THE FOLLOWING REQUIREMENTS:

a. FLOW RATE - ASTM C939 AND ASTM C39/C39M USING A FLOW CONE WITH 0.75-INCH (19-MM) OPENING.

b. COMPRESSIVE STRENGTH - ASTM C39/C39M WITH CUBE SPECIMENS RESTRAINED FROM EXPANSION ACCORDING TO ASTM C942.

c. TESTING FREQUENCY - OBTAIN SIX 2-INCH (101-MM) CUBES FOR EACH 50 CUBIC YARD (38 CUBIC METER) OR FRACTION THEREOF OF GROUT/CONCRETE PLACED, BUT NOT LESS THAN ONE SET FOR EACH WORK SHIFT.

d. TEST TWO CUBES AT 7 DAYS, TWO CUBES AT 28 DAYS, AND HOLD TWO CUBES IN RESERVE.

e. STRENGTH OF EACH GROUT/CONCRETE MIXTURE IS SATISFACTORY IF EVERY AVERAGE OF ANY THREE CONSECUTIVE COMPRESSIVE-STRENGTH TESTS EQUALS OR EXCEEDS SPECIFIED COMPRESSIVE STRENGTH AND NO MORE THAN 15% OF THE COMPRESSIVE-STRENGTH TEST VALUE FALLS BELOW THE SPECIFIED COMPRESSIVE STRENGTH OF 4,000 PSI (27.6 MPA).

5. THE TESTING LABORATORY SHALL REPORT TEST RESULTS IN WRITING TO THE DESIGNER, GROUT/CONCRETE MANUFACTURER AND CONTRACTOR WITHIN 48 HOURS OF TESTING. LIST PROJECT IDENTIFICATION NAME AND NUMBER, DATE OF PLACEMENT, NAME OF TESTING AND INSPECTION AGENCY, LOCATION OF GROUT/CONCRETE BATCH IN WORK, DESIGN COMPRESSIVE STRENGTH AT 28 DAYS, GROUT/CONCRETE MIXTURE PROPORTIONS AND MATERIALS, COMPRESSIVE BREAKING STRENGTH AND TYPE OF BREAK FOR BOTH 7- AND 28-DAY TESTS IN REPORTS OF COMPRESSIVE-STRENGTH TESTS.

6. THE TESTING LABORATORY SHALL MAKE ADDITIONAL TESTS OF GROUT/CONCRETE IF TEST RESULTS INDICATE THAT COMPRESSIVE STRENGTHS OR OTHER REQUIREMENTS HAVE NOT BEEN MET, AS DIRECTED BY THE DESIGNER.

7. ADDITIONAL TESTING AND INSPECTION WILL BE PERFORMED TO DETERMINE COMPLIANCE OF REPLACED OR ADDITIONAL WORK WITH SPECIFIED REQUIREMENTS.

8. THE CONTRACTOR SHALL CORRECT DEFICIENCIES IN THE WORK THAT TEST REPORTS AND INSPECTIONS INDICATE DO NOT COMPLY WITH THE CONTRACT DOCUMENTS.

9. GROUT/CONCRETE VOLUME

a. EACH WORK SHIFT OR FOR EACH CHANGE IN GROUT/CONCRETE PUMPING EQUIPMENT, THE CONTRACTOR SHALL PROVIDE THE GROUTING RATE AND CALCULATION TO VERIFY THAT THE REQUIRED GROUT/CONCRETE VOLUME IS ACHIEVED USING THE RIGID INCLUSION EQUIPMENT AND PROCEDURE.

bcra
T 253.627.4367 F 253.627.4395 WWW.BCRADESIGN.COM
2106 PACIFIC AVENUE, SUITE 300, TACOMA, WA 98402

SEAL

KING H. CHIN
STATE OF WASHINGTON
38704
REGISTERED PROFESSIONAL ENGINEER
10/13/23

GEOENGINEERS
WWW.GEOENGINEERS.COM

PROJECT
PORT OF EVERETT
WINE WALK BUILDING A12
XXXX SEINER DRIVE
EVERETT, WASHINGTON 98201

REVISIONS

DATE
12.13.2023

BCRA NO.
23045.00.00

DRAWN BY:

REVIEWED BY:

SHEET TITLE
SPECIFICATIONS

bcra

© COPYRIGHT 2023 - BCRA, INC. ALL RIGHTS RESERVED

SHEET
GI1.03

100% DD Set

IF SHEET MEASURES LESS THAN 22"X34", IT IS A REDUCED PRINT. REDUCE SCALE ACCORDINGLY

Plotted: 12/13/2023, 17:39 | syi P:\0\0676\29\CAD\05\Ground Improvement Plan - Parcel A12\v02_100_Percent Draft Design\067602905_Sht 3_GI1-03 [Specifications].dwg
22x34 8/23/2023 9:00 PM

PART 3 - PRODUCTS

3.1 MATERIALS

A. GROUT/CONCRETE MIXTURES

1. PREPARE DESIGN MIXTURES FOR EACH TYPE AND STRENGTH OF GROUT/CONCRETE, PROPORTIONED ON THE BASIS OF LABORATORY TRIAL MIXTURE, FIELD TEST DATA, OR BOTH.

a. USE A QUALIFIED INDEPENDENT TESTING AGENCY FOR PREPARING AND REPORTING PROPOSED MIXTURE DESIGNS BASED ON LABORATORY TRIAL MIXTURES.

2. PROPORTION GROUT/CONCRETE MIXTURE AS FOLLOWS:

a. DESIGN COMPRESSIVE STRENGTH - 4,000 PSI AT 28 DAYS; ASTM C39/C39M WITH CUBE SPECIMENS RESTRAINED FROM EXPANSION ACCORDING TO ASTM C942.

b. MAXIMUM WATER-CEMENTITIOUS MATERIALS RATIO: 1.00.

c. GROUT/CONCRETE FLOW - 10 TO 25 SECONDS; ASTM C939 AND ASTM C39/C39M USING A FLOW CONE WITH 0.75-INCH (19-MM) OPENING.

3.2 EQUIPMENT

A. DRILLING AND PUMPING EQUIPMENT:

1. DRILL RIG - CAPABLE OF ADVANCING HOLLOW-STEM AUGER, CONTINUOUS-FLIGHT AUGERS OF DESIGN DIAMETERS TO DESIGN DEPTHS; WITH STABILIZING ARM AT BOTTOM OF LEADS TO PREVENT ROTATION, AND MIDDLE GUIDE FOR AUGERS GREATER THAN 40 FEET (12 M) IN LENGTH.

a. MARK LEADS AT MAXIMUM 12-INCH (300-MM) INTERVALS TO FACILITATE MEASUREMENT OF PENETRATION.

2. HOLLOW-STEM AUGER - CONTINUOUS AUGER FLIGHTING WITHOUT GAPS OR BREAKS, OF DIAMETER NO MORE THAN 3 PERCENT LESS THAN RIGID INCLUSION DIAMETER; WITH GROUT/CONCRETE PUMPING HOLE AT BOTTOM OF AUGER HEAD BELOW CUTTING TEETH. SEAL GROUT/CONCRETE-PUMPING HOLE WITH TEMPORARY TIP PLUG TO BE FULLY OPENED BY GROUT/CONCRETE PRESSURE DURING GROUT/CONCRETE INSTALLATION.

a. HOLLOW SHAFT DIAMETER - MINIMUM 1-1/4-INCH (32-MM) CLEAR ID.

3. GROUT/CONCRETE PUMP - POSITIVE DISPLACEMENT PUMP WITH A KNOWN VOLUME PER STROKE. MINIMUM DISPLACEMENT PRESSURE AT PUMP OF 350 LBF/SQ. IN (240 MPA).

PART 4 - EXECUTION

4.1 PREPARATION

A. PROTECT STRUCTURES, UTILITIES, AND OTHER ADJACENT CONSTRUCTION TO AVOID DAMAGE CAUSED BY SETTLEMENT, LATERAL MOVEMENT, AND OTHER HAZARDS CREATED BY DRILLING OPERATIONS.

B. THE ELEVATION OF THE TOP OF THE RIGID INCLUSION SHALL BE 24 INCHES BELOW THE BUILDING FOUNDATIONS AND SLABS. THE RIGID INCLUSION CONTRACTOR WILL NEED TO COORDINATE WITH THE EARTHWORK CONTRACTOR ON THE GRADING PLANS PREPARED FOR THIS PROJECT.

4.2 INSTALLATION

A. PREVENT SURFACE WATER FROM ENTERING EXCAVATED SHAFTS. CONDUCT WATER TO SITE DRAINAGE FACILITIES.

B. RIGID INCLUSIONS SHALL BE PLACED BY ROTATING A CONTINUOUS FLIGHT HOLLOW-STEM AUGER INTO THE GROUND TO THE DEPTHS INDICATED ON THE PROJECT PLANS. ADVANCE AUGER AT A CONTINUOUS RATE DURING INSERTION THAT PREVENTS THE REMOVAL OF EXCESS SOIL.

C. EXCAVATE RIGID INCLUSIONS TO DEPTHS/ELEVATIONS INDICATED ON PROJECT PLANS.

D. MAINTAIN POSITIVE (CLOCKWISE) ROTATION OF AUGER DURING WITHDRAWAL. PROMPTLY REMOVE EXCAVATED SPOILS TO PREVENT ACCUMULATION.

E. GROUT/CONCRETE PLACEMENT

1. GROUT/CONCRETE SHALL BE PUMPED WITH SUFFICIENT PRESSURE THROUGH THE AUGER SHAFT AS THE AUGER IS WITHDRAWN TO FILL THE AUGURED HOLE PREVENTING HOLE COLLAPSE AND ANY INFILTRATION OF SOIL INTO THE HOLE AND TO CAUSE THE LATERAL PENETRATION OF THE GROUT/CONCRETE INTO SOFT OR POROUS ZONES OF THE ADJACENT SOIL. GROUT/CONCRETE SHALL BE PLACED IN CONTINUOUS OPERATION.

2. LIFT AUGER 6 TO 12 INCHES AT START OF GROUT/CONCRETE PUMPING TO FACILITATE TIP PLUG REMOVAL, THEN RETURN TO PREVIOUSLY ESTABLISHED TIP ELEVATION.

3. A MINIMUM GROUT/CONCRETE LINE PRESSURE OF AT LEAST 100 PSI SHOULD BE MAINTAINED.

4. DEVELOP AN INITIAL GROUT/CONCRETE HEAD OF 5 FEET BEFORE START OF AUGER WITHDRAWAL AND MAINTAIN DURING EXTRACTION.

5. MONITOR PUMPED GROUT/CONCRETE VOLUMES USING CALIBRATED MONITORING EQUIPMENT.

6. THE ELEVATION OF THE TOP OF THE RIGID INCLUSION SHALL BE 24 INCHES BELOW THE BOTTOM OF FOOTINGS.

7. VOLUME OF PLACED GROUT/CONCRETE SHALL BE AT LEAST 100 PERCENT OF THEORETICAL VOLUME MEASURED AT 60-INCH SEGMENTS. IF LESS THAN REQUIRED VOLUME IS PLACED FOR ANY GIVEN 60-INCH SEGMENT, LOWER AUGER MINIMUM OF 60 INCHES, OR TO BOTTOM OF RIGID INCLUSION IF LESS THAN 60 INCHES AVAILABLE, AND RESTART WITHDRAWAL.

8. IF GROUT/CONCRETE PUMPING IS INTERRUPTED DURING PLACEMENT, LOWER AUGER A MINIMUM OF 60 INCHES, OR THE BOTTOM OF THE RIGID INCLUSION IF LESS THAN 60 INCHES AVAILABLE, AND RESTART WITHDRAWAL.

9. A HEAD OF GROUT/CONCRETE AT LEAST 5 FEET ABOVE THE POINT OF INJECTION SHALL BE MAINTAINED AT ALL TIMES DURING THE PUMPING PROCESS SO THAT THE GROUT/CONCRETE HAS A DISPLACING ACTION REMOVING ANY LOOSE MATERIAL AND MAINTAINING THE SHAPE OF THE HOLE.

10. ADJACENT RIGID INCLUSIONS - DO NOT INSTALL RIGID INCLUSIONS WITHIN 6 FEET OF RIGID INCLUSIONS GROUTED WITHIN THE PREVIOUS 12 HOURS.

11. REMOVED EXCAVATED MATERIAL AND DISPOSE OFF SITE.

4.3 HORIZONTAL AND VERTICAL ALIGNMENT TOLERANCES

A. THE MAXIMUM HORIZONTAL DEVIATION OF THE AS-INSTALLED CENTER OF ANY RIGID INCLUSION PROJECTED AT THE TOP OF THE RIGID INCLUSION SHALL NOT EXCEED 3 IN. FROM THE LAYOUT CENTER COORDINATE, UNLESS APPROVED BY THE DESIGNER.

B. THE VERTICAL ALIGNMENT OF RIGID INCLUSIONS SHALL NOT DEVIATE IN ANY DIRECTION BY MORE THAN 2% FROM VERTICAL.

C. IF LOCATION OR OUT-OF-PLUMB TOLERANCES ARE EXCEEDED, PROVIDE CORRECTIVE CONSTRUCTION. SUBMIT CORRECTIVE CONSTRUCTION PROPOSALS TO THE DESIGNER FOR REVIEW BEFORE PROCEEDING.

4.4 OBSTRUCTIONS

A. SUBSURFACE STRATA MAY CONTAIN RUBBLE, CONCRETE, METAL, BRICKS, GRANITE, STONE AND BLOCKS, WOOD DEBRIS, ABANDONED UTILITIES, FOUNDATION ELEMENTS AND OTHER MATERIALS THAT CAN OBSTRUCT RIGID INCLUSION INSTALLATION OPERATIONS.

B. TNATURALLY OCCURRING MATERIALS, SUCH AS COBBLES, BOULDERS, DENSE WELL-BONDED OR OTHER COMPETENT IN-SITU SOILS, WILL NOT BE CONSIDERED AS OBSTRUCTIONS. BOULDERS, AND SAND AND GRAVEL LAYERS MAY BE ENCOUNTERED WITHIN THE SUBSURFACE SOILS, BUT WILL NOT BE CONSIDERED AS EITHER KNOWN OR UNKNOWN OBSTRUCTIONS.

C. WHERE UNKNOWN OBSTRUCTIONS ARE ENCOUNTERED DURING RIGID INCLUSION INSTALLATION, THE CONTRACTOR SHALL INSTALL ADDITIONAL RIGID INCLUSIONS TO AVOID THE OBSTRUCTION, AT THE DIRECTION OF THE ENGINEER. EACH SITUATION SHALL BE RESOLVED AND PAID ON A CASE-BY-CASE BASIS. IF SUCH CONDITIONS ARE ENCOUNTERED, THE CONTRACTOR SHALL NOTIFY THE ENGINEER IN WRITING, AND PROVIDE ALL PERTINENT INFORMATION RELATING TO THE NATURE, DEPTH, PLAN LOCATION COORDINATES, EXPECTED EXTENT OF THE OBSTRUCTION, AND PROPOSED NEW LOCATION TO OVERCOME THE OBSTRUCTION.

D. IF DIFFICULT DRILLING IS ENCOUNTERED DUE TO THE PRESENCE OF NATURALLY OCCURRING COBBLES, BOULDERS, OR DENSE WELL-BONDED IN-SITU SOILS, OR OTHER CHARACTERISTICS OF THE IN-SITU SOILS, THE CONTRACTOR MAY ELECT TO REMOVE THE OBJECT OR SUBMIT AN ALTERNATE LOCATION TO AVOID THE OBJECT, SUBJECT TO THE ACCEPTANCE OF THE ENGINEER AND AT NO ADDITIONAL COST TO THE OWNER. SUCH NATURALLY OCCURRING CONDITIONS SHALL NOT BE THE BASIS FOR ADDITIONAL MEASUREMENT OR COMPENSATION.

4.5 SITE MAINTENANCE

A. AT ALL TIMES DURING RIGID INCLUSION INSTALLATION OPERATIONS, THE SITE SHALL BE MAINTAINED CLEARED OF ALL DEBRIS AND WATER. THE CONTRACTOR SHALL REGULARLY DISPOSE OF ALL WASTE MATERIALS IN ACCORDANCE WITH THE REQUIREMENTS OF ALL AGENCIES HAVING JURISDICTION.

B. THE CONTRACTOR SHALL BE RESPONSIBLE FOR AND INCORPORATE ALL SEDIMENTATION AND TURBIDITY CONTROL MEASURES REQUIRED BY APPLICABLE FEDERAL, STATE, AND LOCAL REGULATIONS.

C. THE CONTRACTOR SHALL TAKE ALL NECESSARY PRECAUTIONS AND IMPLEMENT MEASURES TO PREVENT ANY SPOIL MATERIAL, OR STOCKPILED MATERIALS FROM ENTERING STORM DRAIN STRUCTURES, DRAINAGE COURSES, AND OTHER UTILITY LINES, OR FROM LEAVING THE SITE VIA SURFACE RUNOFF. THE CONTRACTOR SHALL PREVENT THE MIGRATION OF SPOIL RETURN, SPOIL MATERIAL, OR STOCKPILED MATERIALS INTO ANY SURFACE WATER BODY, BEYOND THE IMMEDIATE LIMITS OF GROUT/CONCRETE MIXING OPERATIONS.

4.6 ACCEPTANCE TESTING

A. GROUT/CONCRETE VOLUME

1. THE ACCEPTANCE OF THE RIGID INCLUSION INSTALLATION WILL BE BASED ON THE DIAMETER AND DESIGN DEPTHS SPECIFIED IN THE PROJECT PLANS AND AS DETERMINED BY THE GEOTECHNICAL SPECIAL INSPECTOR.

B. GROUT/CONCRETE COMPRESSIVE STRENGTH

1. THE RIGID INCLUSION CONSTRUCTED SHALL ACHIEVE AN AVERAGE COMPRESSIVE STRENGTH OF AT LEAST 4,000 PSI WITH NO MORE THAN 15% OF THE 28-DAY UNCONFINED COMPRESSIVE STRENGTH RESULTS SHALL FALL BELOW THE TARGETED UNCONFINED COMPRESSIVE STRENGTH OF 4,000 PSI.

bcra
T 253.627.4367 F 253.627.4395 WWW.BCRADESIGN.COM
2106 PACIFIC AVENUE, SUITE 300, TACOMA, WA 98402

SEAL

KING H. CHIN, STATE OF WASHINGTON, 38704, REGISTERED PROFESSIONAL ENGINEER
12/13/23

GEOENGINEERS
WWW.GEOENGINEERS.COM

PROJECT
PORT OF EVERETT
WINE WALK BUILDING A12
XXXX SEINER DRIVE
EVERETT, WASHINGTON 98201

REVISIONS

DATE
12.13.2023

BCRA NO.
23045.00.00

DRAWN BY:

REVIEWED BY:

SHEET TITLE
SPECIFICATIONS

bcra

© COPYRIGHT 2023 - BCRA, INC. ALL RIGHTS RESERVED.

SHEET
GI1.04

100% DD Set

IF SHEET MEASURES LESS THAN 22"X34", IT IS A REDUCED PRINT. REDUCE SCALE ACCORDINGLY

Plotted: 12/13/2023, 17:39 | syi P:\0\06760\029\CAD\05\Ground Improvement Plan - Parcel A12\v02_100_Percent Draft Design\06760\2905_Sht 4_GI1-04 [Specifications].dwg
22x34 8/23/2023 9:00 PM

REQUIRED OFF STREET PARKING SPACE (EMC 19.34.020)

FOOD OR BEVERAGE ESTABLISHMENT	1 PER 200 SF
RETAIL TRADE AND SERVICE, GENERAL TRADE	1 PER 400 SF

PARKING REQUIRED:

RESTAURANT:	3,727 SF/ 200 SF = 19
RETAIL:	7,570 SF/ 400 SF = 19
TOTAL:	38 PARKING SPACES

PARKING PROVIDED:

SITE PLAN GENERAL NOTES

1. REFER TO CIVIL DRAWINGS FOR DEMOLITION OF EXISTING STRUCTURES AND SITE FEATURES.
2. REFER TO CIVIL DRAWINGS FOR ASPHALT PAVING AND CONCRETE SIDEWALK SECTIONS.
3. REFER TO CIVIL DRAWINGS FOR ALL SURFACING FEATURES, UTILITIES, GRADING, STORMWATER AND ELEVATIONS. ELEMENTS SHOWN ON THIS DRAWING ARE FOR REFERENCE ONLY.
4. REFER TO LANDSCAPE DRAWINGS FOR PLANTING AND IRRIGATION DESIGN.
5. REFER TO ELECTRICAL DRAWINGS FOR SITE LIGHTING AND EQUIPMENT DESIGN.

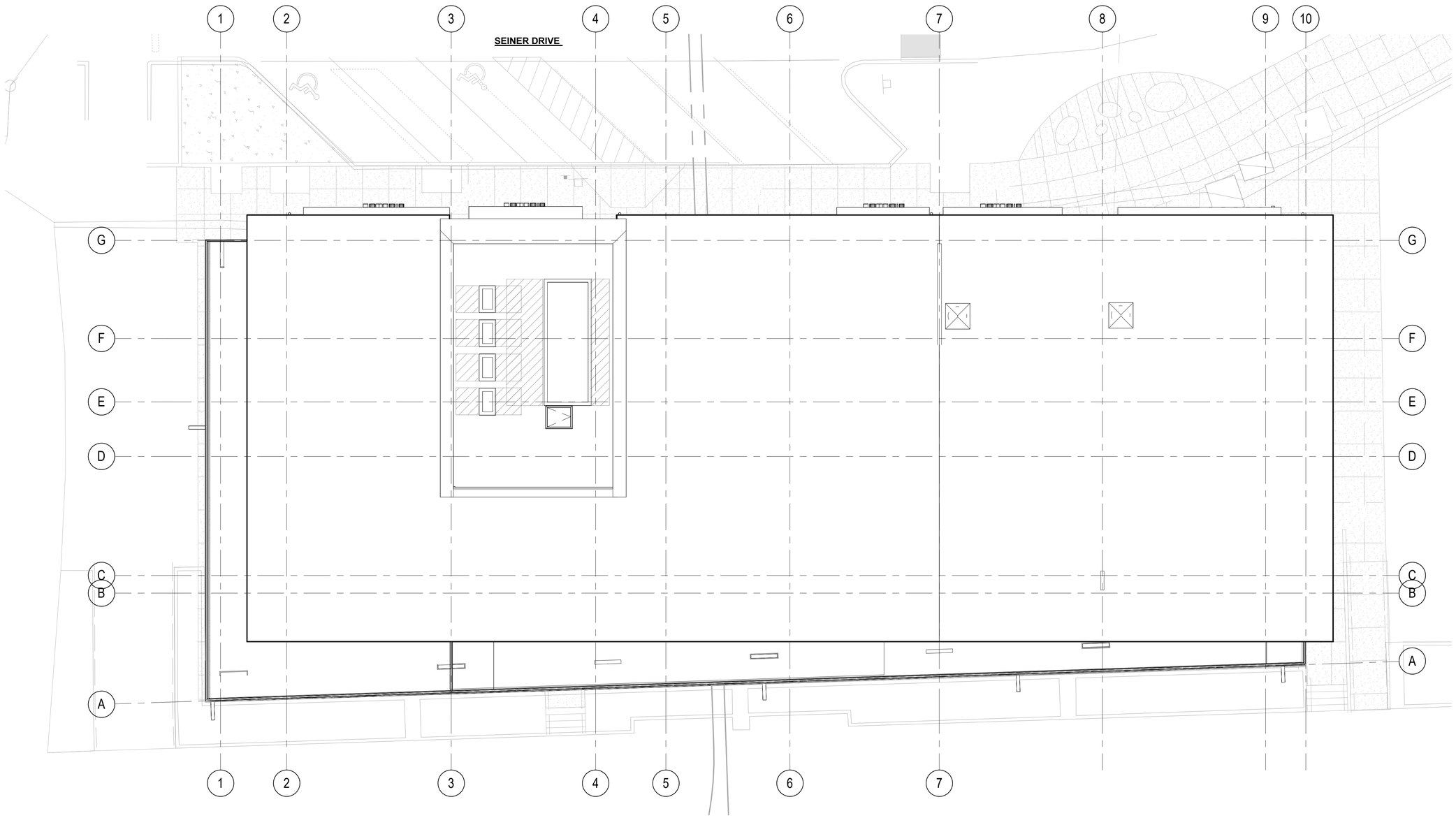

1 SITE PLAN
1/8" = 1'-0"

0 4 8 16
SCALE: 1/8" = 1'-0"

TRUE NORTH

bcra
T 253.627.4367 F 253.627.4395 WWW.BCRADESIGN.COM
2106 PACIFIC AVENUE, SUITE 300, TACOMA, WA 98402

SEAL

PROJECT
PORT OF EVERETT
WINE WALK BUILDING A12
XXXX SEINER DRIVE
EVERETT, WASHINGTON 98201

REVISIONS

DATE
12.14.2023

BCRA NO.
23045.00.00

DRAWN BY:

REVIEWED BY: Reviewer

SHEET TITLE
SITE PLAN

bcra

© COPYRIGHT 2023 - BCRA, INC. ALL RIGHTS RESERVED

SHEET
A-111

PROGRESS SET

IF SHEET MEASURES LESS THAN 22"X34", IT IS A REDUCED PRINT. REDUCE SCALE ACCORDINGLY

22x34 12/14/2023 4:15:40 PM

TENANT LIST
- A: RUSTIC CORK WINE BAR
- B.1: MENCHIE'S FROZEN YOGURT
- B.2: TAPPED
- C: HAMILTON

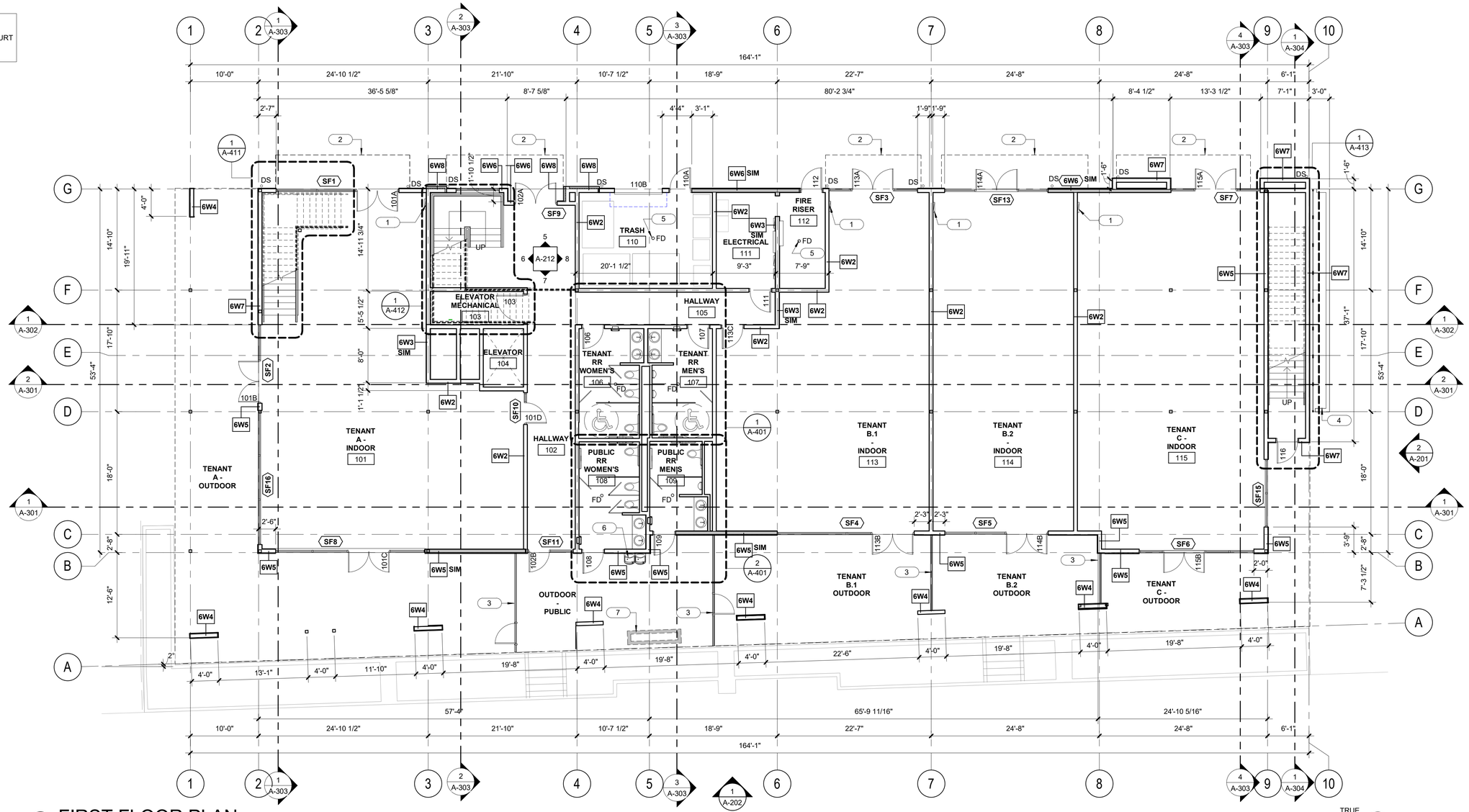

1 FIRST FLOOR PLAN
1/8" = 1'-0"

FLOOR PLAN LEGEND

NOTE: NOT ALL LEGEND ITEMS MAY BE PRESENT ON THIS SHEET

- 6W# — WALL ASSEMBLY; REFER TO SHEETS A-621 AND A-622
- EXTERIOR FRAMED WALL - REFER ALSO TO STRUCTURAL
- INTERIOR FRAMED WALL - STOP WALL AT 6" ABOVE HIGHEST CEILING UNLESS NOTED OTHERWISE - BRACE TO STRUCTURE ABOVE AS SHOWN ON A-521.
- WALL-MOUNTED ITEM - REFER TO INTERIOR ELEVATIONS
- RELITE / WINDOW
- DOOR
- STRUCTURE ABOVE / EDGE OF ROOF ABOVE
- FEC — FIRE EXTINGUISHER IN CABINET
- FEB — FIRE EXTINGUISHER WITH BRACKET
- DS — DOWNSPOUT
- R1 — ROOF ASSEMBLY PER A-622

FLOOR PLAN SHEET NOTES

1. TENANT ELECTRICAL PANEL, REFER TO ELECTRICAL DRAWINGS FOR ADDITIONAL INFORMATION
2. OUTLINE OF AWNING ABOVE
3. SCREEN WALL AND GATE @ 3'-6" +/- HEIGHT
4. RAISED LANDSCAPE PLANTER, REFER TO LANDSCAPE DRAWINGS FOR MORE INFORMATION
5. TYP AT FLOOR DRAINS: SLOPE FLOOR WITHIN 24" TO DRAIN. SLOPE SHALL NOT EXCEED 1/4" PER 12"
6. BOTTLE FILLER AND PET FOUNTAIN
7. FIREPIT PER LANDSCAPE

FLOOR PLAN GENERAL NOTES

1. REFER TO A-621 – A-622 FOR WALL ASSEMBLY TYPES.
2. REFER TO INTERIOR ELEVATIONS FOR WALL FINISHES.
3. REFER TO G-301 AND FLOOR PLANS FOR LOCATIONS OF FIRE-RATED WALL CONSTRUCTION.
4. REFER TO A-611 - A-612 FOR STOREFRONT CALLOUTS.
5. REFER TO MECHANICAL DRAWINGS FOR SIZING AND CONFIGURATION OF ALL DUCTS AND PIPES PENETRATING FLOOR ASSEMBLIES.
6. PROVIDE FIRESTOPPING AT ALL ELECTRICAL AND MECHANICAL (CONDUIT, PIPING AND DUCT) PENETRATIONS THROUGH FIRE-RATED FLOOR/CEILING/ROOF ASSEMBLIES.
7. REFER TO ENLARGED FLOOR PLANS FOR ADDITIONAL FLOOR PLAN INFORMATION.
8. ALL DIMENSIONS ARE TO FACE OF FRAMING, FACE OF CONCRETE, CENTERLINE OF PARTY WALL, OR CENTERLINE OF OPENINGS, UNO.

bcra
T 253.627.4367 F 253.627.4395 WWW.BCRADESIGN.COM
2106 PACIFIC AVENUE, SUITE 300, TACOMA, WA 98402

SEAL

PROJECT
PORT OF EVERETT
WINE WALK BUILDING A12
XXXX SEINER DRIVE
EVERETT, WASHINGTON 98201

REVISIONS

DATE
12.14.2023

BCRA NO.
23045.00.00

DRAWN BY: JC, MD

REVIEWED BY: DO, AT

SHEET TITLE
FIRST FLOOR PLAN

bcra

© COPYRIGHT 2023 - BCRA, INC. ALL RIGHTS RESERVED

SHEET
A-121

PROGRESS SET

22x34 12/14/2023 4:15:41 PM

IF SHEET MEASURES LESS THAN 22"X34", IT IS A REDUCED PRINT. REDUCE SCALE ACCORDINGLY

TENANT LIST
- A: RUSTIC CORK WINE BAR
- B.1: MENCHIE'S FROZEN YOGURT
- B.2: TAPPED
- C: HAMILTON

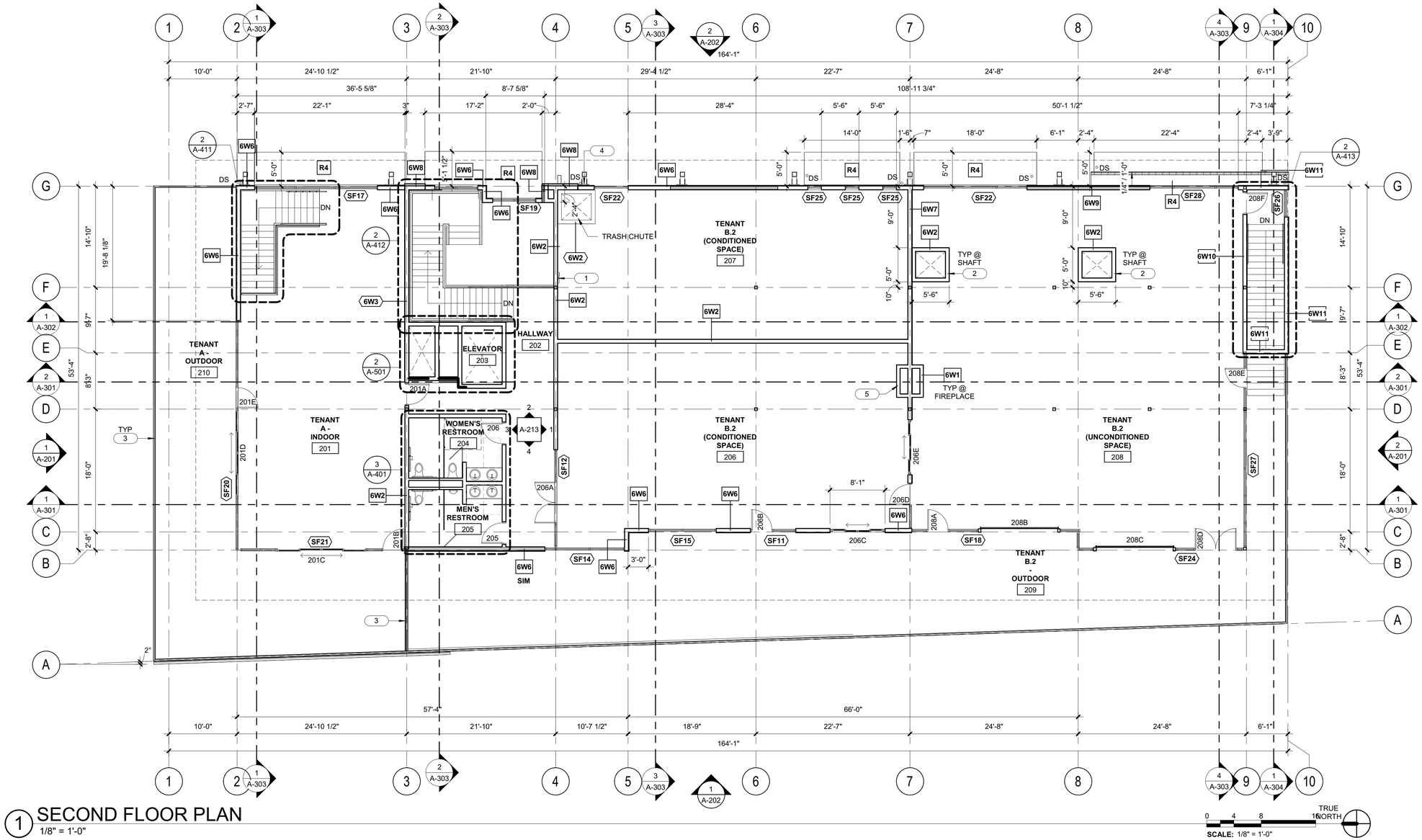

1 SECOND FLOOR PLAN
1/8" = 1'-0"

SCALE: 1/8" = 1'-0"

FLOOR PLAN LEGEND

NOTE: NOT ALL LEGEND ITEMS MAY BE PRESENT ON THIS SHEET

- 6W# — WALL ASSEMBLY; REFER TO SHEETS A-621 AND A-622
- EXTERIOR FRAMED WALL - REFER ALSO TO STRUCTURAL
- INTERIOR FRAMED WALL - STOP WALL AT 6" ABOVE HIGHEST CEILING UNLESS NOTED OTHERWISE - BRACE TO STRUCTURE ABOVE AS SHOWN ON A-521.
- WALL-MOUNTED ITEM - REFER TO INTERIOR ELEVATIONS
- RELITE / WINDOW
- DOOR
- STRUCTURE ABOVE / EDGE OF ROOF ABOVE
- FEC — FIRE EXTINGUISHER IN CABINET
- FEB — FIRE EXTINGUISHER WITH BRACKET
- DS — DOWNSPOUT
- R1 — ROOF ASSEMBLY PER A-622

FLOOR PLAN SHEET NOTES

1. TENANT ELECTRICAL PANEL, REFER TO ELECTRICAL DRAWINGS FOR ADDITIONAL INFORMATION
2. HOOD LOCATION, REFER TO MECHANICAL DRAWINGS FOR ADDITIONAL INFORMATION
3. CABLE RAILING @ 3'-6" HEIGHT
4. WOOD KICKER WITH KNIFE PLATE, TYP.
5. DOUBLE SIDED FIREPLACE

FLOOR PLAN GENERAL NOTES

1. REFER TO A-621 – A-622 FOR WALL ASSEMBLY TYPES.
2. REFER TO INTERIOR ELEVATIONS FOR WALL FINISHES.
3. REFER TO G-301 AND FLOOR PLANS FOR LOCATIONS OF FIRE-RATED WALL CONSTRUCTION.
4. REFER TO A-611 - A-612 FOR STOREFRONT CALLOUTS.
5. REFER TO MECHANICAL DRAWINGS FOR SIZING AND CONFIGURATION OF ALL DUCTS AND PIPES PENETRATING FLOOR ASSEMBLIES.
6. PROVIDE FIRESTOPPING AT ALL ELECTRICAL AND MECHANICAL (CONDUIT, PIPING AND DUCT) PENETRATIONS THROUGH FIRE-RATED FLOOR/CEILING/ROOF ASSEMBLIES.
7. REFER TO ENLARGED FLOOR PLANS FOR ADDITIONAL FLOOR PLAN INFORMATION.
8. ALL DIMENSIONS ARE TO FACE OF FRAMING, FACE OF CONCRETE, CENTERLINE OF PARTY WALL, OR CENTERLINE OF OPENINGS, UNO.

bcra
T 253.627.4367 F 253.627.4395 WWW.BCRADESIGN.COM
2106 PACIFIC AVENUE, SUITE 300, TACOMA, WA 98402

SEAL

PROJECT
PORT OF EVERETT
WINE WALK BUILDING A12
XXXX SEINER DRIVE
EVERETT, WASHINGTON 98201

REVISIONS

DATE 12.14.2023
BCRA NO. 23045.00.00
DRAWN BY: JC, MD
REVIEWED BY: DO, AT
SHEET TITLE SECOND FLOOR PLAN

bcra
© COPYRIGHT 2023 - BCRA, INC. ALL RIGHTS RESERVED.

SHEET
A-122
PROGRESS SET

IF SHEET MEASURES LESS THAN 22"X34", IT IS A REDUCED PRINT. REDUCE SCALE ACCORDINGLY

22x34 12/14/2023 4:47:03 PM

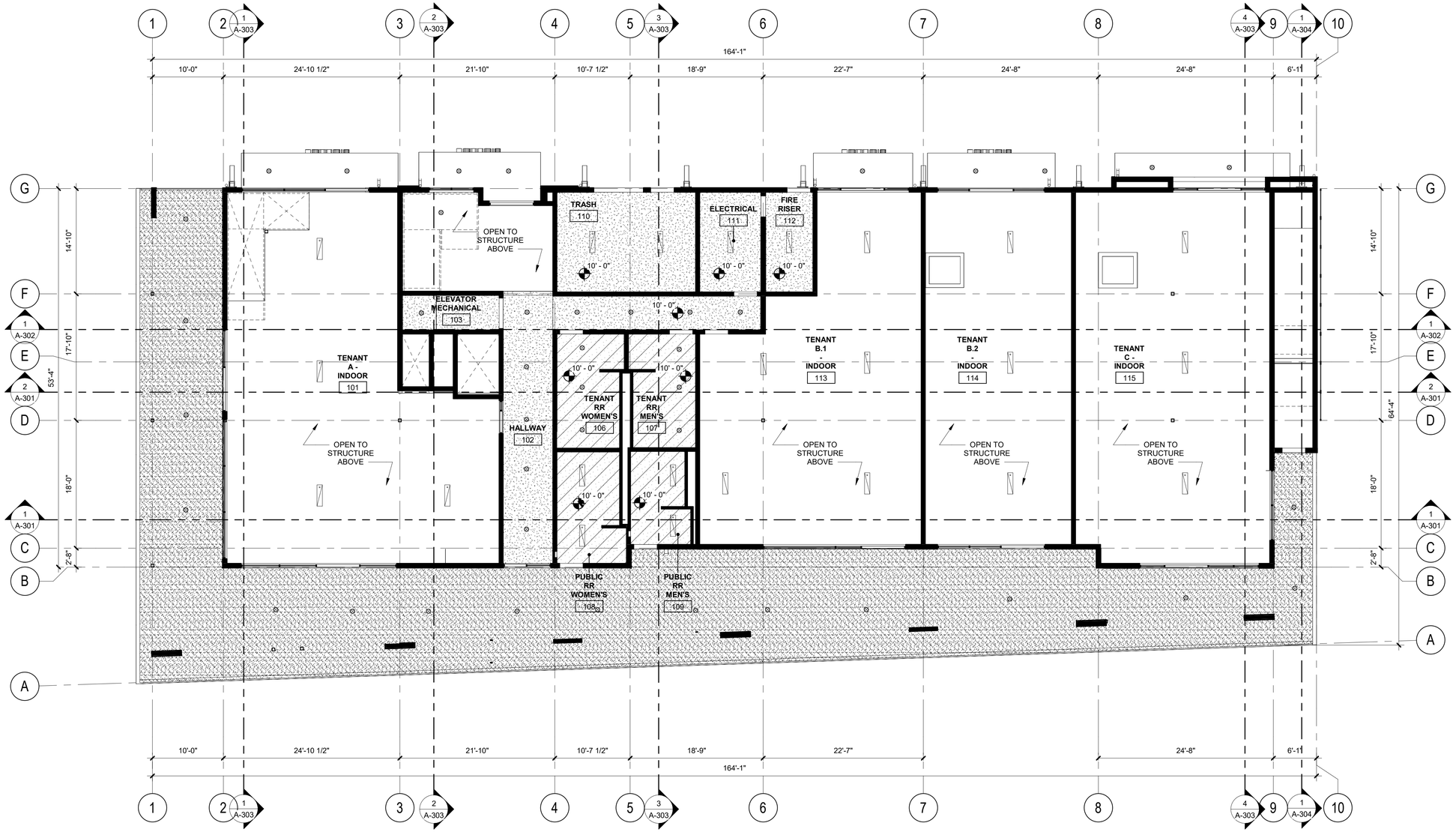

1 FIRST FLOOR REFLECTED CEILING PLAN
1/8" = 1'-0"

REFLECTED CEILING PLAN LEGEND

- DOOR AS SCHEDULED / OPENING, PER PLAN
- WALL PER PLAN
- RELITE / WINDOW / STOREFRONT AS SCHEDULED
- 8'-0" CEILING HEIGHT
- LIGHT FIXTURE (SIZE AND TYPE VARIES) -REFER ALSO TO ELECTRICAL
- LIGHT FIXTURE (SIZE AND TYPE VARIES) -REFER ALSO TO ELECTRICAL
- LAYOUT LINE, WHERE OCCURS, CENTER FIXTURE WITHIN CEILING, BOTH DIRECTIONS.
- (1) LAYER FIBER CEMENT SOFFIT PANEL CONTRACTOR'S OPTION: - ON WOOD FRAMING - ON METAL FRAMING
- (1) LAYER 5/8" GYPSUM BOARD CONTRACTOR'S OPTION: - ON WOOD FRAMING - ON METAL FRAMING
- (1) LAYER 5/8" WATER RESISTANT GYPSUM BOARD CONTRACTOR'S OPTION: - ON WOOD FRAMING - ON METAL FRAMING
- 1 HOUR HORIZONTAL ASSEMBLY REFER TO A-622 FOR ASSEMBLY REQUIREMENTS

REFLECTED CEILING PLAN GENERAL NOTES

1. DIMENSIONS ARE TO FACE OF FINISH AND CENTERLINE OF FIXTURES, UNLESS NOTED OTHERWISE.
2. PER ASCE 7-02 SECTION 9.6.2.6.2.2 ITEM C: PROVIDE LATERAL FORCE BRACING (VERTICAL STRUTS AND SPLAY WIRES) FOR CEILINGS WITH AN AREA OF 1,000 SQUARE FEET OR MORE.
3. REFER ALSO TO STRUCTURAL FOR LOCATIONS OF WALL FRAMING THAT EXTENDS TO STRUCTURE ABOVE.
4. COORDINATE LOCATION OF WORK/DEVICES SHOWN ON MECHANICAL, ELECTRICAL, AND FIRE PROTECTION DRAWINGS AND NOT SHOWN ON REFLECTED CEILING PLANS.
5. LIGHT FIXTURE LOCATIONS SHOWN FOR REFERENCE ONLY. REFER TO ELECTRICAL DRAWINGS FOR ADDITIONAL INFORMATION.

bcra
T 253.627.4367 F 253.627.4395 WWW.BCRADESIGN.COM
2106 PACIFIC AVENUE, SUITE 300, TACOMA, WA 98402

SEAL

PROJECT
PORT OF EVERETT
WINE WALK BUILDING A12
XXXX SEINER DRIVE
EVERETT, WASHINGTON 98201

REVISIONS

DATE 12.14.2023
BCRA NO. 23045.00.00
DRAWN BY: JC, MD
REVIEWED BY: DO, AT
SHEET TITLE FIRST FLOOR REFLECTED CEILING PLAN

bcra
© COPYRIGHT 2023 - BCRA, INC. ALL RIGHTS RESERVED

SHEET
A-151
PROGRESS SET

IF SHEET MEASURES LESS THAN 22"X34", IT IS A REDUCED PRINT. REDUCE SCALE ACCORDINGLY

22x34 12/14/2023 4:15:43 PM

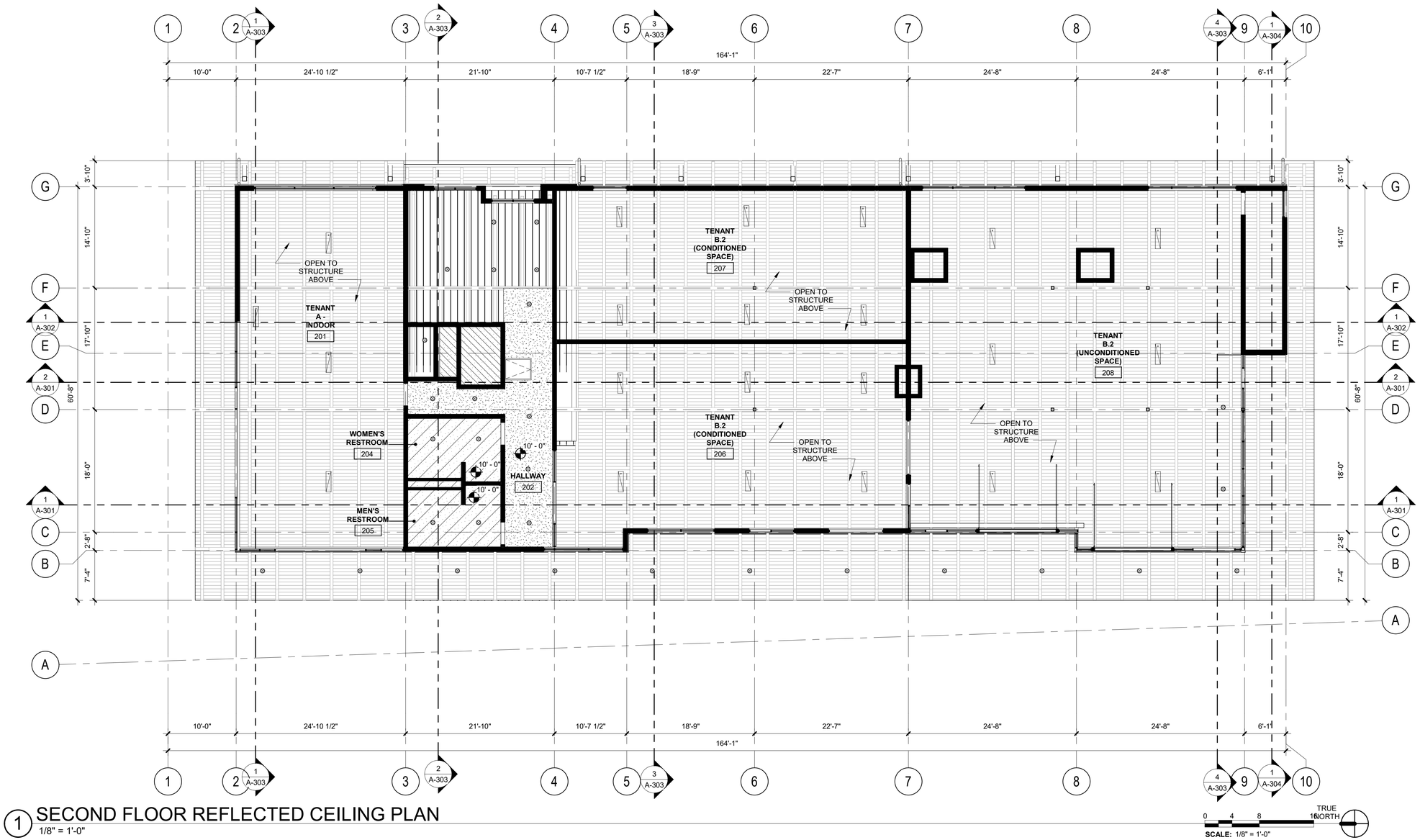

1 SECOND FLOOR REFLECTED CEILING PLAN

1/8" = 1'-0"

REFLECTED CEILING PLAN LEGEND

- DOOR AS SCHEDULED / OPENING, PER PLAN
- WALL PER PLAN
- RELITE / WINDOW / STOREFRONT AS SCHEDULED
- 8'-0" CEILING HEIGHT
- LAY-IN LIGHT FIXTURE (SIZE AND TYPE VARIES) -REFER ALSO TO ELECTRICAL
- LIGHT FIXTURE (SIZE AND TYPE VARIES) -REFER ALSO TO ELECTRICAL
- LAYOUT LINE, WHERE OCCURS, CENTER FIXTURE WITHIN CEILING, BOTH DIRECTIONS.
- (1) LAYER FIBER CEMENT SOFFIT PANEL CONTRACTOR'S OPTION: - ON WOOD FRAMING - ON METAL FRAMING
- (1) LAYER 5/8" GYPSUM BOARD CONTRACTOR'S OPTION: - ON WOOD FRAMING - ON METAL FRAMING
- (1) LAYER 5/8" WATER RESISTANT GYPSUM BOARD CONTRACTOR'S OPTION: - ON WOOD FRAMING - ON METAL FRAMING
- 1 HOUR HORIZONTAL ASSEMBLY REFER TO A-622 FOR ASSEMBLY REQUIREMENTS

REFLECTED CEILING PLAN GENERAL NOTES

1. DIMENSIONS ARE TO FACE OF FINISH AND CENTERLINE OF FIXTURES, UNLESS NOTED OTHERWISE.
2. PER ASCE 7-02 SECTION 9.6.2.6.2.2 ITEM C: PROVIDE LATERAL FORCE BRACING (VERTICAL STRUTS AND SPLAY WIRES) FOR CEILINGS WITH AN AREA OF 1,000 SQUARE FEET OR MORE.
3. REFER ALSO TO STRUCTURAL FOR LOCATIONS OF WALL FRAMING THAT EXTENDS TO STRUCTURE ABOVE.
4. COORDINATE LOCATION OF WORK/DEVICES SHOWN ON MECHANICAL, ELECTRICAL, AND FIRE PROTECTION DRAWINGS AND NOT SHOWN ON REFLECTED CEILING PLANS.
5. LIGHT FIXTURE LOCATIONS SHOWN FOR REFERENCE ONLY. REFER TO ELECTRICAL DRAWINGS FOR ADDITIONAL INFORMATION.

bcra
T 253.627.4367 F 253.627.4395 WWW.BCRADESIGN.COM
2106 PACIFIC AVENUE, SUITE 300, TACOMA, WA 98402

SEAL

PROJECT
PORT OF EVERETT
WINE WALK BUILDING A12
XXXX SEINER DRIVE
EVERETT, WASHINGTON 98201

REVISIONS

DATE 12.14.2023
BCRA NO. 23045.00.00
DRAWN BY: JC, MD
REVIEWED BY: DO, AT
SHEET TITLE SECOND FLOOR REFLECTED CEILING PLAN

bcra
© COPYRIGHT 2023 - BCRA, INC. ALL RIGHTS RESERVED

SHEET
A-152

PROGRESS SET

IF SHEET MEASURES LESS THAN 22"X34", IT IS A REDUCED PRINT. REDUCE SCALE ACCORDINGLY

22x34 12/14/2023 4:27:26 PM

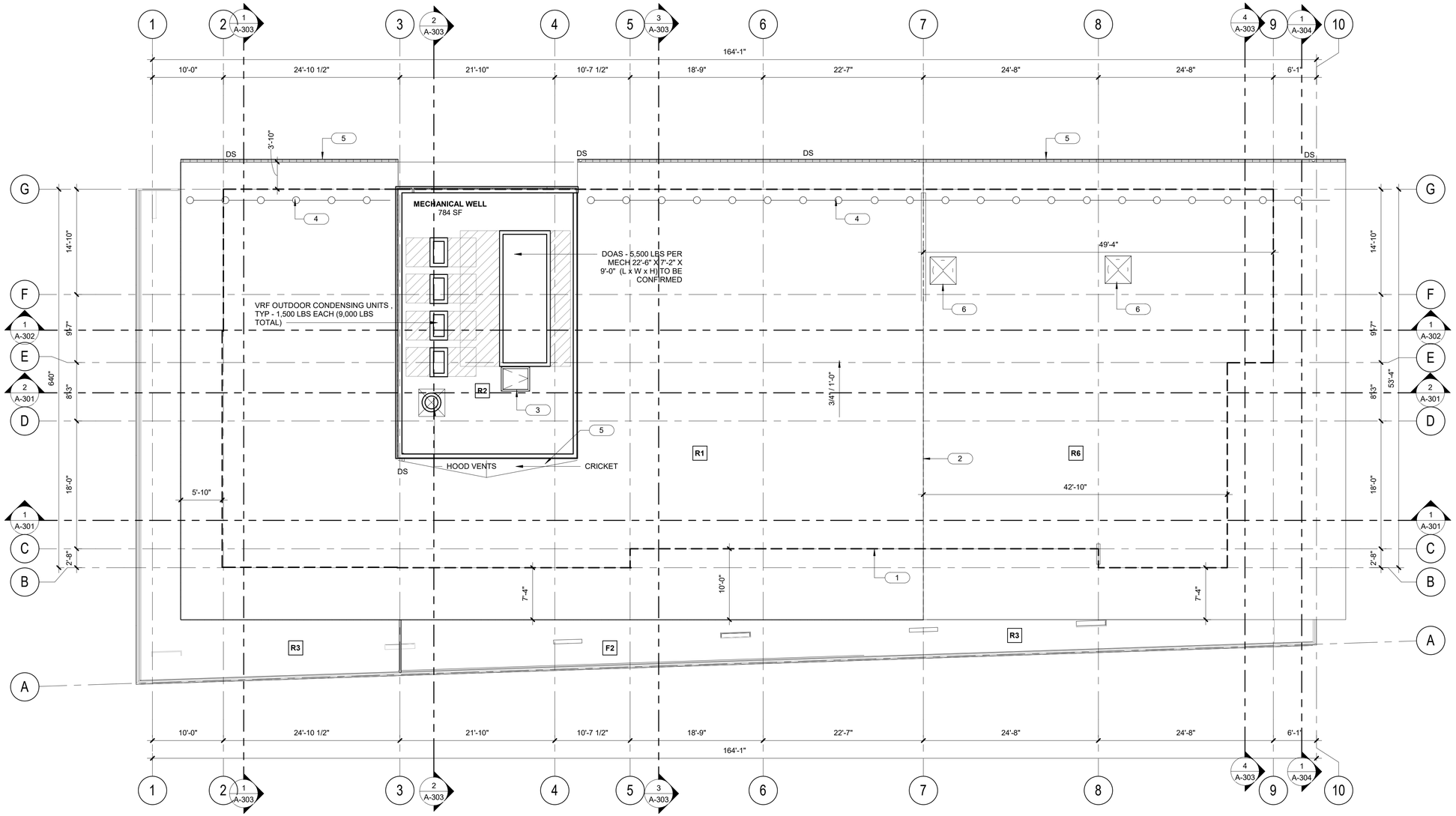

1 ROOF PLAN

1/8" = 1'-0"

TRUE NORTH

0 4 8 16

SCALE: 1/8" = 1'-0"

ROOF PLAN LEGEND

- CONTINUOUS SHEET METAL GUTTER
- 4" PVC DOWNSPOUT, PAINT
- CRICKET TO PROVIDE SLOPE TO DRAIN - TAPERED RIGID INSULATION
- THRU-WALL SCUPPER, CONDUCTOR HEAD, AND DOWNSPOUT, REFER TO
- ROOF DRAIN AND OVERFLOW ROOF DRAIN, REFER TO
- DS — DOWNSPOUT AND SPLASHBLOCK
- VTR — VENT THRU ROOF, REFER TO MECHANICAL
- STRAP-STYLE ROOF ANCHOR, REFER TO STRUCTURAL DRAWINGS FOR MOUNTING CRITERIA
- WALL ANCHOR, REFER TO STRUCTURAL.
- 4" / 1'-0" — ROOF SLOPE & DIRECTION
- R1 — ROOF ASSEMBLY PER A-622
- SNOW GUARD

ROOF PLAN SHEET NOTES

1. OUTLINE OF BUILDING BELOW
2. INDICATES POINT OF TRANSITION BETWEEN R1 AND R6 ASSEMBLY
3. ROOF ACCESS HATCH
4. SNOWGUARD
5. GUTTER LOCATION
6. HOOD VENTS; REFER TO MECHANICAL FOR ADDITIONAL INFORMATION

ROOF PLAN GENERAL NOTES

1. REFER TO A-622 FOR ROOF ASSEMBLY TYPES.
2. SEE ALSO FLOOR PLANS FOR OBSCURED ROOF ELEMENTS NOT CALLED OUT ON THIS DRAWING.
3. PROVIDE STAINLESS STEEL SPLASH PAN AT ALL DOWNSPOUTS THAT DISCHARGE ONTO LOWER ROOF ASSEMBLIES.

bcra
T 253.627.4367 F 253.627.4395 WWW.BCRADESIGN.COM
2106 PACIFIC AVENUE, SUITE 300, TACOMA, WA 98402

SEAL

PROJECT
PORT OF EVERETT
WINE WALK BUILDING A12
XXXX SEINER DRIVE
EVERETT, WASHINGTON 98201

REVISIONS

DATE 12.14.2023
BCRA NO. 23045.00.00
DRAWN BY: JC, MD
REVIEWED BY: DO, AT
SHEET TITLE ROOF PLAN

© COPYRIGHT 2023 - BCRA, INC. ALL RIGHTS RESERVED

SHEET
A-161
PROGRESS SET

IF SHEET MEASURES LESS THAN 22"X34", IT IS A REDUCED PRINT. REDUCE SCALE ACCORDINGLY

22x34 12/14/2023 4:15:46 PM

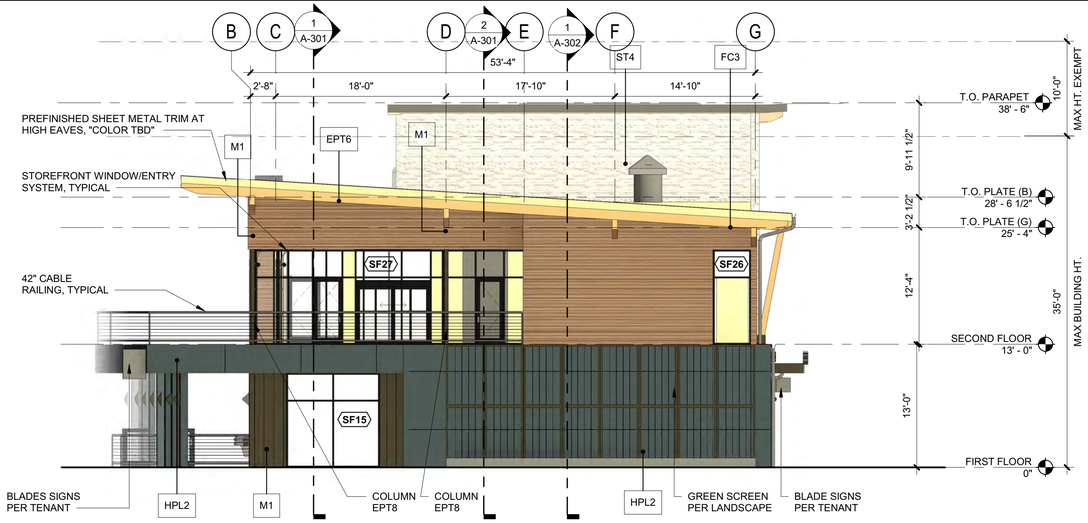

2 EXTERIOR ELEVATION - SOUTH

1/8" = 1'-0"

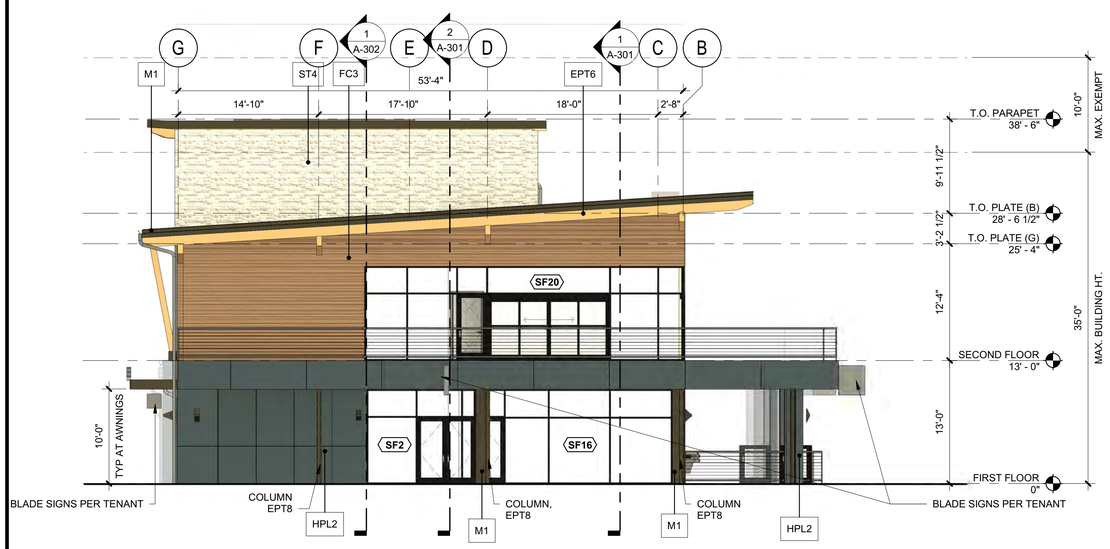

1 EXTERIOR ELEVATION - NORTH

1/8" = 1'-0"

0 4 8 16

SCALE: 1/8" = 1'-0"

EXTERIOR FINISH SCHEDULE

	ITEM	MATERIAL	FINISH	REMARKS / COLOR
M1	METAL PANEL SIDING	SHEET METAL	FACTORY KYNAR FINISH	COLOR: COOL DARK BRONZE
HPL2	PHENOLIC PANEL SIDING	PHENOLIC PANEL	FACTORY FINISH	COLOR: SW 7615 SEA SERPENT
FC3	FIBER CEMENT LAP SIDING	FIBER CEMENT	FACTORY FINISH	COLOR: WOODTONE-SUMMER WHEAT
ST4	STONE	STONE	FACTORY FINISH	COLOR: EL DORADO GLACIER
PFSM5	PRE-FINISHED SHEET METAL	SHEET METAL	FACTORY FINISH	COLOR: COOL DARK BRONZE
PFSM5	CONTINUOUS GUTTER/DOWNSPOUT	SHEET METAL	FACTORY KYNAR FINISH	COLOR: COOL DARK BRONZE
EPT6	EXTERIOR PAINT	PAINT- SEMI TRANSPARENT STAIN	FIELD PAINT	COLOR: SHERWIN WILLIAMS-BAJA BEIGE
M7	METAL ROOF	SHEET METAL	FACTORY KYNAR FINISH	COLOR: COOL METALLIC SILVER (TBD)
EPT8	EXTERIOR PAINT	STEEL	FACTORY FINISH	COLOR: MATCH COOL DARK BRONZE
HPL9	PHENOLIC PANEL SIDING	PHENOLIC PANEL	FACTORY FINISH	COLOR: BLACK

EXTERIOR ELEVATION COLOR AND MATERIAL LEGEND

M1 — EXTERIOR MATERIAL TAG
- COLOR DESIGNATION
- MATERIAL DESIGNATION

MATERIAL DESIGNATIONS

FC	FIBER CEMENT
M	METAL PANEL SIDING
ST	STONE
PSFM	PRE FINISHED SHEET METAL
EPT	EXTERIOR PAINT
HPL	HIGH PRESSURE PANEL

COLOR DESIGNATIONS

1 AEP SPAN COLOR - COOL DARK BRONZE

2 PHENOLIC PANEL - SW 7615 SEA SERPENT

3 WOODTONE COLOR - SUMMER WHEAT

4 STONE - EL DORADO STONE- GLACIER

EXTERIOR ELEVATION GENERAL NOTES

1. REFER TO A-591 FOR TYPICAL SIDING REVEAL AND TRANSITION DETAILS.
2. REFER TO A-591 AND A-592 FOR TYPICAL TRIMS, FLASHINGS, AND AIR BARRIER TRANSITIONS AT PENETRATIONS OF EXTERIOR WALLS.
3. REFER ALSO TO MECHANICAL, ELECTRICAL, TELECOM AND FIRE PROTECTION DRAWINGS FOR LOCATIONS OF WORK/DEVICES REQUIRING PENTRATIONS NOT SHOWN ON EXTERIOR ELEVATIONS. PROVIDE BACKING, TRIMS, FLASHINGS, AND AIR BARRIER TRANSITIONS AT PENETRATIONS AND SURFACE-MOUNTED ITEMS ON EXTERIOR WALLS.
4. REFER TO WINDOW AND STOREFRONT TYPES FOR STANDARD SHADING CONDITIONS.

KEY PLAN

bcra
T 253.627.4367 F 253.627.4395 WWW.BCRADESIGN.COM
2106 PACIFIC AVENUE, SUITE 300, TACOMA, WA 98402

SEAL

PROJECT
PORT OF EVERETT
WINE WALK BUILDING A12
XXXX SEINER DRIVE
EVERETT, WASHINGTON 98201

REVISIONS

DATE
12.14.2023

BCRA NO.
23045.00.00

DRAWN BY: JC, MD

REVIEWED BY: DO, AT

SHEET TITLE
EXTERIOR ELEVATIONS

bcra

© COPYRIGHT 2023 - BCRA, INC. ALL RIGHTS RESERVED

SHEET
A-201

PROGRESS SET

IF SHEET MEASURES LESS THAN 22"X34", IT IS A REDUCED PRINT. REDUCE SCALE ACCORDINGLY

22x34 12/14/2023 2:52:05 PM

2 EXTERIOR ELEVATION - EAST

1/8" = 1'-0"

1 EXTERIOR ELEVATION - WEST

1/8" = 1'-0"

0 4 8 16

SCALE: 1/8" = 1'-0"

EXTERIOR FINISH SCHEDULE

	ITEM	MATERIAL	FINISH	REMARKS / COLOR
M1	METAL PANEL SIDING	SHEET METAL	FACTORY KYNAR FINISH	COLOR: COOL DARK BRONZE
HPL2	PHENOLIC PANEL SIDING	PHENOLIC PANEL	FACTORY FINISH	COLOR: SW 7615 SEA SERPENT
FC3	FIBER CEMENT LAP SIDING	FIBER CEMENT	FACTORY FINISH	COLOR: WOODTONE-SUMMER WHEAT
ST4	STONE	STONE	FACTORY FINISH	COLOR: EL DORADO GLACIER
PFSM5	PRE-FINISHED SHEET METAL	SHEET METAL	FACTORY FINISH	COLOR: COOL DARK BRONZE
PFSM5	CONTINUOUS GUTTER/DOWNSPOUT	SHEET METAL	FACTORY KYNAR FINISH	COLOR: COOL DARK BRONZE
EPT6	EXTERIOR PAINT	PAINT- SEMI TRANSPARENT STAIN	FIELD PAINT	COLOR: SHERWIN WILLIAMS-BAJA BEIGE
M7	METAL ROOF	SHEET METAL	FACTORY KYNAR FINISH	COLOR: COOL METALLIC SILVER (TBD)
EPT8	EXTERIOR PAINT	STEEL	FACTORY FINISH	COLOR: MATCH COOL DARK BRONZE
HPL9	PHENOLIC PANEL SIDING	PHENOLIC PANEL	FACTORY FINISH	COLOR: BLACK

EXTERIOR ELEVATION COLOR AND MATERIAL LEGEND

M1 — EXTERIOR MATERIAL TAG
COLOR DESIGNATION
MATERIAL DESIGNATION

MATERIAL DESIGNATIONS

FC	FIBER CEMENT LAP SIDING
M	METAL PANEL SIDING
ST	STONE
PSFM	PRE FINISHED SHEET METAL
EPT	EXTERIOR PAINT
HPL	HIGH PRESSURE PANEL

COLOR DESIGNATIONS

1 AEP SPAN COLOR - COOL DARK BRONZE

2 PHENOLIC PANEL- SW 7615 SEA SERPENT

3 WOODTONE COLOR - TBD

4 STONE - EL DORADO STONE- GLACIER

EXTERIOR ELEVATION GENERAL NOTES

1. REFER TO A-591 FOR TYPICAL SIDING REVEAL AND TRANSITION DETAILS.
2. REFER TO A-591 AND A-592 FOR TYPICAL TRIMS, FLASHINGS, AND AIR BARRIER TRANSITIONS AT PENETRATIONS OF EXTERIOR WALLS.
3. REFER ALSO TO MECHANICAL, ELECTRICAL, TELECOM AND FIRE PROTECTION DRAWINGS FOR LOCATIONS OF WORK/DEVICES REQUIRING PENTRATIONS NOT SHOWN ON EXTERIOR ELEVATIONS. PROVIDE BACKING, TRIMS, FLASHINGS, AND AIR BARRIER TRANSITIONS AT PENETRATIONS AND SURFACE-MOUNTED ITEMS ON EXTERIOR WALLS.
4. REFER TO WINDOW AND STOREFRONT TYPES FOR STANDARD SHADING CONDITIONS.

KEY PLAN

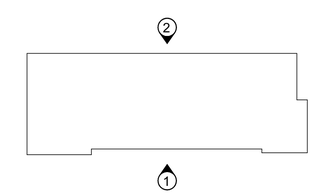

bcra
T 253.627.4367 F 253.627.4395 WWW.BCRADESIGN.COM
2106 PACIFIC AVENUE, SUITE 300, TACOMA, WA 98402

SEAL

PROJECT
PORT OF EVERETT
WINE WALK BUILDING A12
XXXX SEINER DRIVE
EVERETT, WASHINGTON 98201

REVISIONS

DATE
12.14.2023

BCRA NO.
23045.00.00

DRAWN BY: JC, MD

REVIEWED BY: DO, AT

SHEET TITLE
EXTERIOR ELEVATIONS

bcra

© COPYRIGHT 2023 - BCRA, INC. ALL RIGHTS RESERVED

SHEET
A-202

PROGRESS SET

IF SHEET MEASURES LESS THAN 22"X34", IT IS A REDUCED PRINT. REDUCE SCALE ACCORDINGLY

22x34 12/14/2023 2:52:13 PM

INTERIOR ELEVATION GENERAL NOTES

1. COORDINATE LOCATION OF WORK/DEVICES SHOWN ON MECHANICAL, ELECTRICAL, TELECOM AND FIRE PROTECTION DRAWINGS AND NOT SHOWN ON INTERIOR ELEVATIONS.

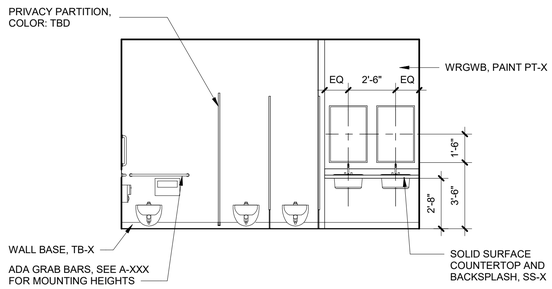

12 PUBLIC RR - WOMENS - SOUTH
1/4" = 1'-0"

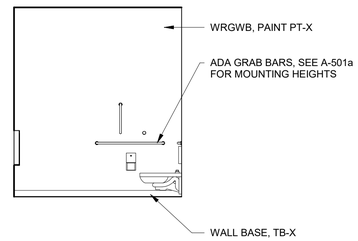

11 PUBLIC RR - WOMENS - EAST
1/4" = 1'-0"

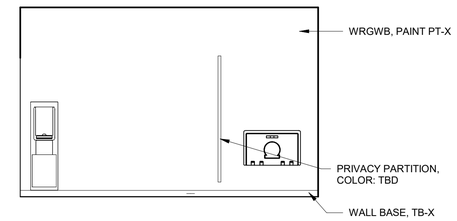

10 PUBLIC RR - WOMENS - NORTH
1/4" = 1'-0"

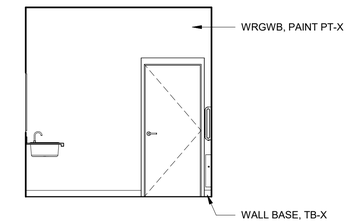

9 PUBLIC RR - WOMENS - WEST
1/4" = 1'-0"

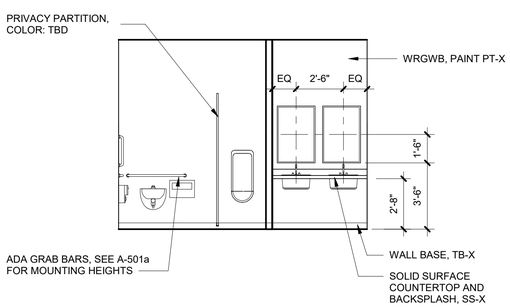

8 PUBLIC RR - MENS - SOUTH
1/4" = 1'-0"

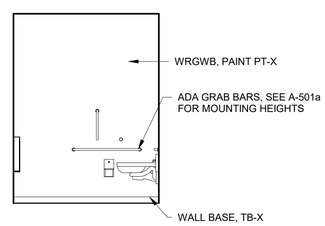

7 PUBLIC RR - MENS - EAST
1/4" = 1'-0"

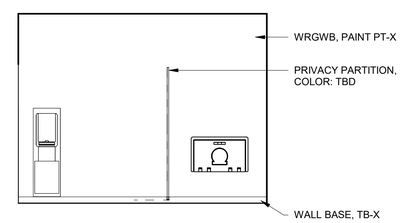

6 PUBLIC RR - MENS - NORTH
1/4" = 1'-0"

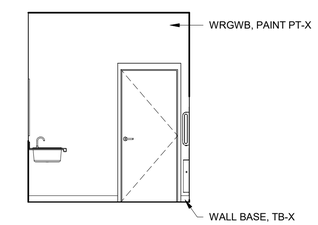

5 PUBLIC RR - MENS - WEST
1/4" = 1'-0"

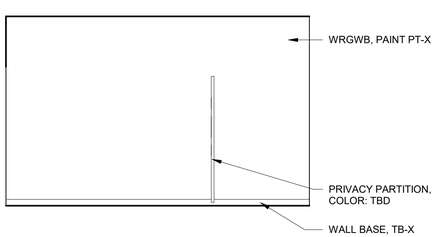

4 TENANT RR - MEN'S - SOUTH
1/4" = 1'-0"

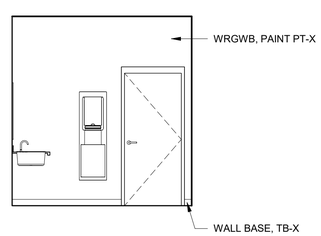

3 TENANT RR - MEN'S - EAST
1/4" = 1'-0"

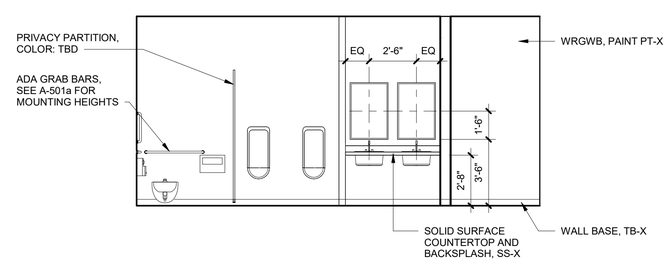

2 TENANT RR - MENS - NORTH
1/4" = 1'-0"

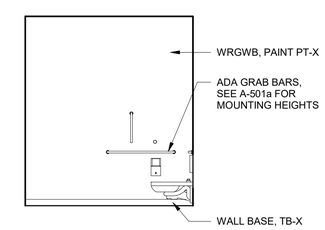

1 TENANT RR - MEN'S - WEST
1/4" = 1'-0"

IF SHEET MEASURES LESS THAN 22"X34", IT IS A REDUCED PRINT. REDUCE SCALE ACCORDINGLY

22x34 12/14/2023 4:16:29 PM

bcra
T 253.627.4367 F 253.627.4395 WWW.BCRADESIGN.COM
2106 PACIFIC AVENUE, SUITE 300, TACOMA, WA 98402

SEAL

PROJECT
PORT OF EVERETT
WINE WALK BUILDING A12
XXXX SEINER DRIVE
EVERETT, WASHINGTON 98201

REVISIONS

DATE
12.14.2023
BCRA NO.
23045.00.00
DRAWN BY: Author
REVIEWED BY:
SHEET TITLE
INTERIOR ELEVATIONS

bcra
© COPYRIGHT 2023 - BCRA, INC. ALL RIGHTS RESERVED

SHEET
A-211
PROGRESS SET

INTERIOR ELEVATION GENERAL NOTES

1. COORDINATE LOCATION OF WORK/DEVICES SHOWN ON MECHANICAL, ELECTRICAL, TELECOM AND FIRE PROTECTION DRAWINGS AND NOT SHOWN ON INTERIOR ELEVATIONS.

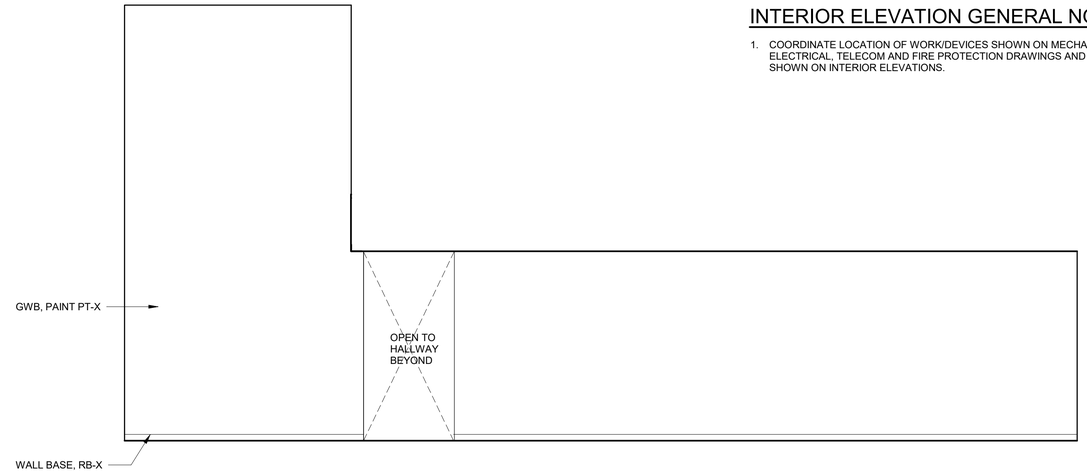

8 HALLWAY 102 - SOUTH
1/4" = 1'-0"

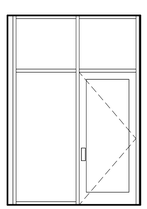

7 HALLWAY 102 - WEST
1/4" = 1'-0"

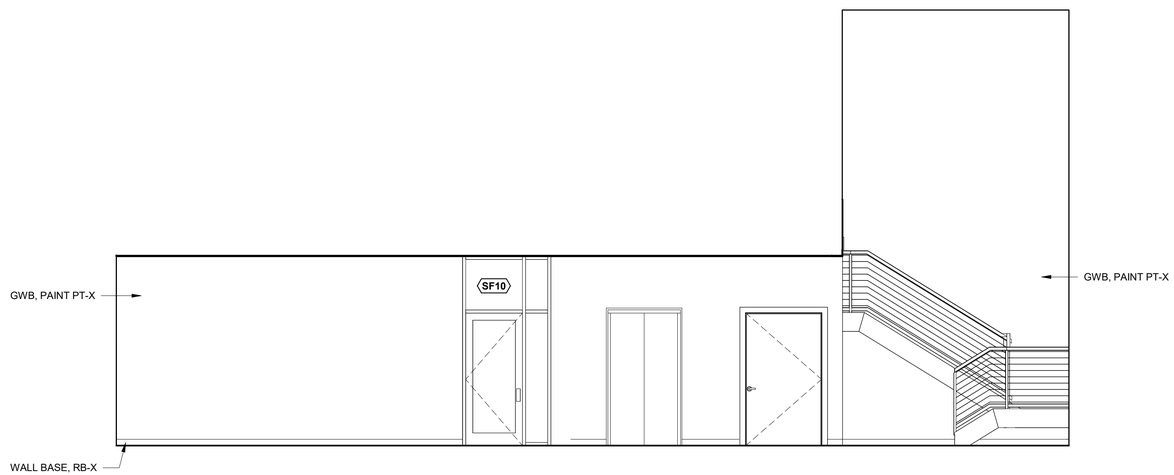

6 HALLWAY 102 - NORTH
1/4" = 1'-0"

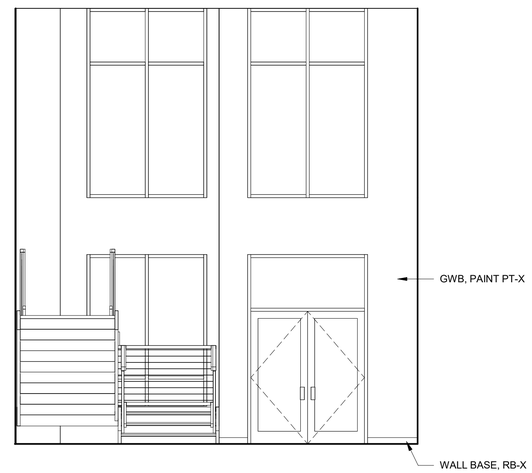

5 HALLWAY 102 - EAST
1/4" = 1'-0"

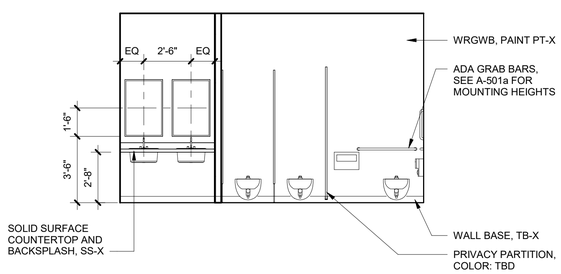

4 TENANT RR - WOMENS - SOUTH
1/4" = 1'-0"

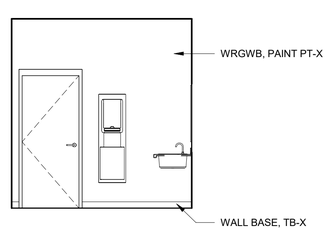

3 TENANT RR - WOMENS - EAST
1/4" = 1'-0"

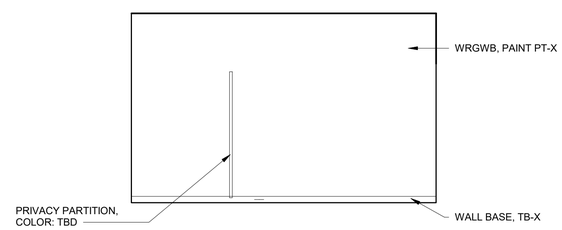

2 TENANT RR - WOMENS - NORTH
1/4" = 1'-0"

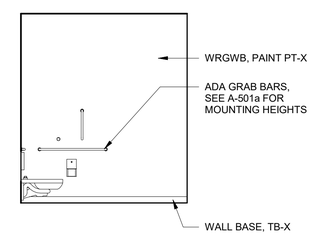

1 TENANT RR - WOMENS - WEST
1/4" = 1'-0"

IF SHEET MEASURES LESS THAN 22"X34", IT IS A REDUCED PRINT. REDUCE SCALE ACCORDINGLY

22x34 12/14/2023 4:16:22 PM

bcra
T 253.627.4367 F 253.627.4395 WWW.BCRADESIGN.COM
2106 PACIFIC AVENUE, SUITE 300, TACOMA, WA 98402

SEAL

PROJECT
PORT OF EVERETT
WINE WALK BUILDING A12
XXXX SEINER DRIVE
EVERETT, WASHINGTON 98201

REVISIONS

DATE
12.14.2023
BCRA NO.
23045.00.00
DRAWN BY: Author
REVIEWED BY:
SHEET TITLE
INTERIOR ELEVATIONS

bcra
© COPYRIGHT 2023 - BCRA, INC. ALL RIGHTS RESERVED.

SHEET
A-212
PROGRESS SET

INTERIOR ELEVATION GENERAL NOTES

1. COORDINATE LOCATION OF WORK/DEVICES SHOWN ON MECHANICAL, ELECTRICAL, TELECOM AND FIRE PROTECTION DRAWINGS AND NOT SHOWN ON INTERIOR ELEVATIONS.

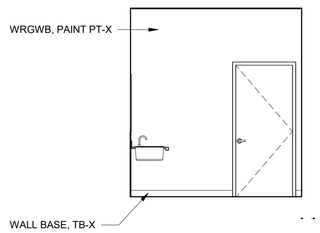

10 SECOND FLOOR RESTROOM - MEN'S - SOUTH
1/4" = 1'-0"

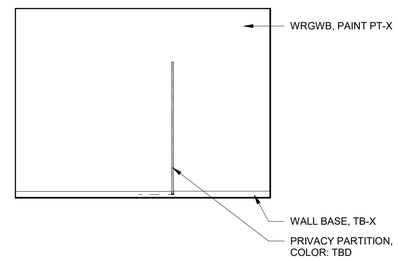

11 SECOND FLOOR RESTROOM - MEN'S - WEST
1/4" = 1'-0"

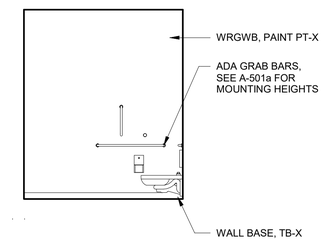

12 SECOND FLOOR RESTROOM - MEN'S - NORTH
1/4" = 1'-0"

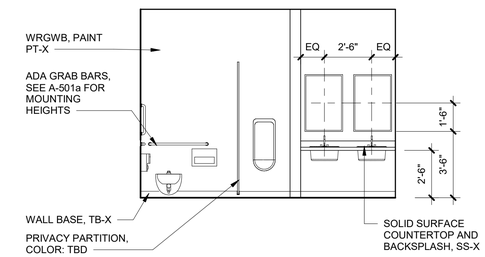

9 SECOND FLOOR RESTROOM - MEN'S - EAST
1/4" = 1'-0"

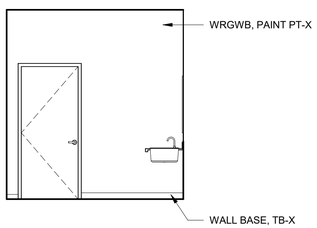

8 SECOND FLOOR RESTROOM - WOMEN'S - SOUTH
1/4" = 1'-0"

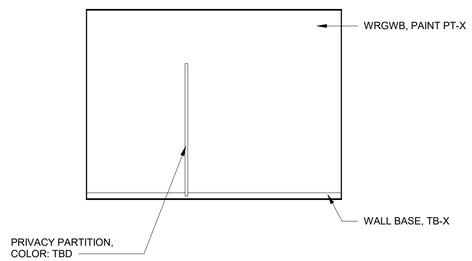

7 SECOND FLOOR RESTROOM - WOMEN'S - EAST
1/4" = 1'-0"

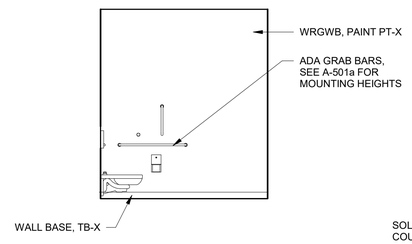

6 SECOND FLOOR RESTROOM - WOMEN'S - NORTH
1/4" = 1'-0"

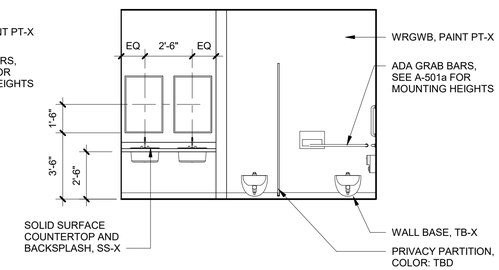

5 SECOND FLOOR RESTROOM - WOMEN'S - WEST
1/4" = 1'-0"

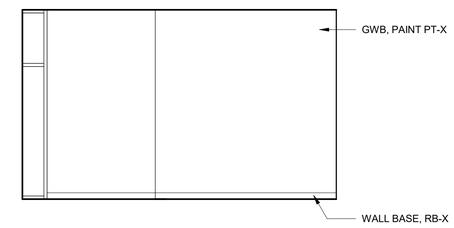

4 HALLWAY 202 - WEST
1/4" = 1'-0"

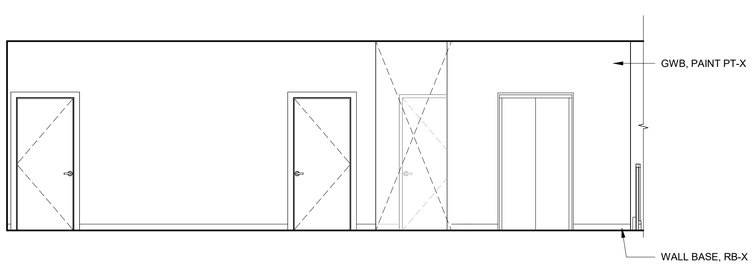

3 HALLWAY 202 - NORTH
1/4" = 1'-0"

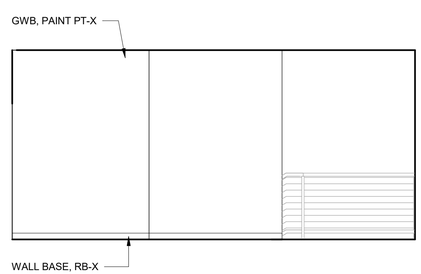

2 HALLWAY 202 - EAST
1/4" = 1'-0"

1 HALLWAY 202 - SOUTH
1/4" = 1'-0"

bcra
T 253.627.4367 F 253.627.4395 WWW.BCRADESIGN.COM
2106 PACIFIC AVENUE, SUITE 300, TACOMA, WA 98402

SEAL

PROJECT
PORT OF EVERETT
WINE WALK BUILDING A12
XXXX SEINER DRIVE
EVERETT, WASHINGTON 98201

REVISIONS

DATE
12.14.2023
BCRA NO.
23045.00.00
DRAWN BY: Author
REVIEWED BY:
SHEET TITLE
INTERIOR ELEVATIONS

bcra
© COPYRIGHT 2023 - BCRA, INC. ALL RIGHTS RESERVED

SHEET
A-213
PROGRESS SET

22x24 12/14/2023 4:16:24 PM

IF SHEET MEASURES LESS THAN 22"X34", IT IS A REDUCED PRINT. REDUCE SCALE ACCORDINGLY

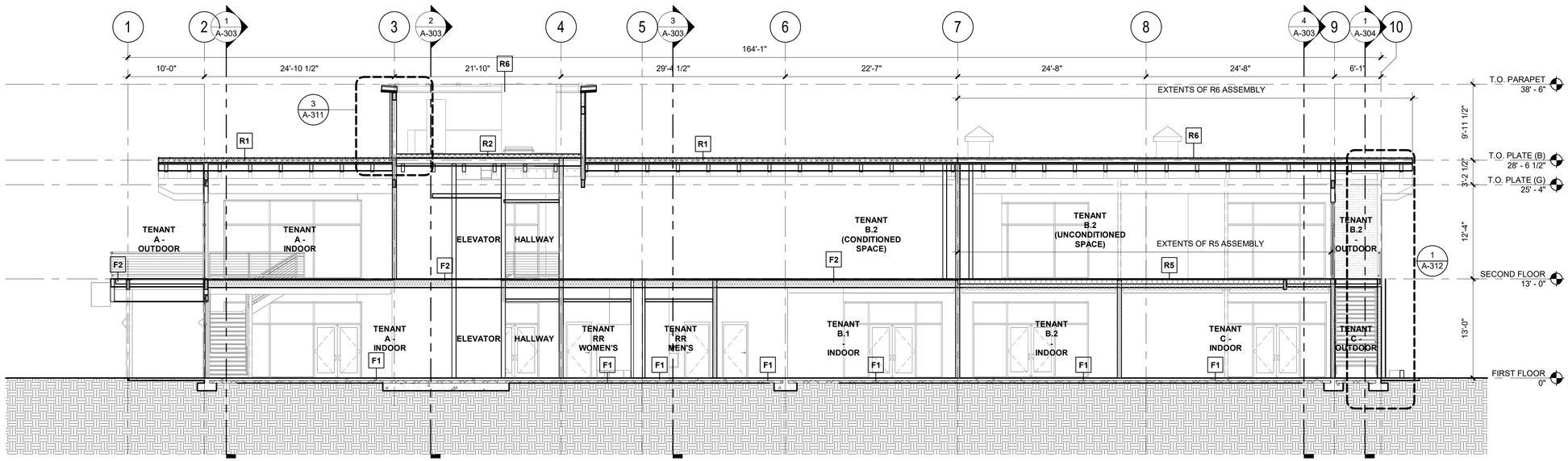

2 BUILDING SECTION - LOOKING NORTH

1/8" = 1'-0"

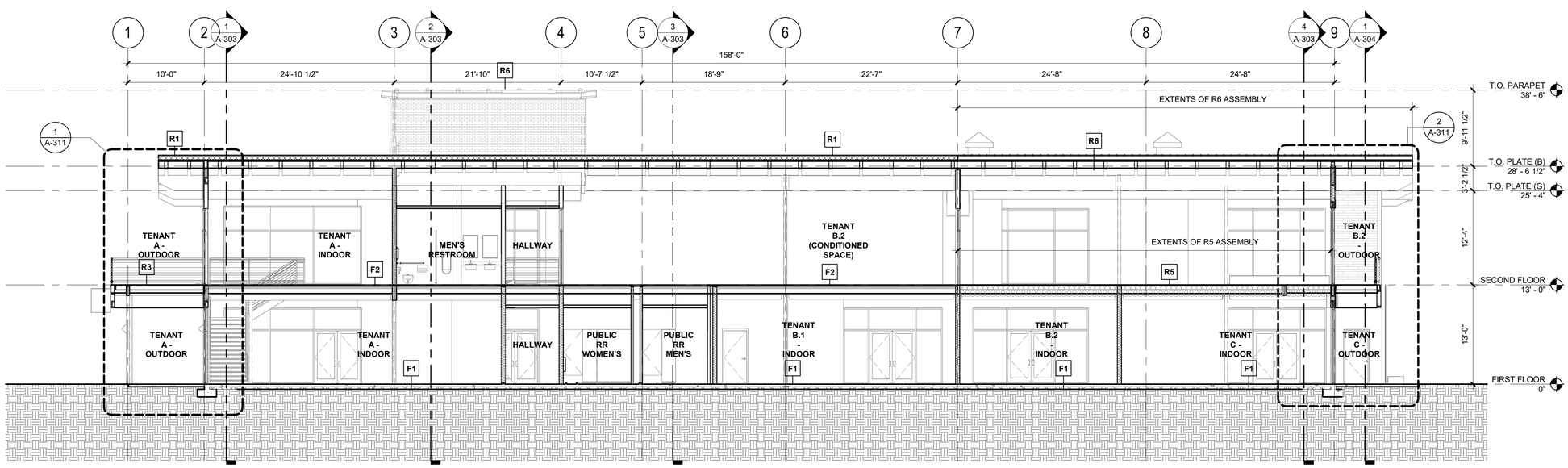

1 BUILDING SECTION - LOOKING NORTH

1/8" = 1'-0"

0 4 8 16

SCALE: 1/8" = 1'-0"

IF SHEET MEASURES LESS THAN 22"X34", IT IS A REDUCED PRINT. REDUCE SCALE ACCORDINGLY

22x34 12/14/2023 4:16:26 PM

bcra
T 253.627.4367 F 253.627.4395 WWW.BCRADESIGN.COM
2106 PACIFIC AVENUE, SUITE 300, TACOMA, WA 98402

SEAL

PROJECT
PORT OF EVERETT
WINE WALK BUILDING A12
XXXX SEINER DRIVE
EVERETT, WASHINGTON 98201

REVISIONS

DATE
12.14.2023

BCRA NO.
23045.00.00

DRAWN BY: JC

REVIEWED BY: DD

SHEET TITLE
BUILDING SECTIONS

bcra

© COPYRIGHT 2023 - BCRA, INC. ALL RIGHTS RESERVED

SHEET

A-301

PROGRESS SET

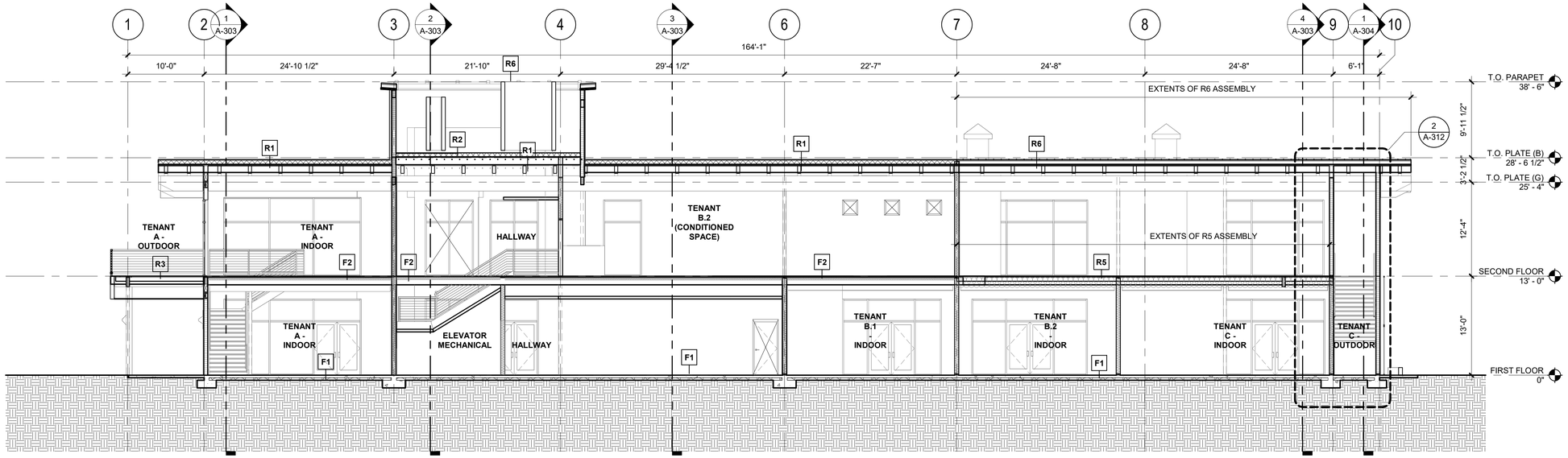

1 BUILDING SECTION - LOOKING NORTH

1/8" = 1'-0"

0 4 8 16

SCALE: 1/8" = 1'-0"

2x34 12/14/2023 4:16:27 PM

IF SHEET MEASURES LESS THAN 22"X34", IT IS A REDUCED PRINT. REDUCE SCALE ACCORDINGLY

bcra
T 253.627.4367 F 253.627.4395 WWW.BCRADESIGN.COM
2106 PACIFIC AVENUE, SUITE 300, TACOMA, WA 98402

SEAL

PROJECT
PORT OF EVERETT
WINE WALK BUILDING A12
XXXX SEINER DRIVE
EVERETT, WASHINGTON 98201

REVISIONS

DATE
12.14.2023

BCRA NO.
23045.00.00

DRAWN BY: JC

REVIEWED BY: DD

SHEET TITLE
BUILDING SECTIONS

bcra

© COPYRIGHT 2023 - BCRA, INC. ALL RIGHTS RESERVED.

SHEET

A-302

PROGRESS SET

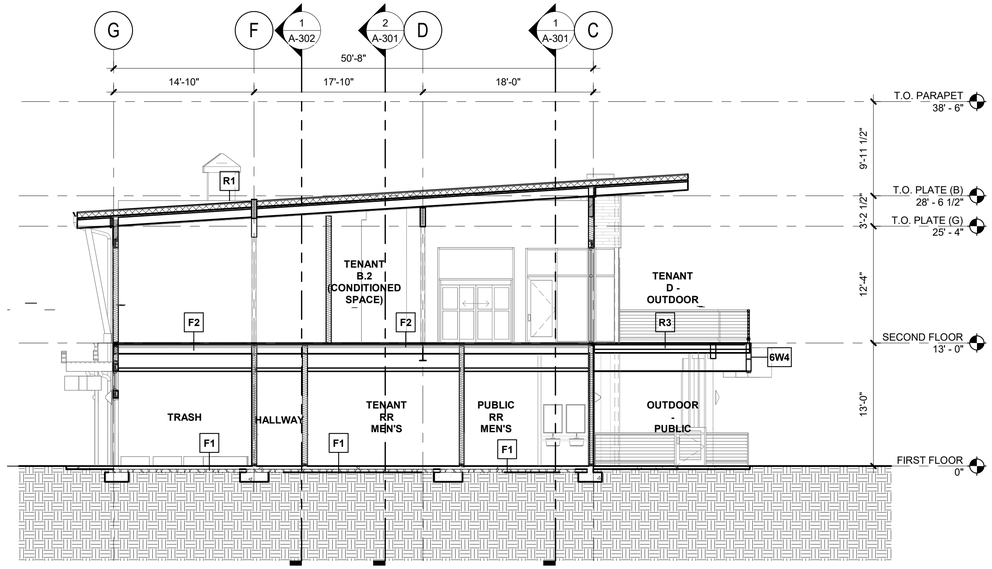

3 BUILDING SECTION - LOOKING EAST
1/8" = 1'-0"

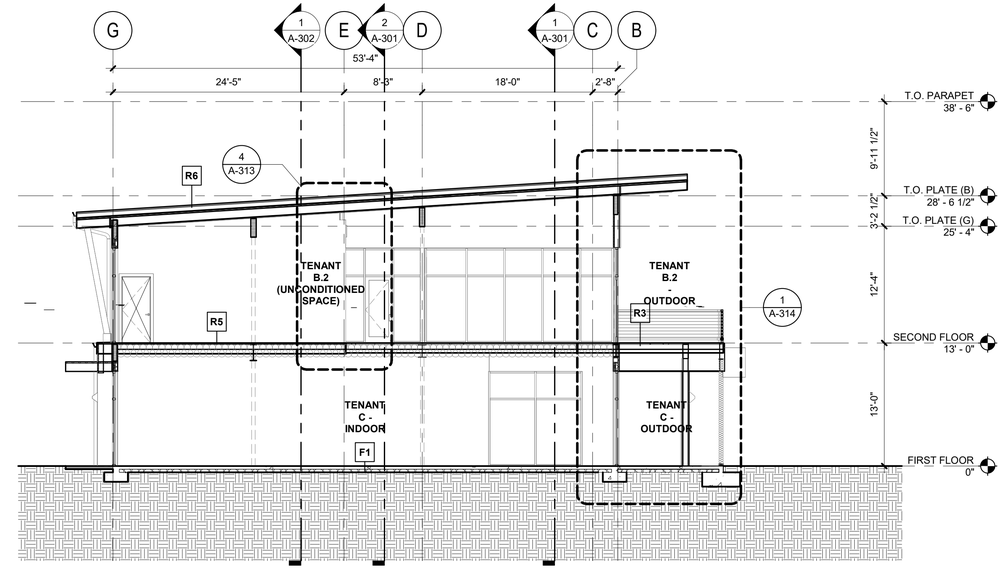

4 BUILDING SECTION - LOOKING EAST
1/8" = 1'-0"

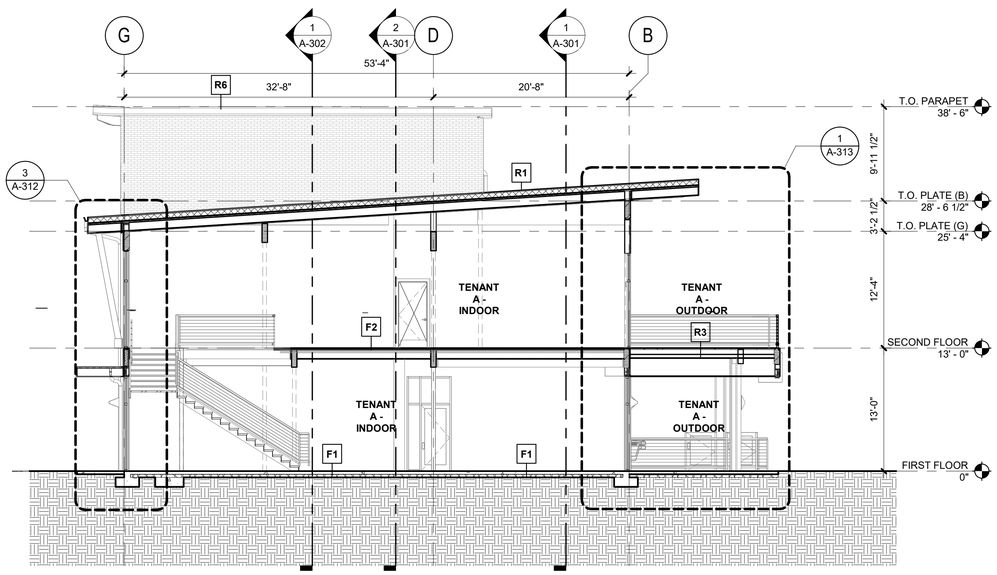

1 BUILDING SECTION - LOOKING EAST
1/8" = 1'-0"

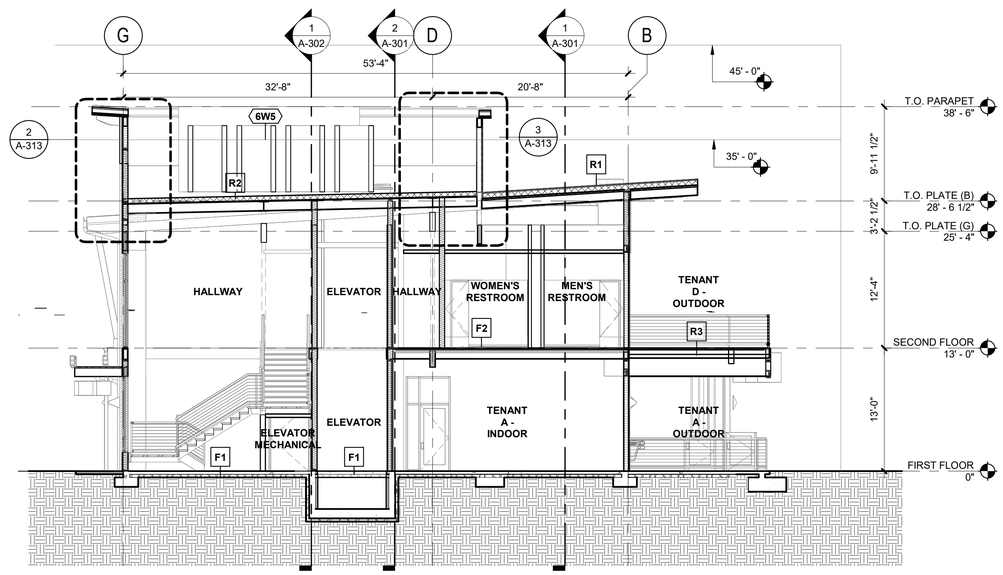

2 BUILDING SECTION - LOOKING EAST
1/8" = 1'-0"

0 4 8 16
SCALE: 1/8" = 1'-0"

22x34 12/14/2023 4:16:31 PM

bcra
T 253.627.4367 F 253.627.4395 WWW.BCRADESIGN.COM
2106 PACIFIC AVENUE, SUITE 300, TACOMA, WA 98402

SEAL

PROJECT
PORT OF EVERETT
WINE WALK BUILDING A12
XXXX SEINER DRIVE
EVERETT, WASHINGTON 98201

REVISIONS

DATE
12.14.2023
BCRA NO.
23045.00.00
DRAWN BY: JC
REVIEWED BY: DD
SHEET TITLE
BUILDING SECTIONS

bcra
© COPYRIGHT 2023 - BCRA, INC. ALL RIGHTS RESERVED

SHEET
A-303
PROGRESS SET

IF SHEET MEASURES LESS THAN 22"X34", IT IS A REDUCED PRINT. REDUCE SCALE ACCORDINGLY

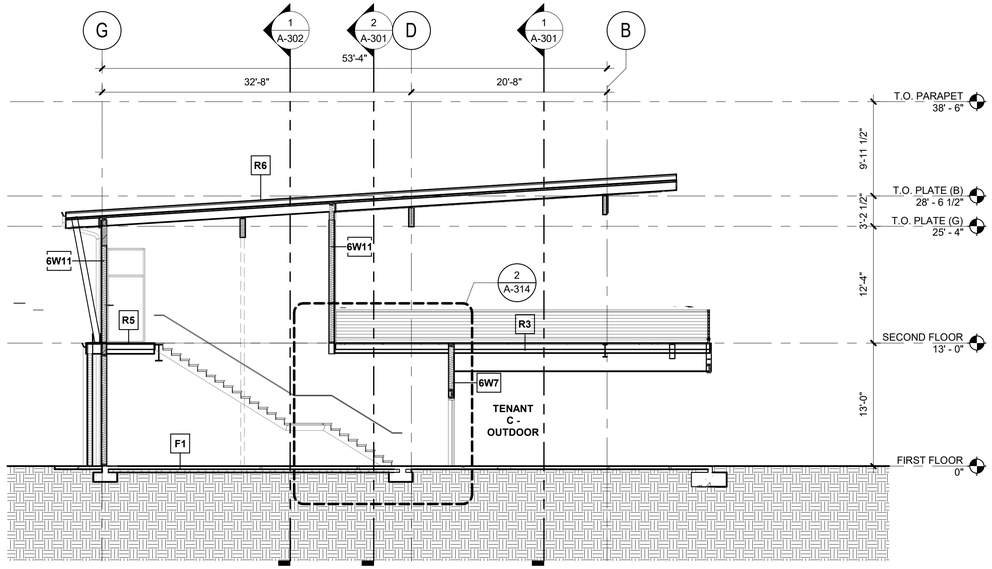

1 BUILDING SECTION - LOOKING EAST
1/8" = 1'-0"

0 4 8 16
SCALE: 1/8" = 1'-0"

22x34 12/14/2023 4:16:32 PM

bcra
T 253.627.4367 F 253.627.4395 WWW.BCRADESIGN.COM
2106 PACIFIC AVENUE, SUITE 300, TACOMA, WA 98402

SEAL

PROJECT
PORT OF EVERETT
WINE WALK BUILDING A12
XXXX SEINER DRIVE
EVERETT, WASHINGTON 98201

REVISIONS

DATE
12.14.2023
BCRA NO.
23045.00.00
DRAWN BY: JC
REVIEWED BY: DD
SHEET TITLE
BUILDING SECTIONS

bcra
© COPYRIGHT 2023 - BCRA, INC. ALL RIGHTS RESERVED.
SHEET
A-304
PROGRESS SET

IF SHEET MEASURES LESS THAN 22"X34", IT IS A REDUCED PRINT. REDUCE SCALE ACCORDINGLY

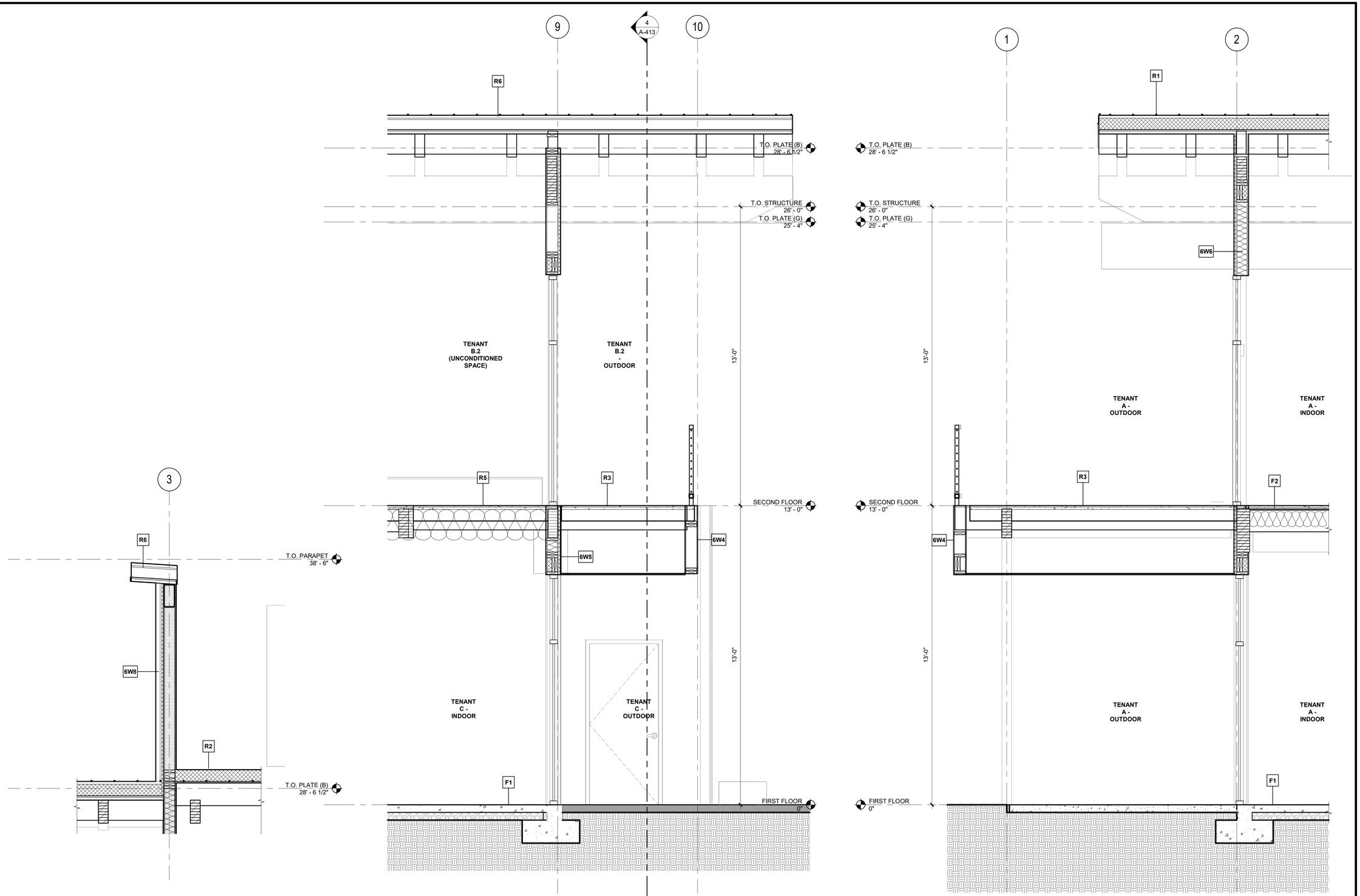

3 WALL SECTION
1/2" = 1'-0"

2 WALL SECTION
1/2" = 1'-0"

1 WALL SECTION
1/2" = 1'-0"

0 1 2 4
SCALE: 1/2" = 1'-0"

IF SHEET MEASURES LESS THAN 22"X34", IT IS A REDUCED PRINT. REDUCE SCALE ACCORDINGLY

22x34 12/14/2023 4:16:32 PM

bcra
T 253.627.4367 F 253.627.4395 WWW.BCRADESIGN.COM
2106 PACIFIC AVENUE, SUITE 300, TACOMA, WA 98402

SEAL

PROJECT
PORT OF EVERETT
WINE WALK BUILDING A12
XXXX SEINER DRIVE
EVERETT, WASHINGTON 98201

REVISIONS

DATE
12.14.2023

BCRA NO.
23045.00.00

DRAWN BY: JC

REVIEWED BY: DD

SHEET TITLE
WALL SECTIONS

bcra

© COPYRIGHT 2023 - BCRA, INC. ALL RIGHTS RESERVED

SHEET
A-311

PROGRESS SET

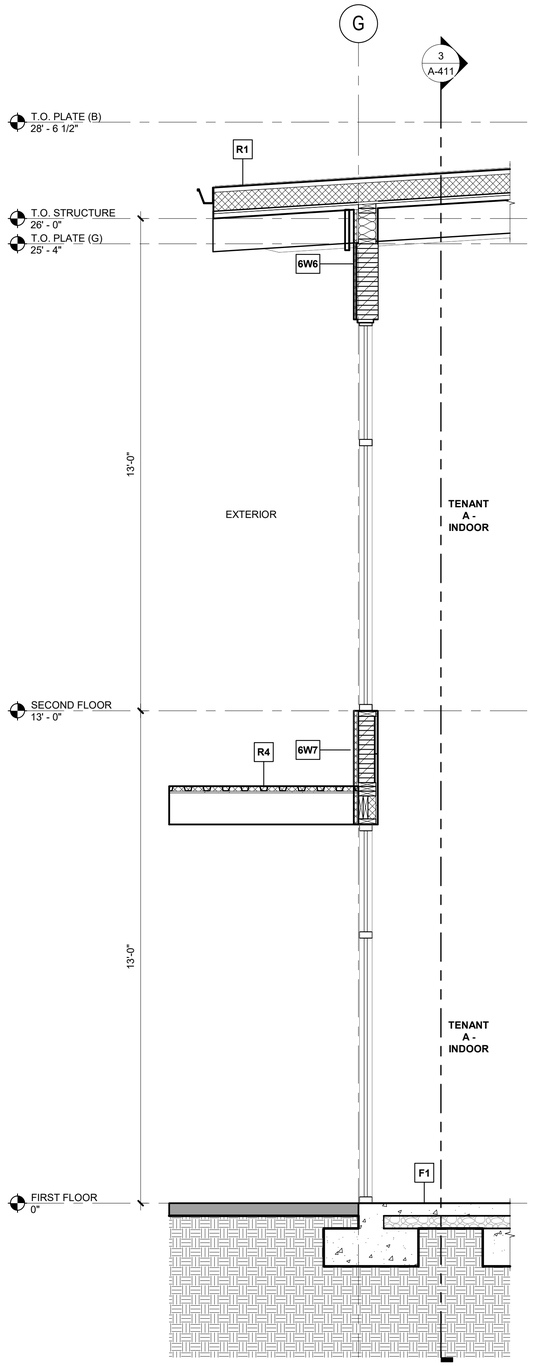

3 WALL SECTION
1/2" = 1'-0"

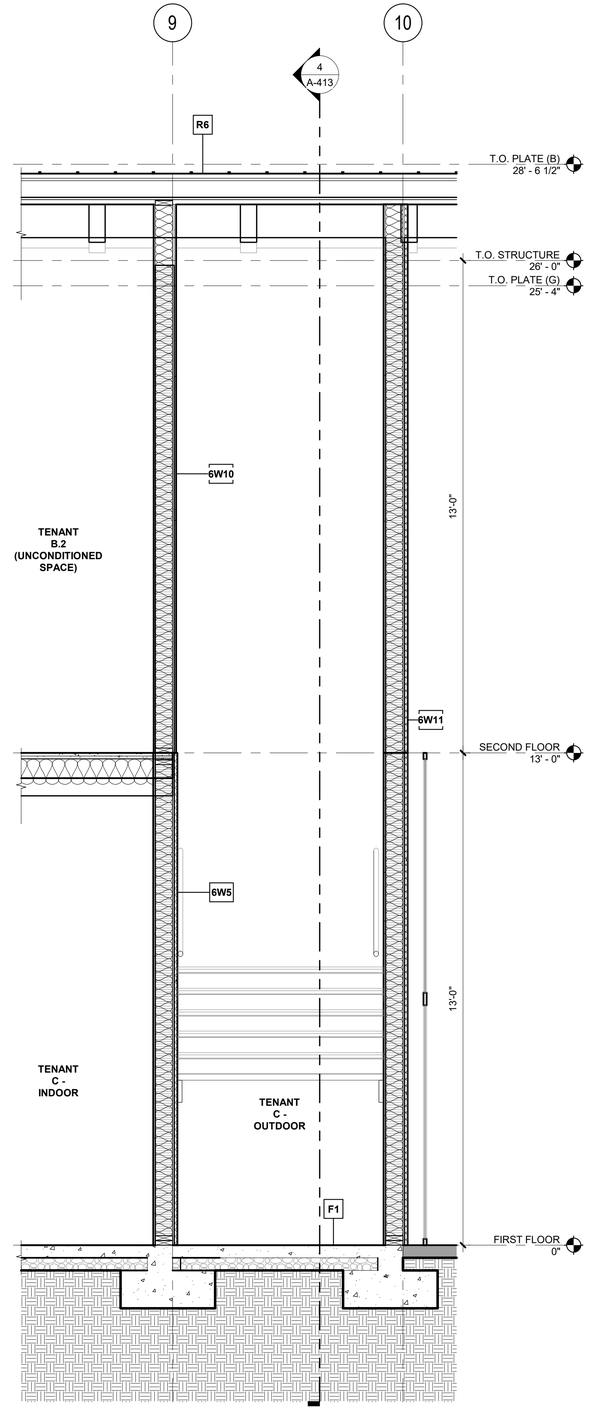

2 WALL SECTION
1/2" = 1'-0"

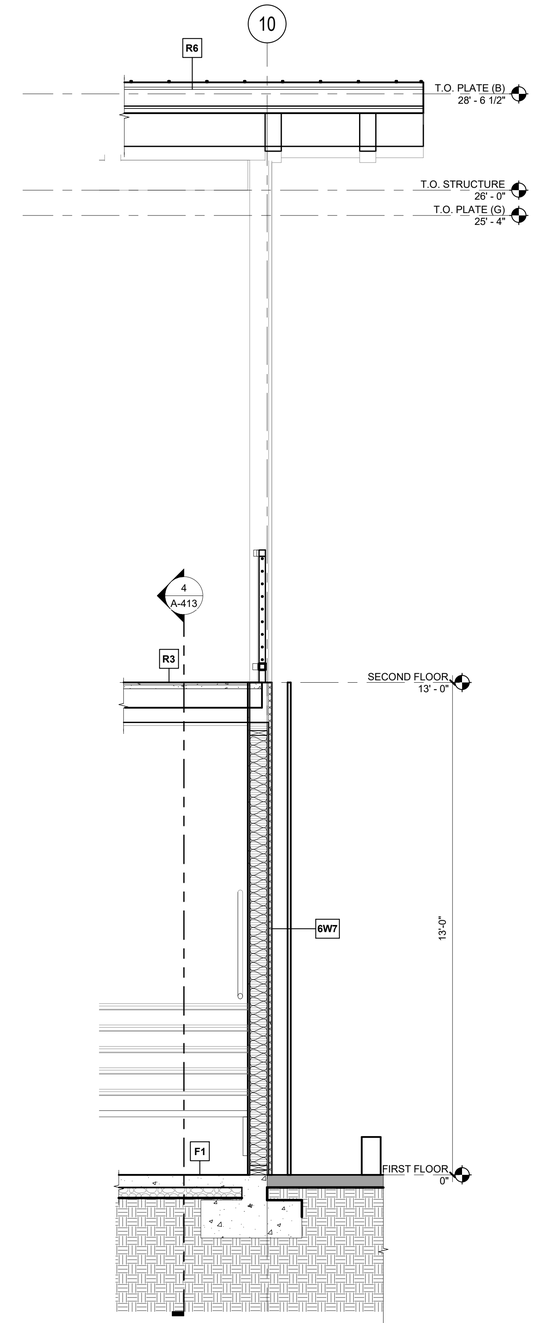

1 WALL SECTION
1/2" = 1'-0"

0 1 2 4
SCALE: 1/2" = 1'-0"

bcra
T 253.627.4367 F 253.627.4395 WWW.BCRADESIGN.COM
2106 PACIFIC AVENUE, SUITE 300, TACOMA, WA 98402

SEAL

PROJECT
PORT OF EVERETT
WINE WALK BUILDING A12
XXXX SEINER DRIVE
EVERETT, WASHINGTON 98201

REVISIONS

DATE
12.14.2023
BCRA NO.
23045.00.00
DRAWN BY: JC
REVIEWED BY: DD
SHEET TITLE
WALL SECTIONS

bcra
© COPYRIGHT 2023 - BCRA, INC. ALL RIGHTS RESERVED
SHEET
A-312
PROGRESS SET

IF SHEET MEASURES LESS THAN 22"X34", IT IS A REDUCED PRINT. REDUCE SCALE ACCORDINGLY

22x34 12/14/2023 4:16:32 PM

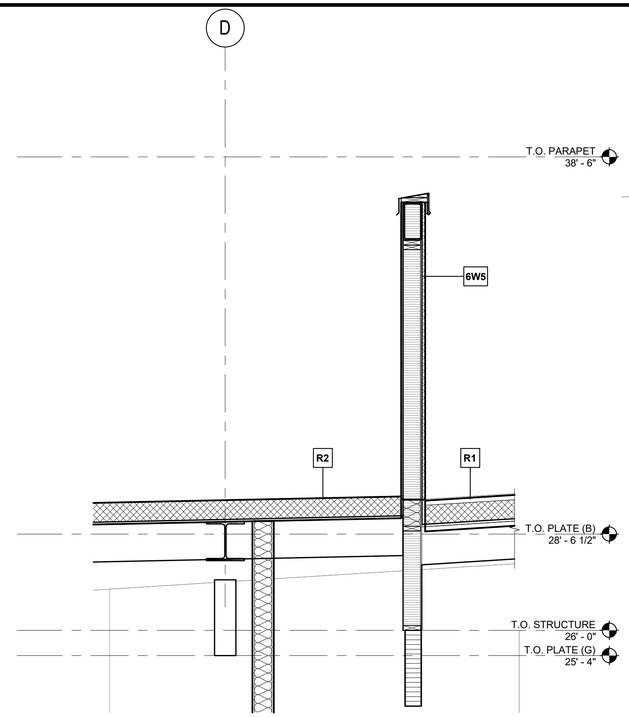

3 WALL SECTION
1/2" = 1'-0"

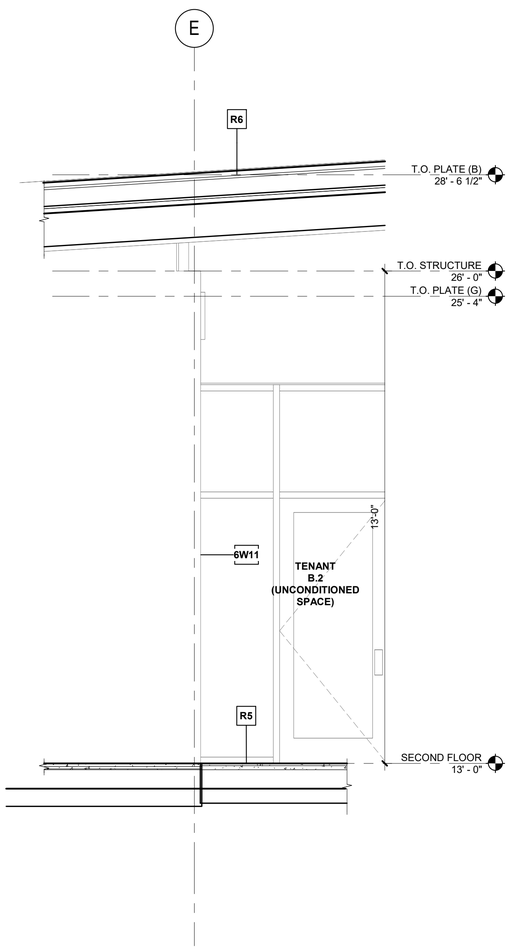

4 WALL SECTION
1/2" = 1'-0"

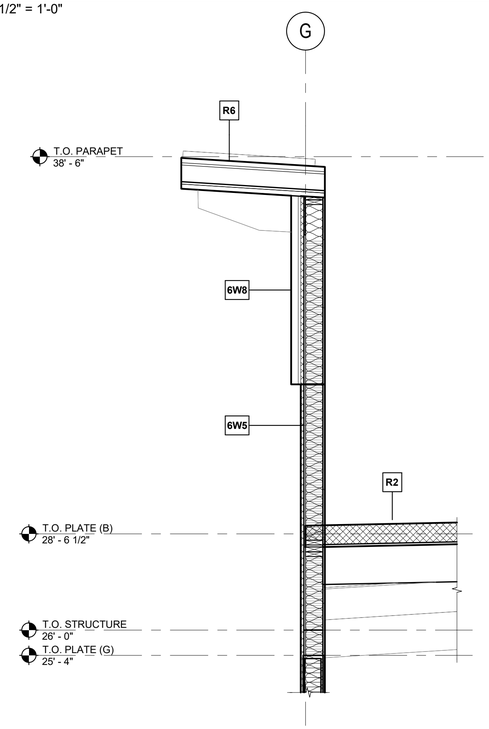

2 WALL SECTION
1/2" = 1'-0"

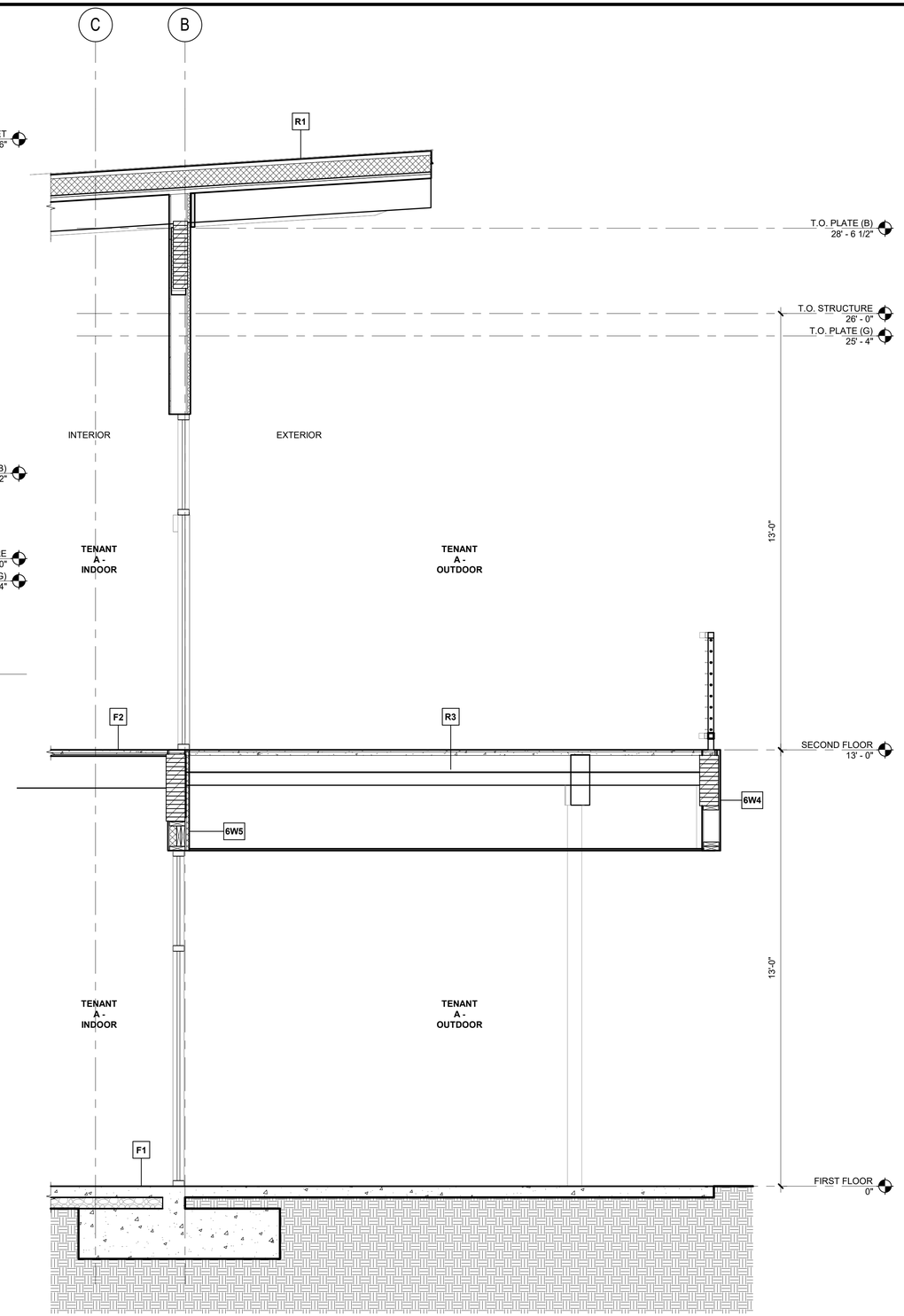

1 WALL SECTION
1/2" = 1'-0"

0 1 2 4
SCALE: 1/2" = 1'-0"

IF SHEET MEASURES LESS THAN 22"X34", IT IS A REDUCED PRINT. REDUCE SCALE ACCORDINGLY

bcra
T 253.627.4367 F 253.627.4395 WWW.BCRADESIGN.COM
2106 PACIFIC AVENUE, SUITE 300, TACOMA, WA 98402

SEAL

PROJECT
PORT OF EVERETT
WINE WALK BUILDING A12
XXXX SEINER DRIVE
EVERETT, WASHINGTON 98201

REVISIONS

DATE
12.14.2023

BCRA NO.
23045.00.00

DRAWN BY: JC

REVIEWED BY: DD

SHEET TITLE
WALL SECTIONS

bcra
© COPYRIGHT 2023 - BCRA, INC. ALL RIGHTS RESERVED

SHEET
A-313

PROGRESS SET

22x34 12/14/2023 4:16:32 PM

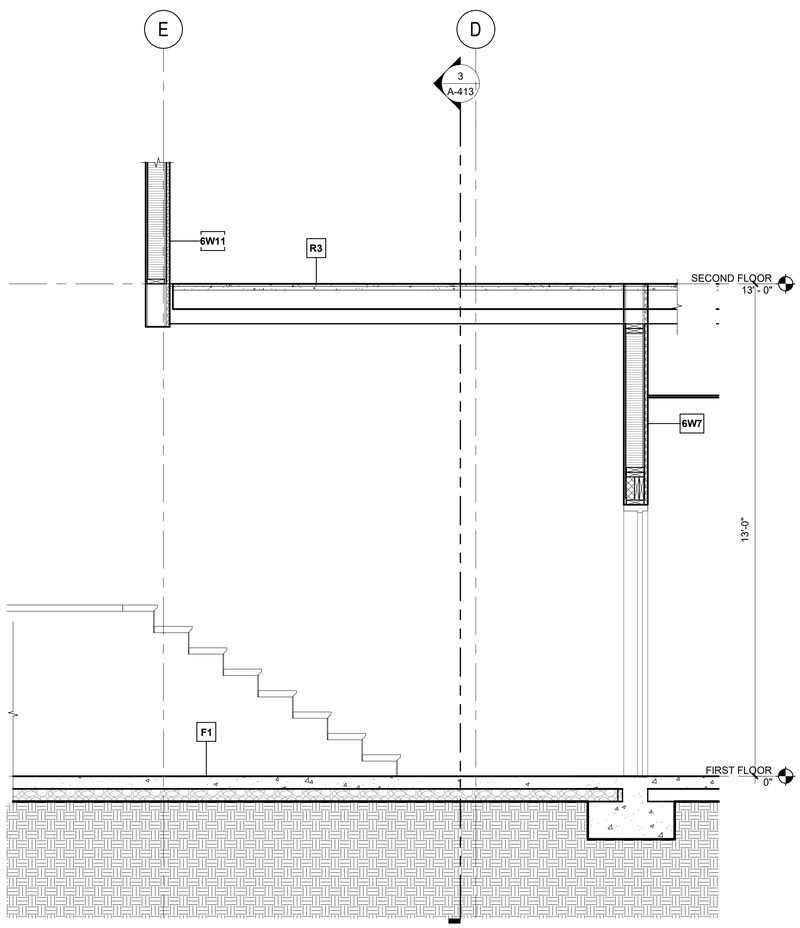

2 WALL SECTION
1/2" = 1'-0"

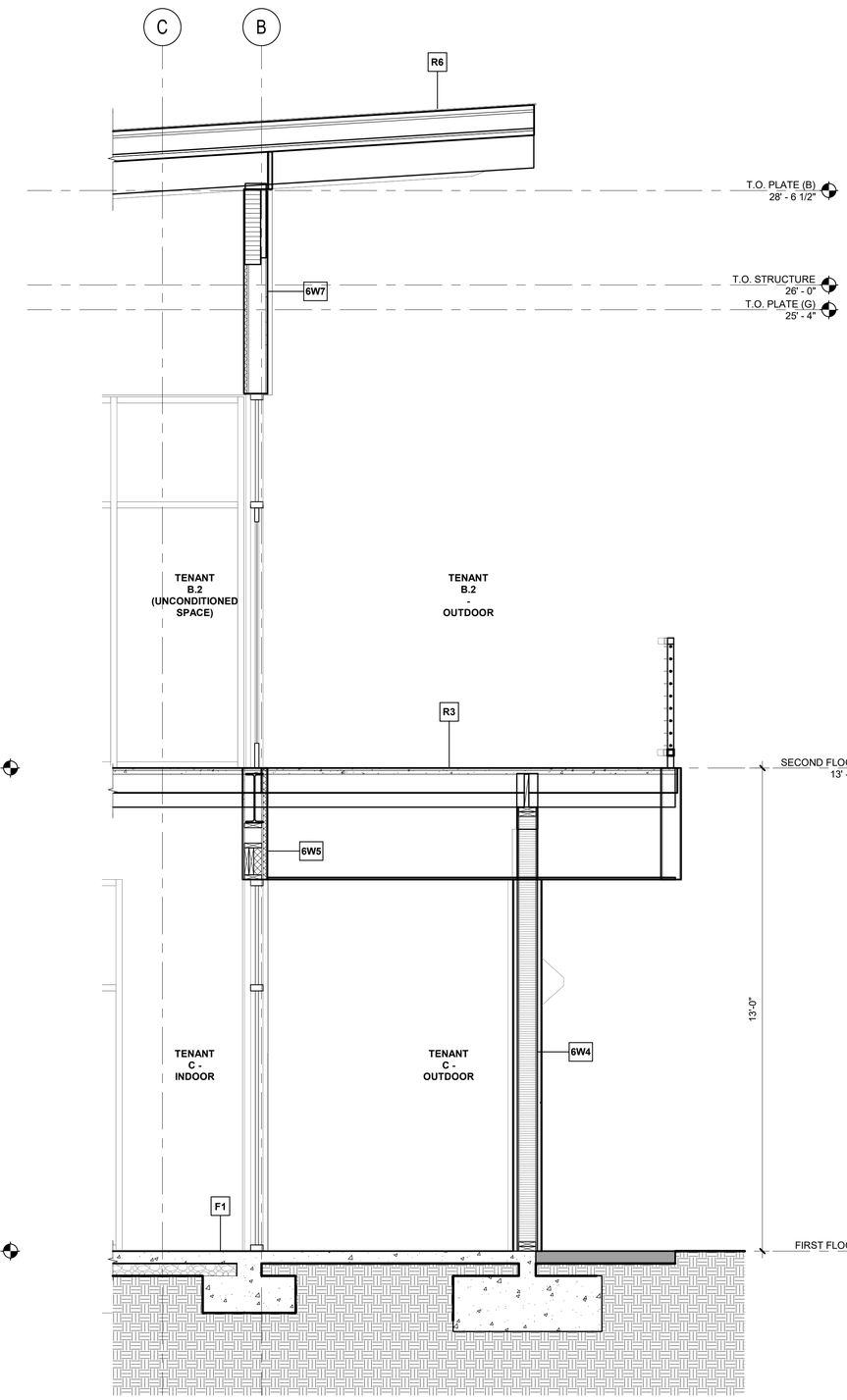

1 WALL SECTION
1/2" = 1'-0"

0 1 2 4
SCALE: 1/2" = 1'-0"

IF SHEET MEASURES LESS THAN 22"X34", IT IS A REDUCED PRINT. REDUCE SCALE ACCORDINGLY

bcra
T 253.627.4367 F 253.627.4395 WWW.BCRADESIGN.COM
2106 PACIFIC AVENUE, SUITE 300, TACOMA, WA 98402

SEAL

PROJECT
PORT OF EVERETT
WINE WALK BUILDING A12
XXXX SEINER DRIVE
EVERETT, WASHINGTON 98201

REVISIONS

DATE
12.14.2023
BCRA NO.
23045.00.00
DRAWN BY: JC
REVIEWED BY: DD
SHEET TITLE
WALL SECTIONS

bcra
© COPYRIGHT 2023 - BCRA, INC. ALL RIGHTS RESERVED
SHEET
A-314
PROGRESS SET

22x34 12/14/2023 4:16:53 PM

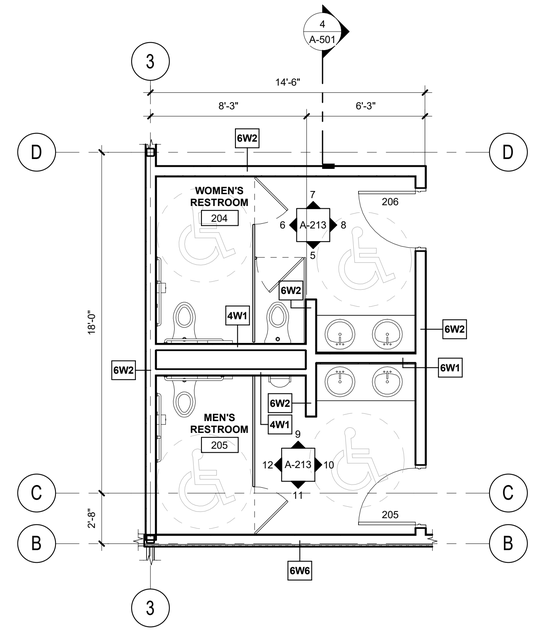

3 ENLARGED SECOND FLOOR PLAN - RESTROOMS

1/4" = 1'-0"

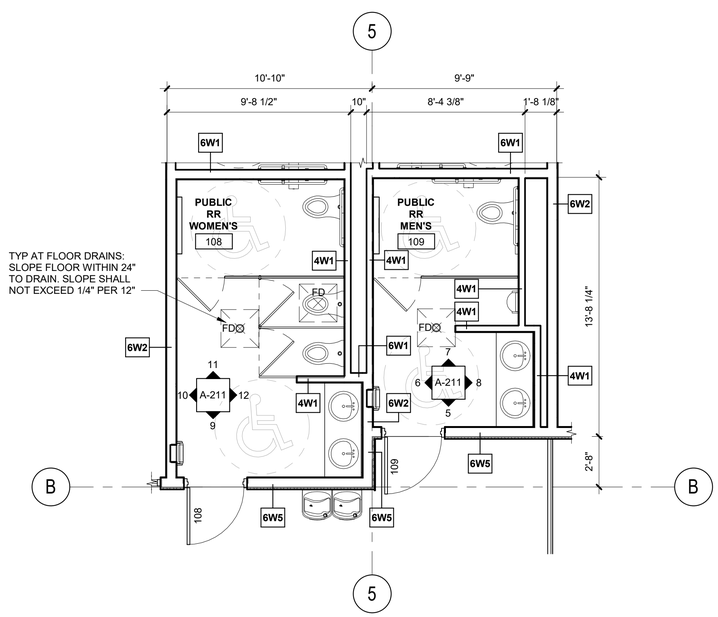

2 ENLARGED FLOOR PLAN - PUBLIC RESTROOMS

1/4" = 1'-0"

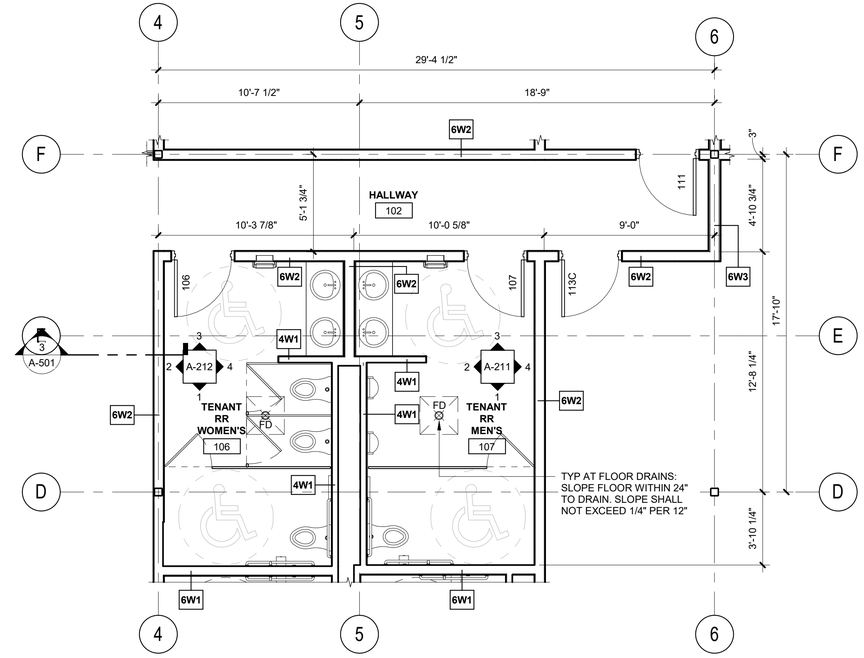

1 ENLARGED FLOOR PLAN - TENANT RESTROOMS

1/4" = 1'-0"

PLAN NORTH

0 4 8 16

SCALE: 1/8" = 1'-0"

bcra
T 253.627.4367 F 253.627.4395 WWW.BCRADESIGN.COM
2106 PACIFIC AVENUE, SUITE 300, TACOMA, WA 98402

SEAL

PROJECT
PORT OF EVERETT
WINE WALK BUILDING A12
XXXX SEINER DRIVE
EVERETT, WASHINGTON 98201

REVISIONS

DATE
12.14.2023

BCRA NO.
23045.00.00

DRAWN BY:

REVIEWED BY:

SHEET TITLE
ENLARGED FLOOR PLANS

bcra

© COPYRIGHT 2023 - BCRA, INC. ALL RIGHTS RESERVED.

SHEET
A-401

PROGRESS SET

IF SHEET MEASURES LESS THAN 22"X34", IT IS A REDUCED PRINT. REDUCE SCALE ACCORDINGLY

22x34 12/14/2023 4:18:33 PM

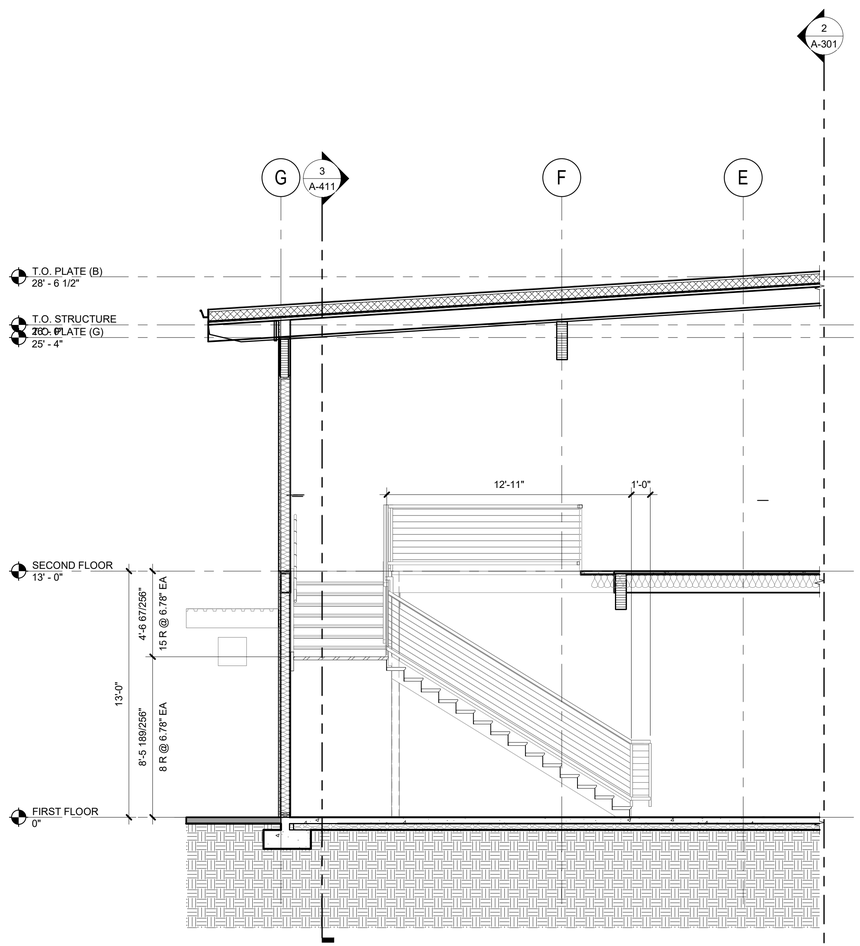

4 STAIR 1 - EAST / WEST SECTION
1/4" = 1'-0"

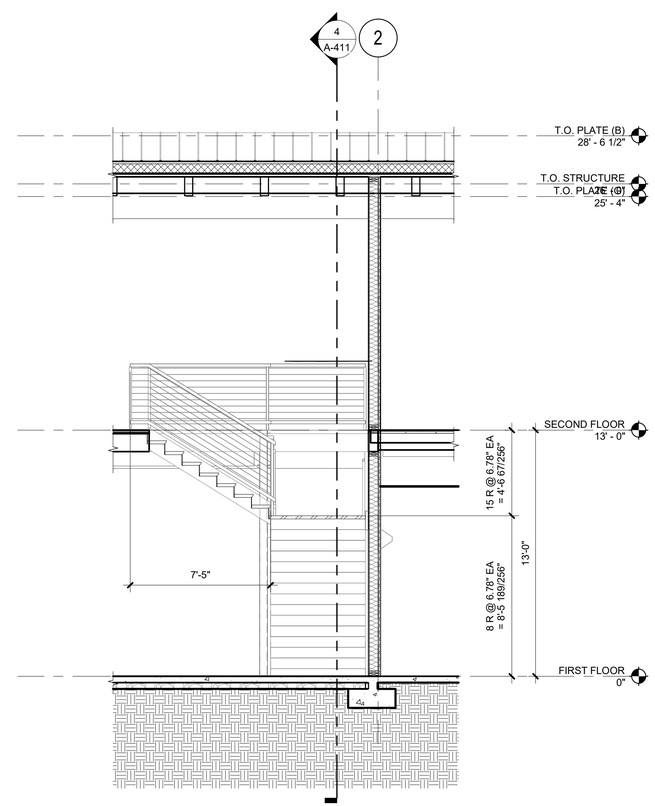

3 STAIR 1 - NORTH / SOUTH SECTION
1/4" = 1'-0"

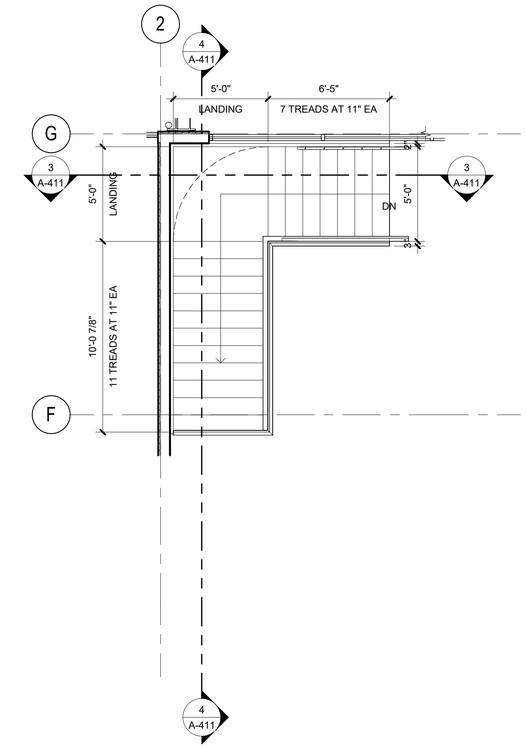

2 STAIR 1 - SECOND FLOOR PLAN
1/4" = 1'-0"

TRUE NORTH

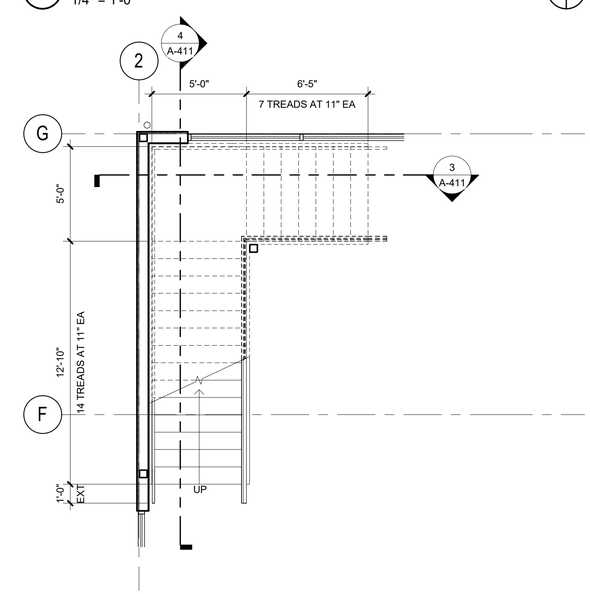

1 STAIR 1 - FIRST FLOOR PLAN
1/4" = 1'-0"

0 2 4 8
SCALE: 1/4" = 1'-0"

TRUE NORTH

bcra
T 253.627.4367 F 253.627.4395 WWW.BCRADESIGN.COM
2106 PACIFIC AVENUE, SUITE 300, TACOMA, WA 98402

SEAL

PROJECT
PORT OF EVERETT
WINE WALK BUILDING A12
XXXX SEINER DRIVE
EVERETT, WASHINGTON 98201

REVISIONS

DATE
12.14.2023

BCRA NO.
23045.00.00

DRAWN BY: JC

REVIEWED BY: DO

SHEET TITLE
STAIR PLANS AND SECTIONS

bcra

© COPYRIGHT 2023 - BCRA, INC. ALL RIGHTS RESERVED

SHEET
A-411

PROGRESS SET

IF SHEET MEASURES LESS THAN 22"X34", IT IS A REDUCED PRINT. REDUCE SCALE ACCORDINGLY

22x34 12/14/2023 4:16:34 PM

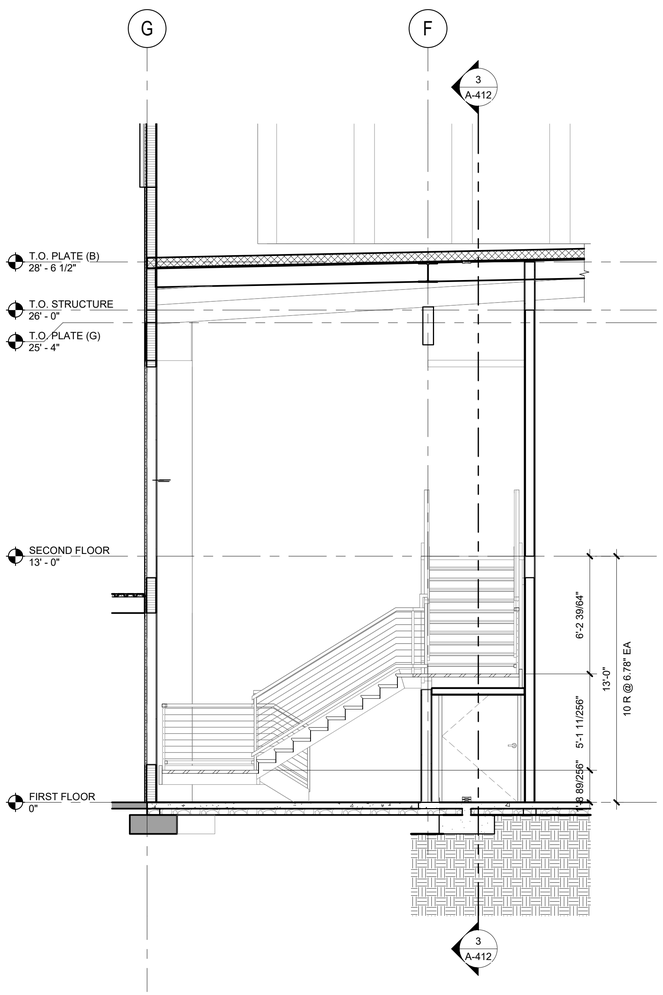

4 STAIR 2 - EAST / WEST SECTION
1/4" = 1'-0"

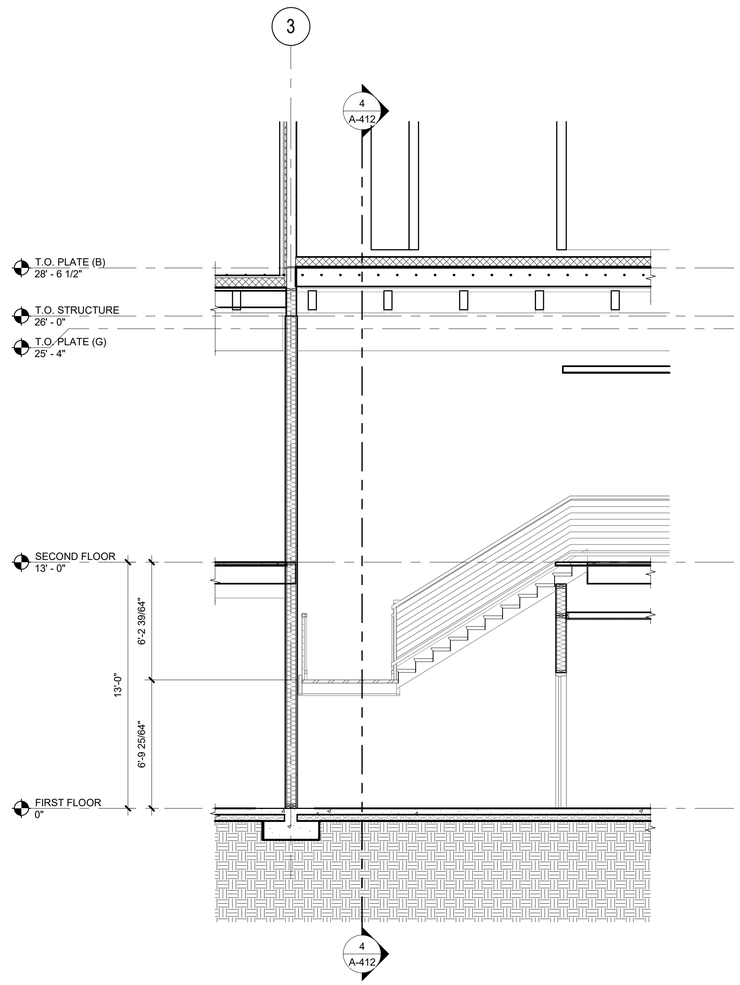

3 STAIR 2 - NORTH / SOUTH SECTION
1/4" = 1'-0"

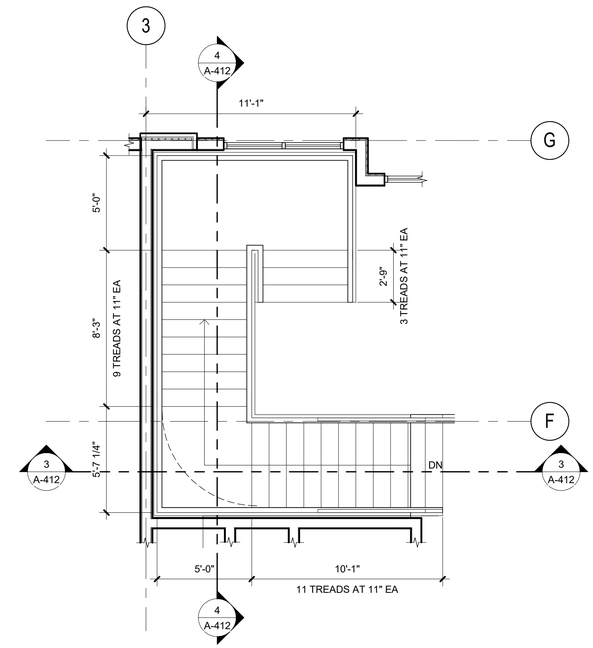

2 STAIR 2 - SECOND FLOOR PLAN
1/4" = 1'-0"

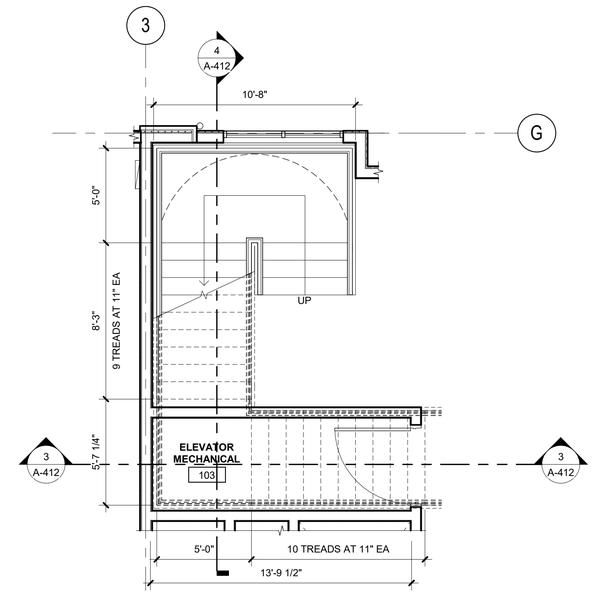

1 STAIR 2 - FIRST FLOOR PLAN
1/4" = 1'-0"

TRUE NORTH

0 2 4 8
SCALE: 1/4" = 1'-0"

bcra
T 253.627.4367 F 253.627.4395 WWW.BCRADESIGN.COM
2106 PACIFIC AVENUE, SUITE 300, TACOMA, WA 98402

SEAL

PROJECT
PORT OF EVERETT
WINE WALK BUILDING A12
XXXX SEINER DRIVE
EVERETT, WASHINGTON 98201

REVISIONS

DATE
12.14.2023
BCRA NO.
23045.00.00
DRAWN BY: JC
REVIEWED BY: DD
SHEET TITLE
STAIR PLANS AND SECTIONS

bcra
© COPYRIGHT 2023 - BCRA, INC. ALL RIGHTS RESERVED
SHEET
A-412
PROGRESS SET

IF SHEET MEASURES LESS THAN 22"X34", IT IS A REDUCED PRINT. REDUCE SCALE ACCORDINGLY

22x34 12/14/2023 4:16:34 PM

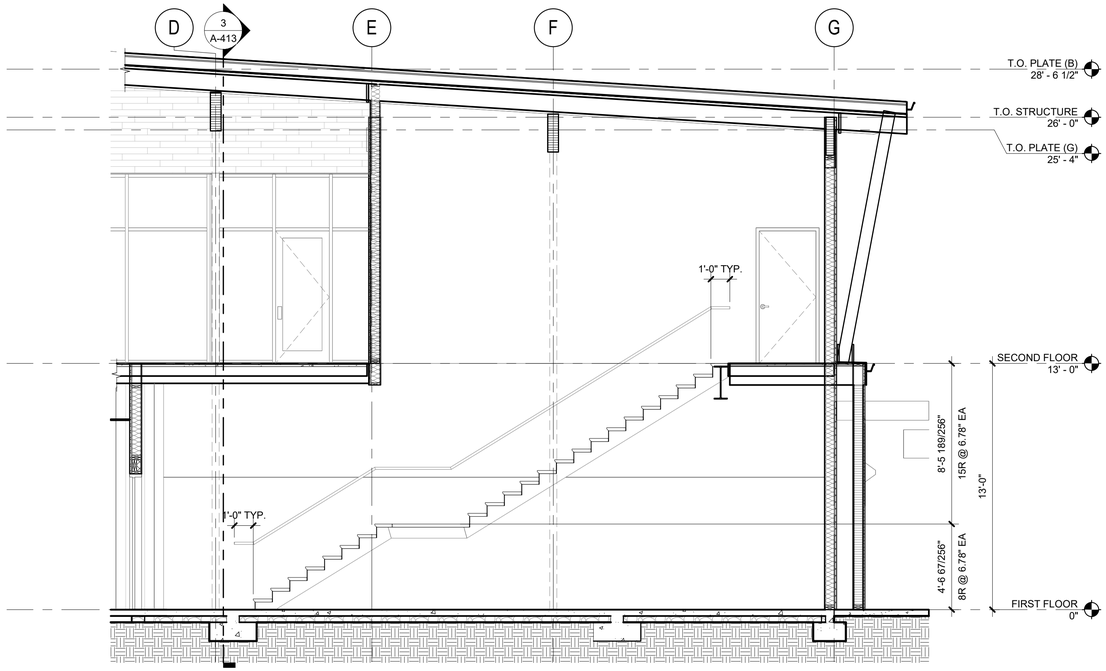

4 STAIR 3 - EAST / WEST SECTION
1/4" = 1'-0"

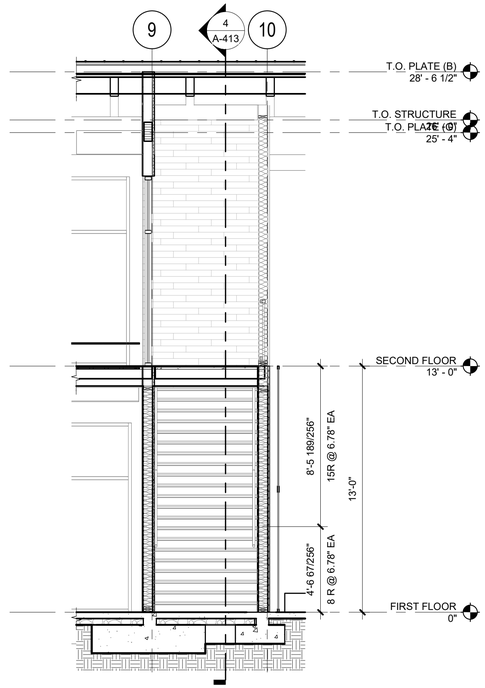

3 STAIR 3 - NORTH / SOUTH SECTION
1/4" = 1'-0"

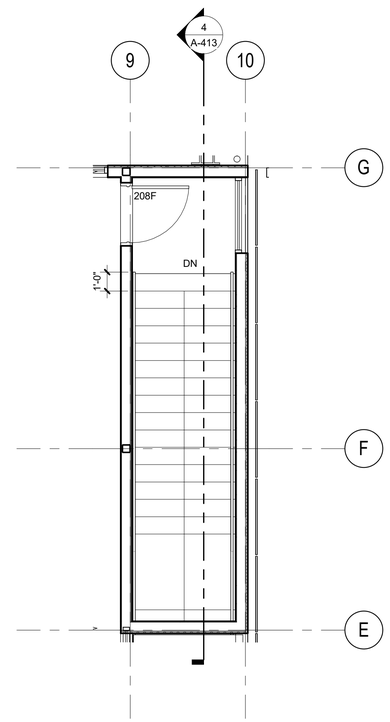

2 STAIR 3 - SECOND FLOOR PLAN
1/4" = 1'-0"

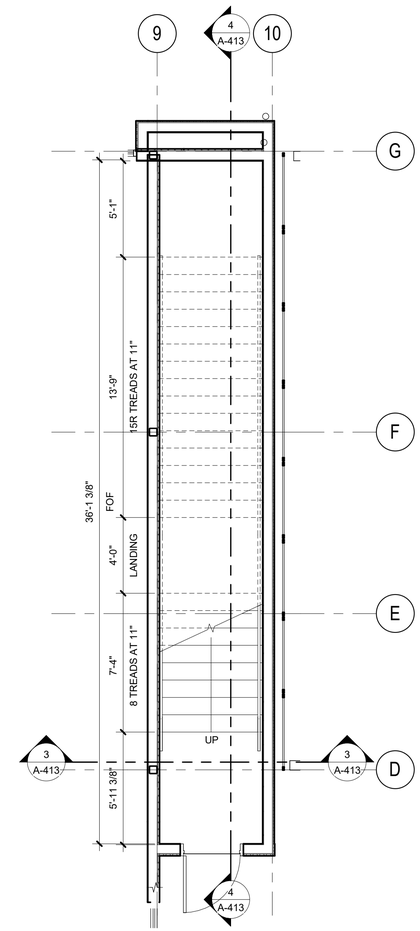

1 STAIR 3 - FIRST FLOOR PLAN
1/4" = 1'-0"

TRUE NORTH

0 2 4 8
SCALE: 1/4" = 1'-0"

TRUE NORTH

IF SHEET MEASURES LESS THAN 22"X34", IT IS A REDUCED PRINT. REDUCE SCALE ACCORDINGLY

22x34 12/14/2023 4:16:35 PM

bcra
T 253.627.4367 F 253.627.4395 WWW.BCRADESIGN.COM
2106 PACIFIC AVENUE, SUITE 300, TACOMA, WA 98402

SEAL

PROJECT
PORT OF EVERETT
WINE WALK BUILDING A12
XXXX SEINER DRIVE
EVERETT, WASHINGTON 98201

REVISIONS

DATE
12.14.2023

BCRA NO.
23045.00.00

DRAWN BY: JC

REVIEWED BY: DD

SHEET TITLE
STAIR PLANS AND SECTIONS

bcra

© COPYRIGHT 2023 - BCRA, INC. ALL RIGHTS RESERVED

SHEET
A-413

PROGRESS SET

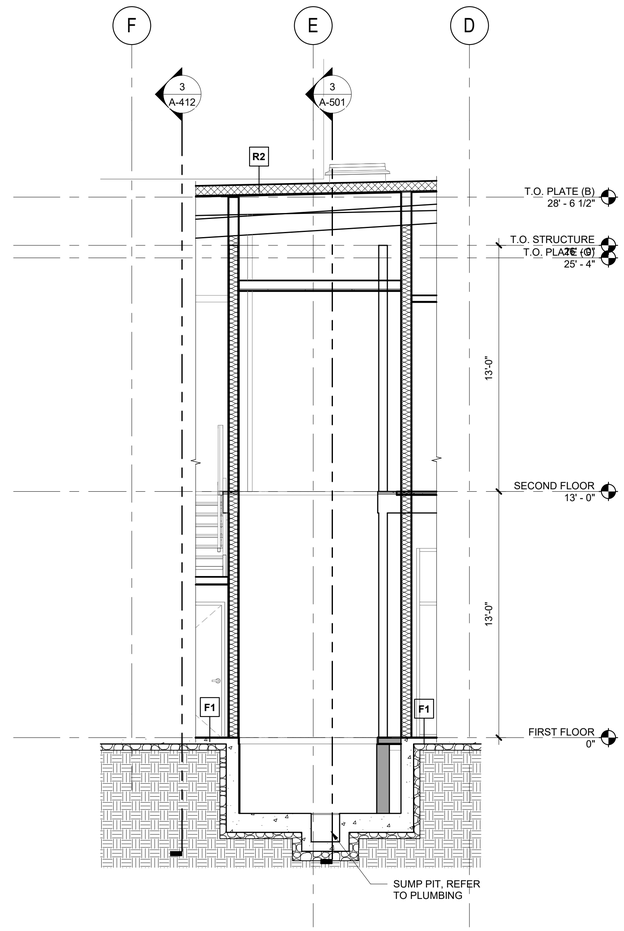

4 ELEVATOR EW SECTION
1/4" = 1'-0"

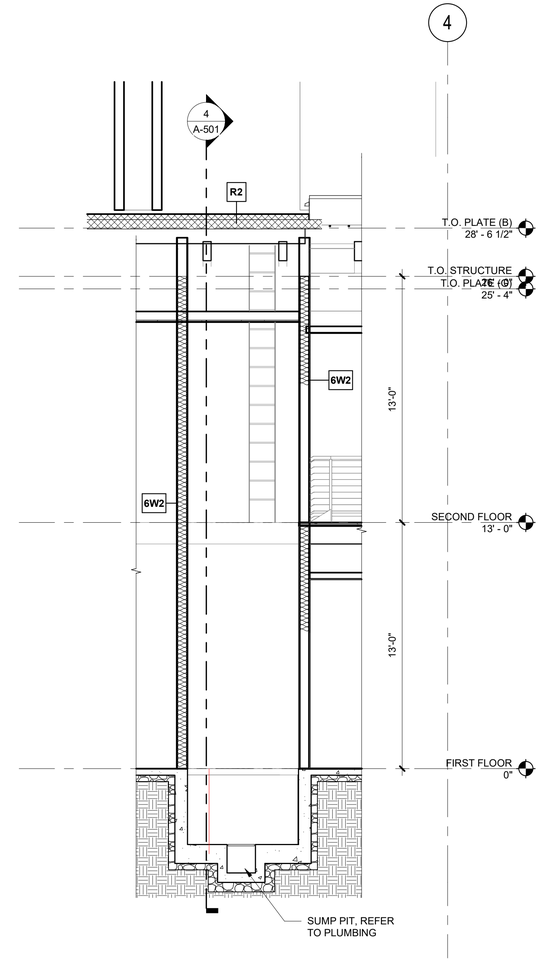

3 ELEVATOR NS SECTION
1/4" = 1'-0"

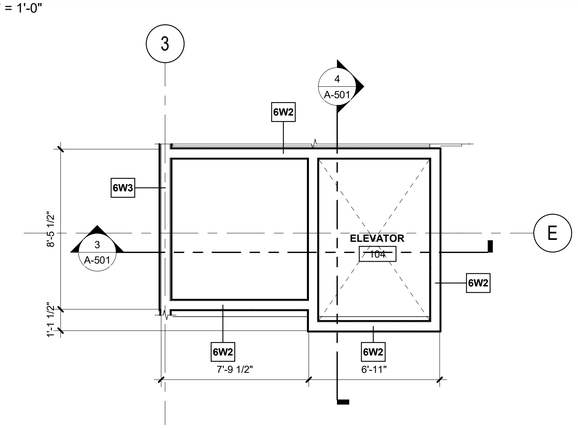

2 ELEVATOR - SECOND FLOOR PLAN
1/4" = 1'-0"

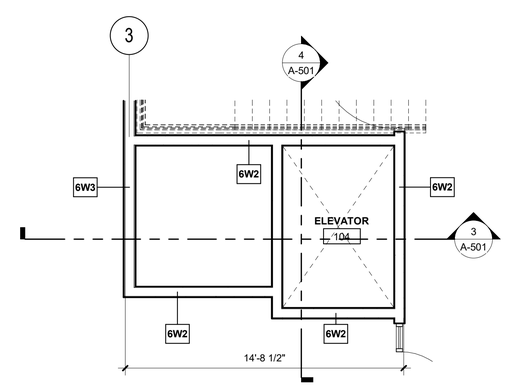

1 ELEVATOR - FIRST FLOOR PLAN
1/4" = 1'-0"

0 2 4 8
SCALE: 1/4" = 1'-0"
TRUE NORTH

IF SHEET MEASURES LESS THAN 22"X34", IT IS A REDUCED PRINT. REDUCE SCALE ACCORDINGLY

22x34 12/14/2023 4:16:36 PM

bcra
T 253.627.4367 F 253.627.4395 WWW.BCRADESIGN.COM
2106 PACIFIC AVENUE, SUITE 300, TACOMA, WA 98402

SEAL

PROJECT
PORT OF EVERETT
WINE WALK BUILDING A12
XXXX SEINER DRIVE
EVERETT, WASHINGTON 98201

REVISIONS

DATE
12.14.2023
BCRA NO.
23045.00.00
DRAWN BY: Author
REVIEWED BY:
SHEET TITLE
ELEVATOR PLANS AND SECTIONS

bcra
© COPYRIGHT 2023 - BCRA, INC. ALL RIGHTS RESERVED

SHEET
A-501

PROGRESS SET

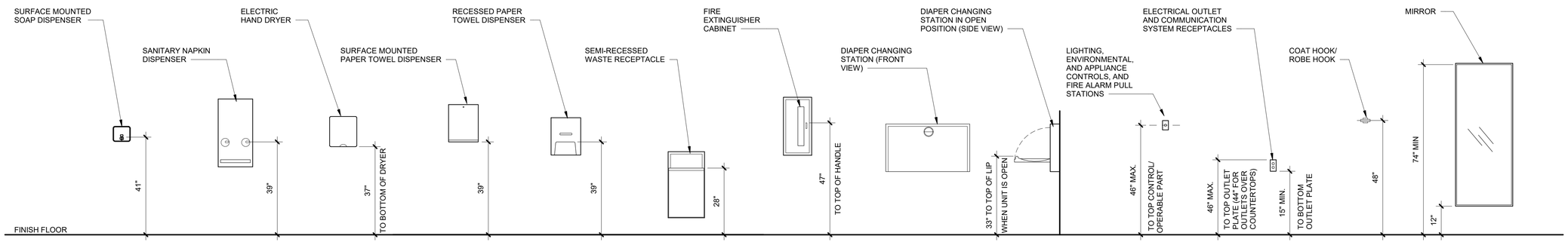

5 MOUNTING HEIGHTS AND LOCATIONS
1/2" = 1'-0"

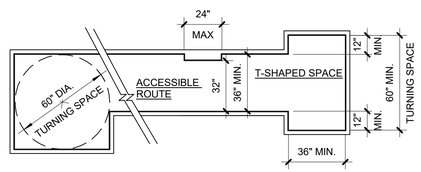

ALL FINISHES MUST BE INCLUDED IN CALCULATION OF MINIMUM CLEARANCES. MEASURE FROM NEAREST FINISH SURFACE TO NEAREST FINISH SURFACE, I.E. BASEBOARD TO BASEBOARD.

ACCESSIBLE ROUTES OF TRAVEL MUST BE FREE OF OBSTRUCTIONS AND MAY BE REDUCED TO 32" MIN. FOR A MAXIMUM DISTANCE OF 24".

THE RUNNING SLOPE OF THE WALKING SURFACE SHALL NOT BE STEEPER THAN 1:20. THE CROSS SLOPE OF A WALKING SURFACE SHALL NOT BE STEEPER THAN 1:48.

A WHEELCHAIR TURNING SPACE MUST BE PROVIDED CONSISTING OF EITHER A 60" DIAMETER CIRCLE OR A "T" SHAPED INTERSECTION WITHIN A 60" MIN. SQUARE WITH ARMS AND BASE 36" WIDE MIN. EACH ARM OF THE "T" SHALL BE CLEAR OF OBSTRUCTIONS 12" MIN. IN EACH DIRECTION AND THE BASE SHALL BE CLEAR OF OBSTRUCTIONS 24" MIN. KNEE AND TOE CLEARANCES ALLOWED ONLY AT THE END OF EITHER THE BASE OR ARM.

4 ACCESSIBLE ROUTE
1/4" = 1'-0"

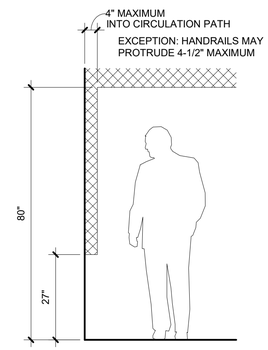

3 LIMITS OF PROTRUDING OBJECTS
1/2" = 1'-0"

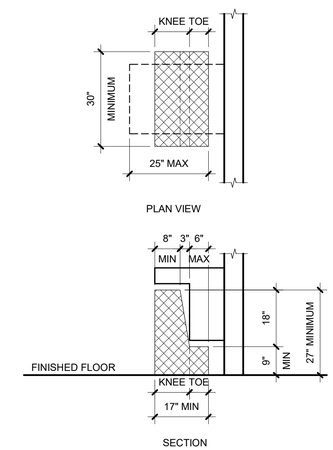

2 KNEE AND TOE CLEARANCE
1/2" = 1'-0"

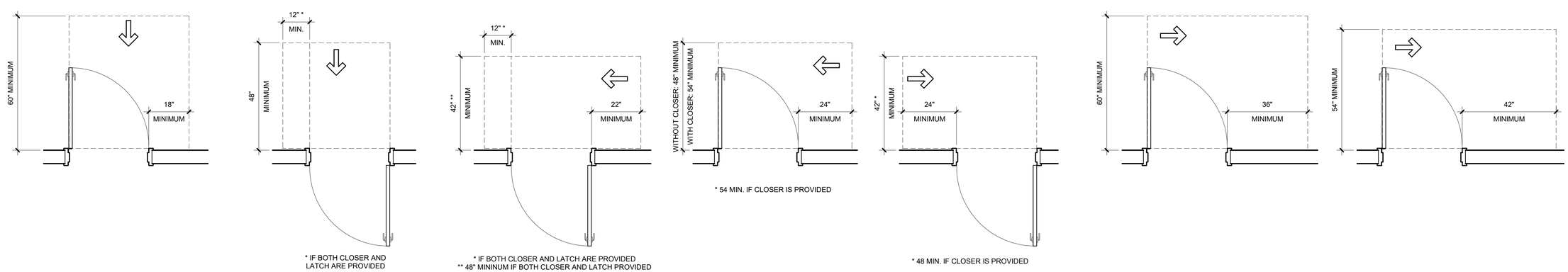

* IF BOTH CLOSER AND LATCH ARE PROVIDED

* IF BOTH CLOSER AND LATCH ARE PROVIDED
** 48" MININUM IF BOTH CLOSER AND LATCH PROVIDED

* 54 MIN. IF CLOSER IS PROVIDED

* 48 MIN. IF CLOSER IS PROVIDED

ACCESSIBLE ROUTES
FRONT APPROACH, PULL-SIDE

ACCESSIBLE ROUTES
FRONT APPROACH, PUSH-SIDE

ACCESSIBLE ROUTES
HINGE APPROACH, PUSH-SIDE

ACCESSIBLE ROUTES
LATCH APPROACH, PULL-SIDE

ACCESSIBLE ROUTES
LATCH APPROACH, PUSH-SIDE

ACCESSIBLE ROUTES
HINGE APPROACH, PULL-SIDE

ACCESSIBLE ROUTES
HINGE APPROACH, PULL-SIDE

1 TYPICAL DOOR MANEUVERING CLEARANCES
1/2" = 1'-0"

bcra
T 253.627.4367 F 253.627.4395 WWW.BCRADESIGN.COM
2106 PACIFIC AVENUE, SUITE 300, TACOMA, WA 98402

SEAL

PROJECT
PORT OF EVERETT
WINE WALK BUILDING A12
XXXX SEINER DRIVE
EVERETT, WASHINGTON 98201

REVISIONS

DATE
12.14.2023
BCRA NO.
23045.00.00
DRAWN BY: Author
REVIEWED BY:
SHEET TITLE
ADA DETAILS - TYPICAL CLEARANCES AND MOUNTING HEIGHTS

bcra
© COPYRIGHT 2020 - BCRA, INC. ALL RIGHTS RESERVED.
SHEET
A-501a
PROGRESS SET

22x34 12/14/2023 4:16:36 PM

IF SHEET MEASURES LESS THAN 22"X34", IT IS A REDUCED PRINT. REDUCE SCALE ACCORDINGLY

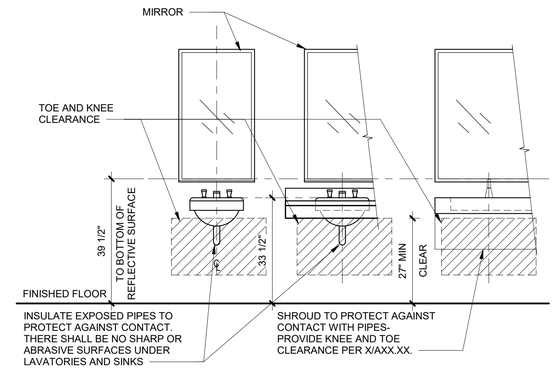

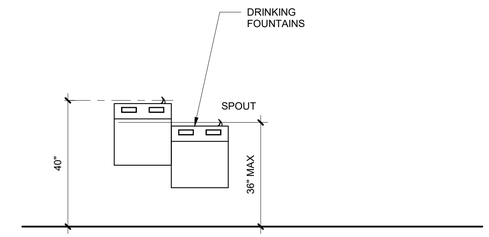

5 MOUNTING HEIGHTS AND LOCATIONS
1/2" = 1'-0"

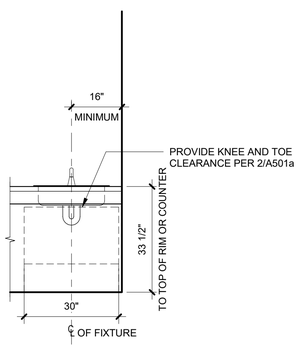

4 COUNTER-MOUNTED SINK - ACCESSIBLE
1/2" = 1'-0"

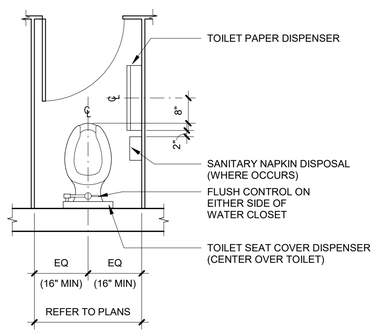

PLAN VIEW

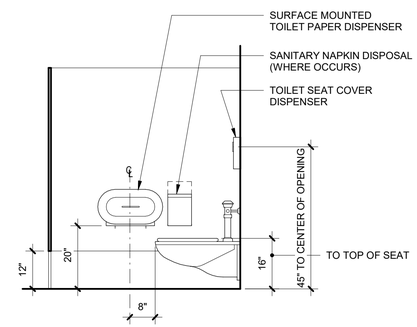

SIDE WALL - ELEVATION VIEW

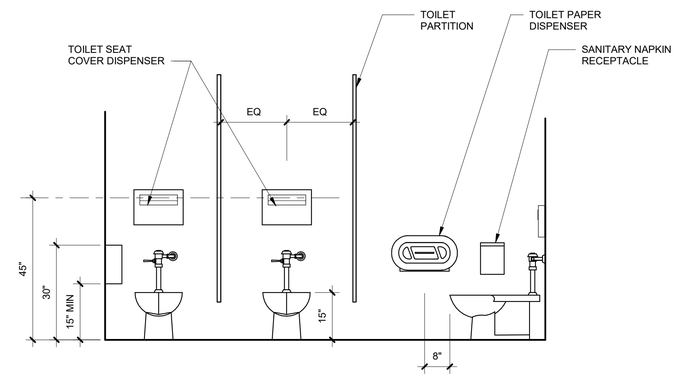

NOTE: DIMENSIONS ARE FROM FINISHED FACE OF WALL / PARTITION

2 TOILET STALL - ADULT STANDARD (NON-ACCESSIBLE)
1/2" = 1'-0"

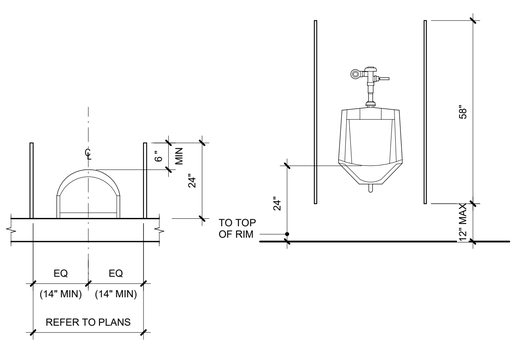

PLAN VIEW

BACK WALL - ELEVATION VIEW

NOTE: DIMENSIONS ARE FROM FINISHED FACE OF WALL / PARTITION

3 URINAL STALL - STANDARD (NON-ACCESSIBLE)
1/2" = 1'-0"

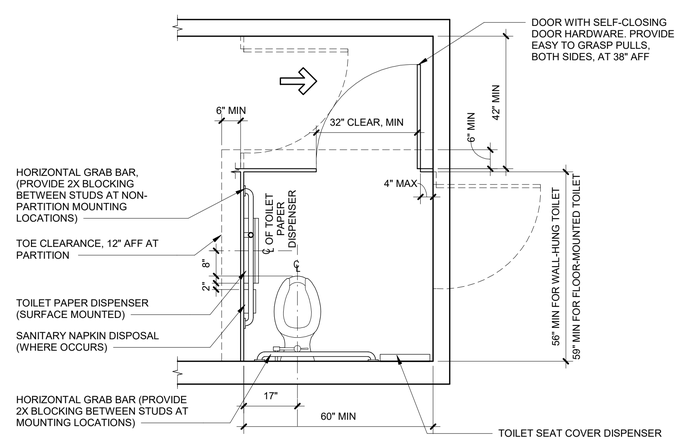

PLAN VIEW

NOTE: DIMENSIONS ARE FROM FINISHED FACE OF WALL / PARTITION

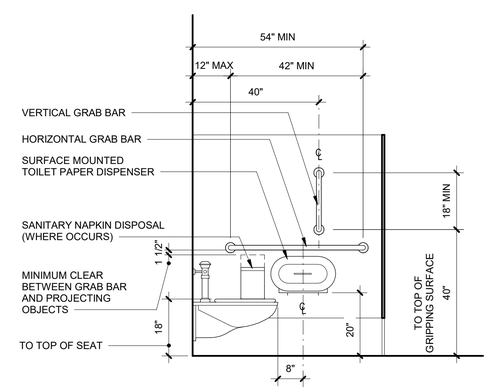

SIDE WALL - ELEVATION VIEW

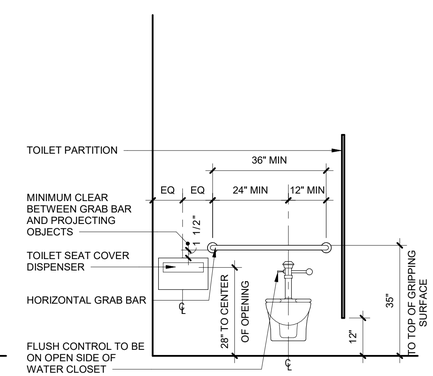

BACK WALL - ELEVATION VIEW

1 TOILET STALL - ADULT ACCESSIBLE
1/2" = 1'-0"

22x34 12/14/2023 4:16:37 PM

bcra
T 253.627.4367 F 253.627.4395 WWW.BCRADESIGN.COM
2106 PACIFIC AVENUE, SUITE 300, TACOMA, WA 98402

SEAL

PROJECT
PORT OF EVERETT
WINE WALK BUILDING A12
XXXX SEINER DRIVE
EVERETT, WASHINGTON 98201

REVISIONS

DATE
12.14.2023
BCRA NO.
23045.00.00
DRAWN BY: Author
REVIEWED BY:
SHEET TITLE
ADA DETAILS - PLUMBING FIXTURES

bcra

© COPYRIGHT 2020 - BCRA, INC. ALL RIGHTS RESERVED

SHEET
A-501b
PROGRESS SET

IF SHEET MEASURES LESS THAN 22"X34", IT IS A REDUCED PRINT. REDUCE SCALE ACCORDINGLY

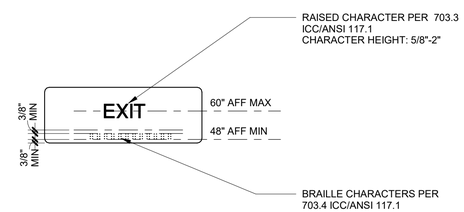

4 TYPICAL FLOOR LEVEL SIGN
1 1/2" = 1'-0"

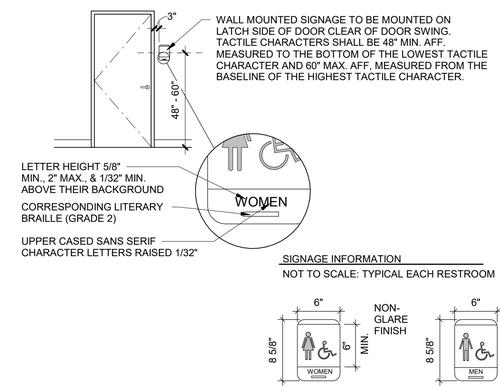

2 PUBLIC RESTROOM SIGNAGE
1/4" = 1'-0"

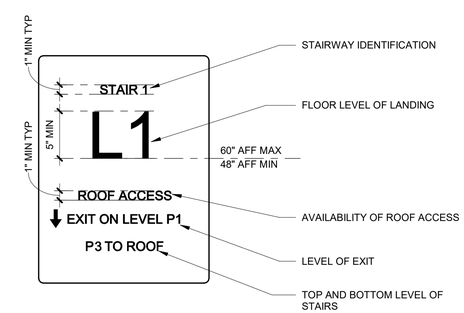

3 TYPICAL STAIRWAY ID SIGNAGE
1 1/2" = 1'-0"

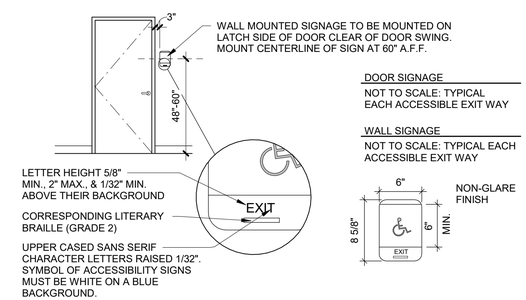

1 ACCESSIBLE EXIT SIGNAGE
1/4" = 1'-0"

IF SHEET MEASURES LESS THAN 22"X34", IT IS A REDUCED PRINT. REDUCE SCALE ACCORDINGLY

22x34 12/14/2023 4:16:38 PM

bcra
T 253.627.4367 F 253.627.4395 WWW.BCRADESIGN.COM
2106 PACIFIC AVENUE, SUITE 300, TACOMA, WA 98402

SEAL

PROJECT
PORT OF EVERETT
WINE WALK BUILDING A12
XXXX SEINER DRIVE
EVERETT, WASHINGTON 98201

REVISIONS

DATE
12.14.2023
BCRA NO.
23045.00.00
DRAWN BY: Author
REVIEWED BY:
SHEET TITLE
ADA DETAILS - SIGNAGE

bcra
© COPYRIGHT 2020 - BCRA, INC. ALL RIGHTS RESERVED

SHEET
A-501c
PROGRESS SET

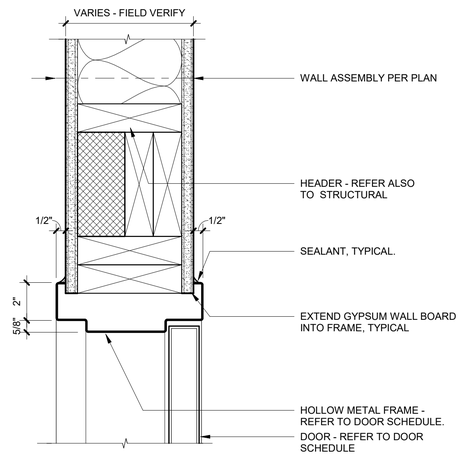

6 TYPICAL HOLLOW METAL DOOR HEAD
3" = 1'-0"

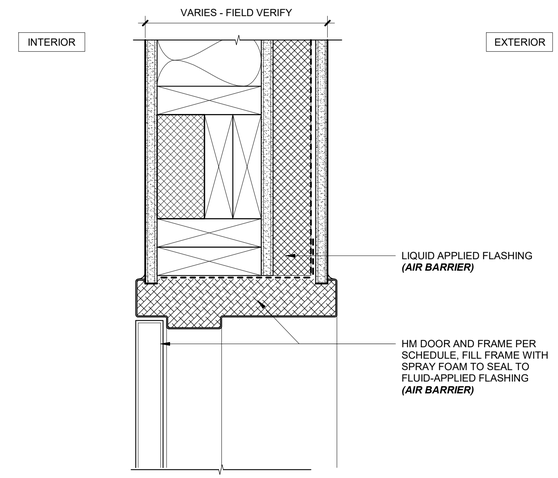

4 DOOR HEAD
3" = 1'-0"

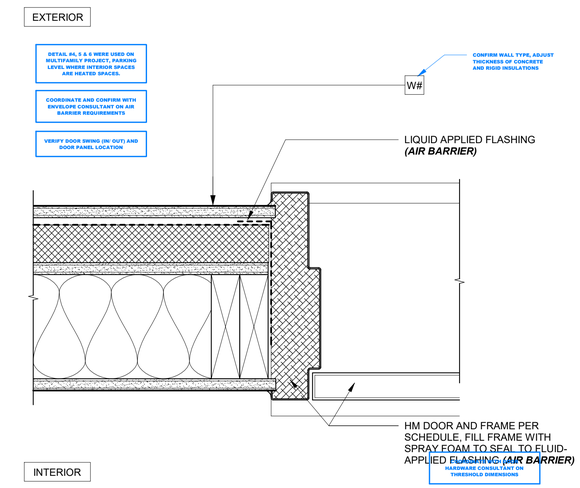

3 DOOR JAMB
3" = 1'-0"

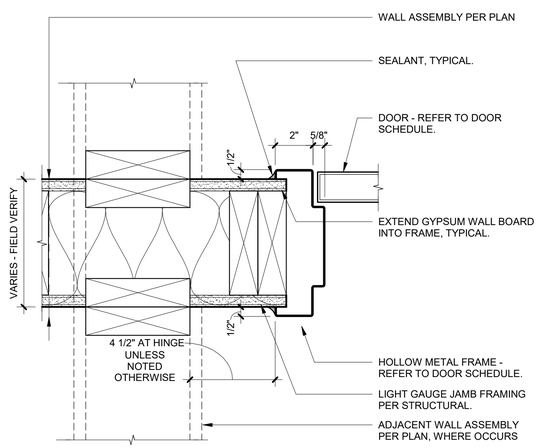

5 TYPICAL HOLLOW METAL DOOR JAMB
3" = 1'-0"

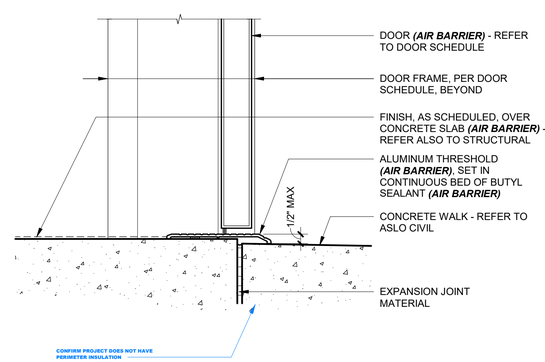

2 EXTERIOR DOOR THRESHOLD
3" = 1'-0"

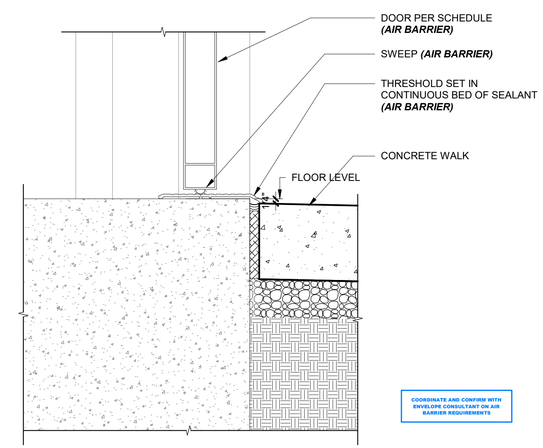

1 DOOR THRESHOLD AT STOREFRONT
3" = 1'-0"

bcra
T 253.627.4367 F 253.627.4395 WWW.BCRADESIGN.COM
2106 PACIFIC AVENUE, SUITE 300, TACOMA, WA 98402

SEAL

PROJECT
PORT OF EVERETT
WINE WALK BUILDING A12
XXXX SEINER DRIVE
EVERETT, WASHINGTON 98201

REVISIONS

DATE
12.14.2023
BCRA NO.
23045.00.00
DRAWN BY: Author
REVIEWED BY:
SHEET TITLE
DOOR DETAILS

bcra
© COPYRIGHT 2023 - BCRA, INC. ALL RIGHTS RESERVED.

SHEET
A-543

PROGRESS SET

22x34 12/14/2023 4:16:39 PM

IF SHEET MEASURES LESS THAN 22"X34", IT IS A REDUCED PRINT. REDUCE SCALE ACCORDINGLY

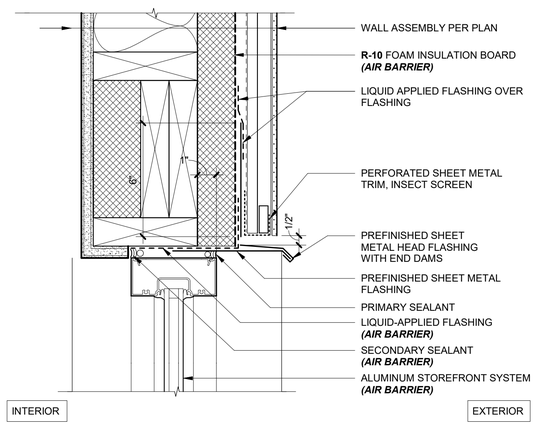

3 STOREFRONT HEAD AT WOOD PLANK SIDING

3" = 1'-0"

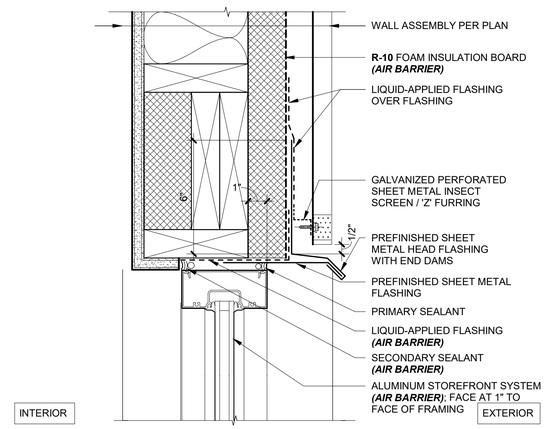

4 STOREFRONT HEAD AT METAL SIDING

3" = 1'-0"

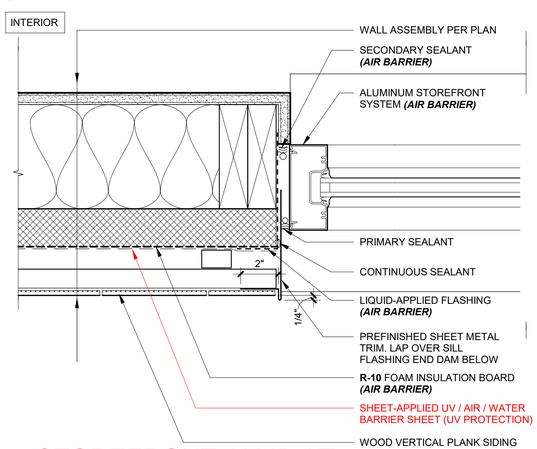

2 STOREFRONT JAMB AT WOOD PLANK SIDING

3" = 1'-0"

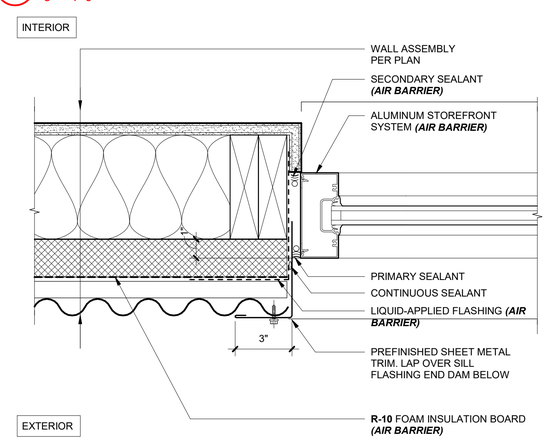

5 STOREFRONT JAMB AT METAL SIDING

3" = 1'-0"

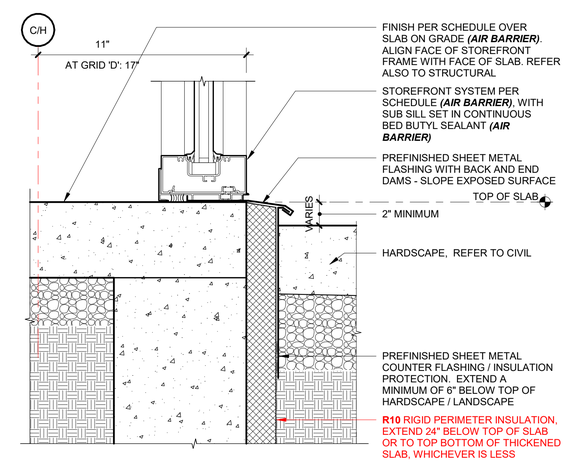

1 STOREFRONT SILL AT SLAB

3" = 1'-0"

bcra
T 253.627.4367 F 253.627.4395 WWW.BCRADESIGN.COM
2106 PACIFIC AVENUE, SUITE 300, TACOMA, WA 98402

SEAL

PROJECT
PORT OF EVERETT
WINE WALK BUILDING A12
XXXX SEINER DRIVE
EVERETT, WASHINGTON 98201

REVISIONS

DATE
12.14.2023

BCRA NO.
23045.00.00

DRAWN BY: Author

REVIEWED BY:

SHEET TITLE
STOREFRONT DETAILS

bcra

© COPYRIGHT 2023 - BCRA, INC. ALL RIGHTS RESERVED.

SHEET
A-544

PROGRESS SET

22x34 12/14/2023 4:16:40 PM

IF SHEET MEASURES LESS THAN 22"X34", IT IS A REDUCED PRINT. REDUCE SCALE ACCORDINGLY

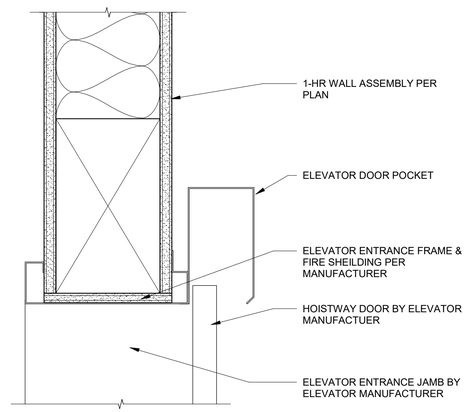

3 ELEVATOR DOOR HEAD
3" = 1'-0"

NOTE:

ELEVATOR ENTRANCE FRAMING, FIRE SHIELDING AND JAMB ANCHOR CLIPS PER ELEVATOR MANUFACTURER

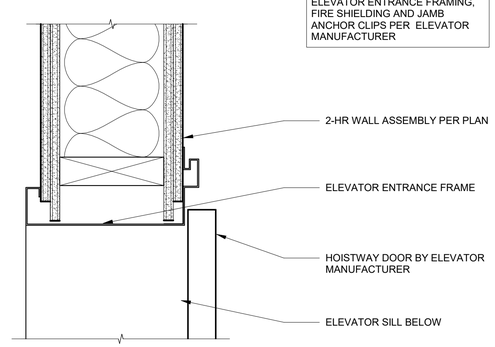

4 ELEVATOR DOOR JAMB
3" = 1'-0"

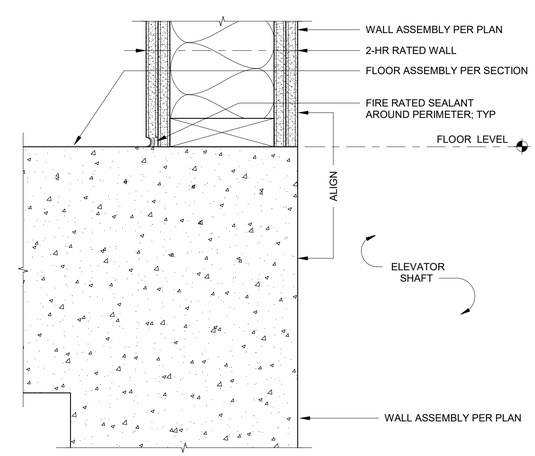

2 ELEVATOR PIT TO WALL
3" = 1'-0"

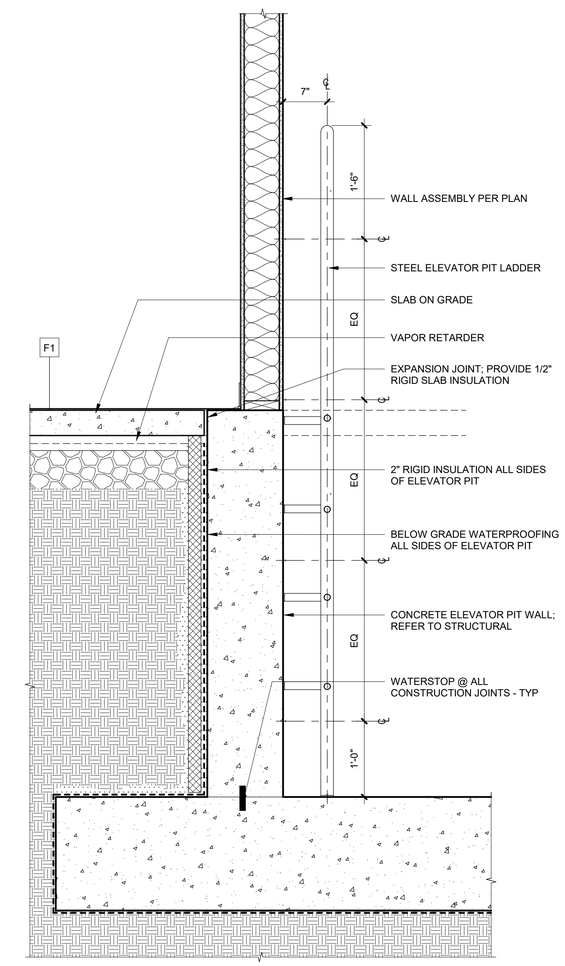

1 ELEVATOR PIT LADDER
1" = 1'-0"

bcra
T 253.627.4367 F 253.627.4395 WWW.BCRADESIGN.COM
2106 PACIFIC AVENUE, SUITE 300, TACOMA, WA 98402

SEAL

PROJECT
PORT OF EVERETT
WINE WALK BUILDING A12
XXXX SEINER DRIVE
EVERETT, WASHINGTON 98201

REVISIONS

DATE
12.14.2023

BCRA NO.
23045.00.00

DRAWN BY: Author

REVIEWED BY:

SHEET TITLE
ELEVATOR DETAILS

bcra

© COPYRIGHT 2023 - BCRA, INC. ALL RIGHTS RESERVED

SHEET
A-545

PROGRESS SET

IF SHEET MEASURES LESS THAN 22"X34", IT IS A REDUCED PRINT. REDUCE SCALE ACCORDINGLY

22x34 12/14/2023 4:16:40 PM

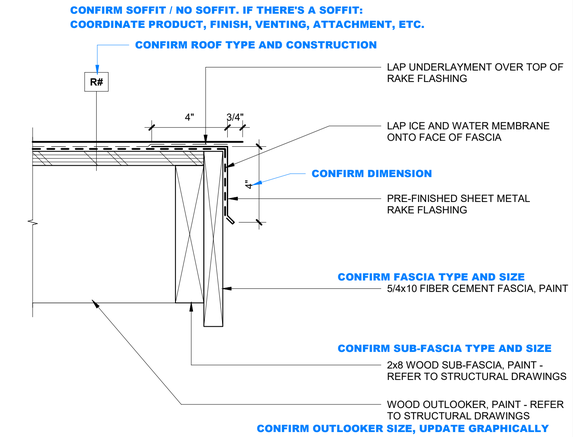

3 TYPICAL RAKE DETAIL
3" = 1'-0"

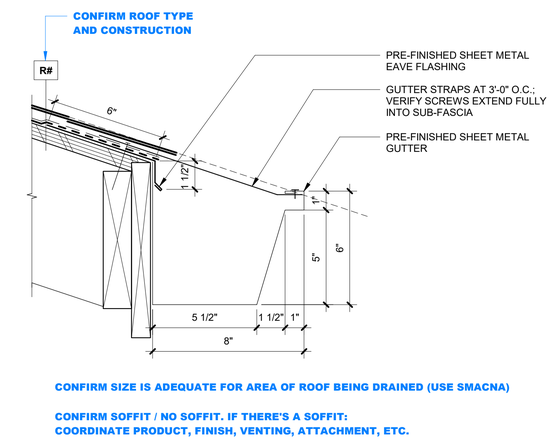

2 TYPICAL GUTTER PROFILE
3" = 1'-0"

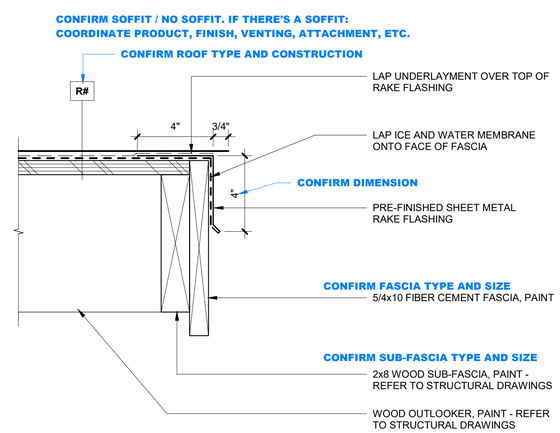

4 TYPICAL PIPE PENETRATION
3" = 1'-0"

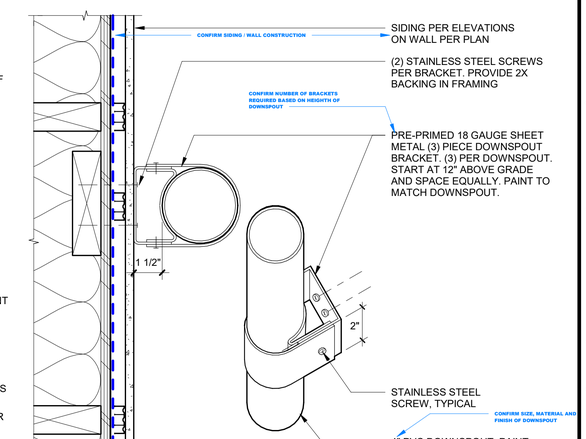

1 TYPICAL DOWNSPOUT BRACKET
3" = 1'-0"

IF SHEET MEASURES LESS THAN 22"X34", IT IS A REDUCED PRINT. REDUCE SCALE ACCORDINGLY

22x34 12/14/2023 4:16:41 PM

bcra
T 253.627.4367 F 253.627.4395 WWW.BCRADESIGN.COM
2106 PACIFIC AVENUE, SUITE 300, TACOMA, WA 98402

SEAL

PROJECT
PORT OF EVERETT
WINE WALK BUILDING A12
XXXX SEINER DRIVE
EVERETT, WASHINGTON 98201

REVISIONS

DATE
12.14.2023
BCRA NO.
23045.00.00
DRAWN BY:
REVIEWED BY:
SHEET TITLE
ROOF DETAILS

bcra
© COPYRIGHT 2023 - BCRA, INC. ALL RIGHTS RESERVED

SHEET
A-561

PROGRESS SET

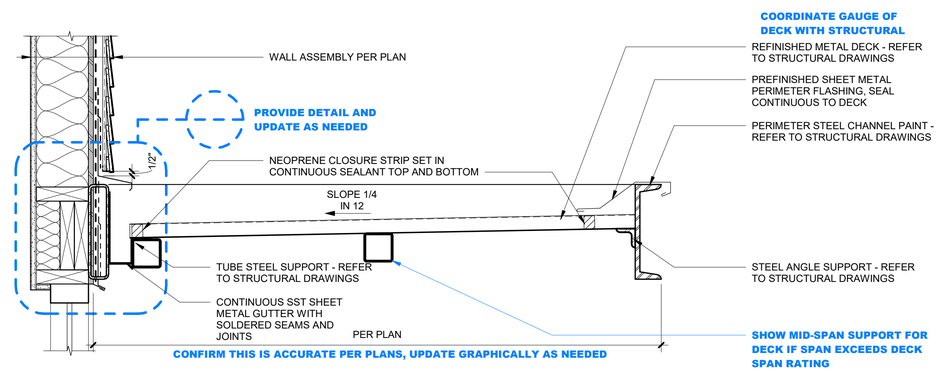

1 CANOPY SECTION

1 1/2" = 1'-0"

IF SHEET MEASURES LESS THAN 22"X34", IT IS A REDUCED PRINT. REDUCE SCALE ACCORDINGLY

22x34 12/14/2023 4:16:41 PM

bcra
T 253.627.4367 F 253.627.4395 WWW.BCRADESIGN.COM
2106 PACIFIC AVENUE, SUITE 300, TACOMA, WA 98402

SEAL

PROJECT
PORT OF EVERETT
WINE WALK BUILDING A12
XXXX SEINER DRIVE
EVERETT, WASHINGTON 98201

REVISIONS

DATE
12.14.2023

BCRA NO.
23045.00.00

DRAWN BY: Author

REVIEWED BY:

SHEET TITLE
CANOPY DETAILS

bcra

© COPYRIGHT 2023 - BCRA, INC. ALL RIGHTS RESERVED

SHEET
A-562

PROGRESS SET

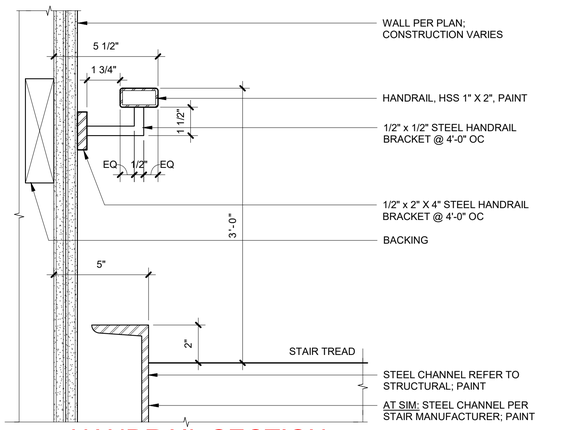

6 HANDRAIL SECTION
3" = 1'-0"

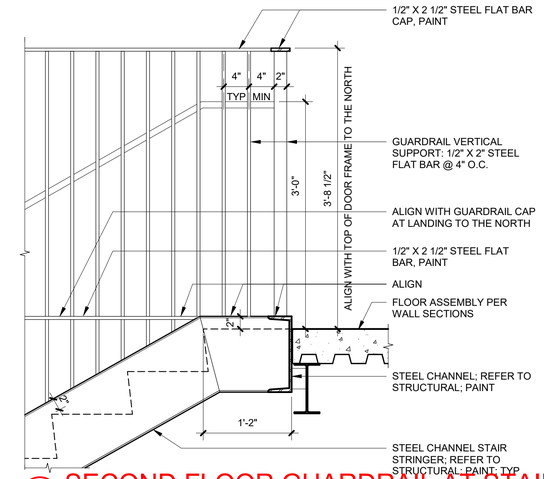

3 SECOND FLOOR GUARDRAIL AT STAIR
1" = 1'-0"

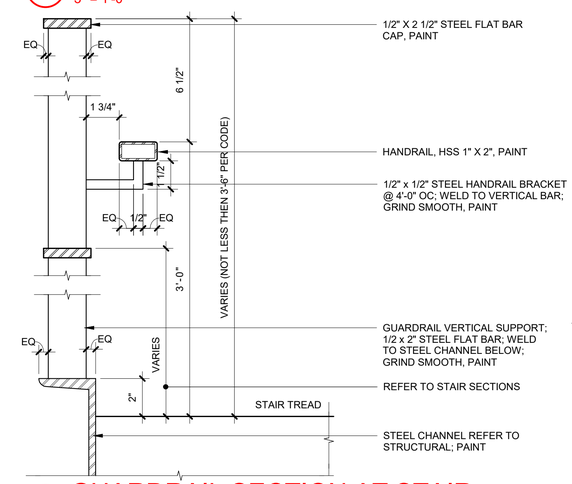

5 GUARDRAIL SECTION AT STAIR
3" = 1'-0"

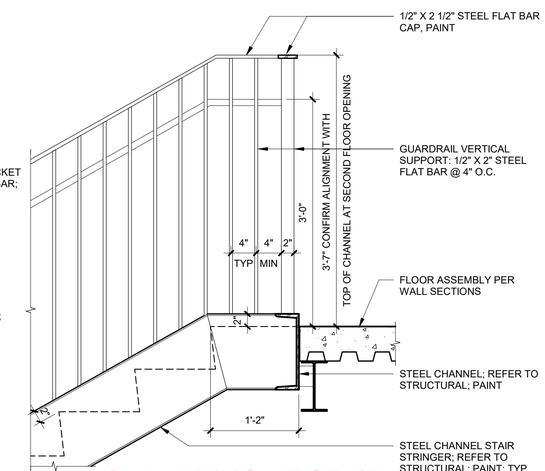

2 MID LANDING AT STAIR
1" = 1'-0"

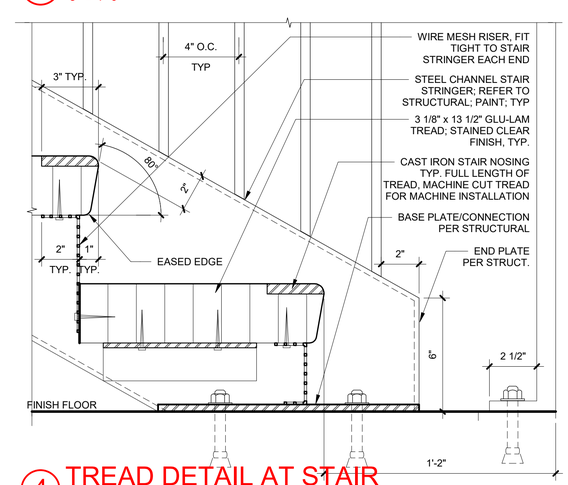

4 TREAD DETAIL AT STAIR
3" = 1'-0"

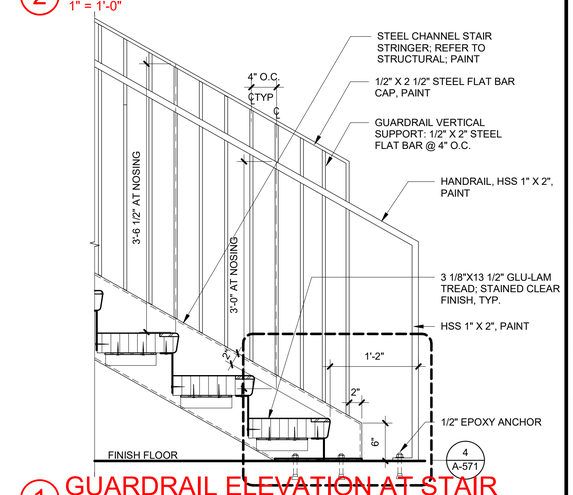

1 GUARDRAIL ELEVATION AT STAIR
1" = 1'-0"

IF SHEET MEASURES LESS THAN 22"X34", IT IS A REDUCED PRINT. REDUCE SCALE ACCORDINGLY

22x34 12/14/2023 4:18:42 PM

bcra
T 253.627.4367 F 253.627.4395 WWW.BCRADESIGN.COM
2106 PACIFIC AVENUE, SUITE 300, TACOMA, WA 98402

SEAL

PROJECT
PORT OF EVERETT
WINE WALK BUILDING A12
XXXX SEINER DRIVE
EVERETT, WASHINGTON 98201

REVISIONS

DATE
12.14.2023

BCRA NO.
23045.00.00

DRAWN BY: JC

REVIEWED BY: DD

SHEET TITLE
GUARDRAIL DETAILS, STAIR DETAILS

bcra
© COPYRIGHT 2023 - BCRA, INC. ALL RIGHTS RESERVED

SHEET
A-571

PROGRESS SET

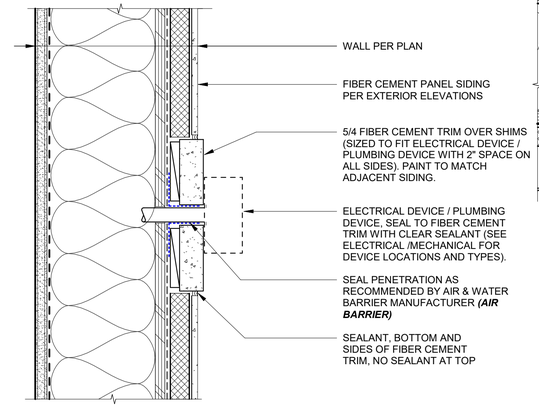

6 DEVICE PENETRATION AT FC
3" = 1'-0"

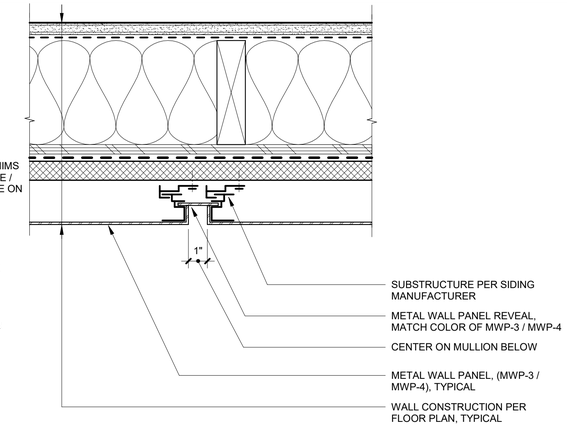

3 VERTICAL JOINT AT MWP
3" = 1'-0"

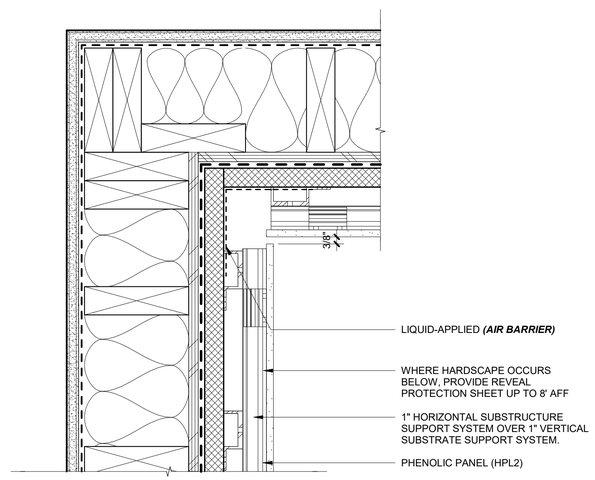

8 INSIDE CORNER AT PHENOLIC
3" = 1'-0"

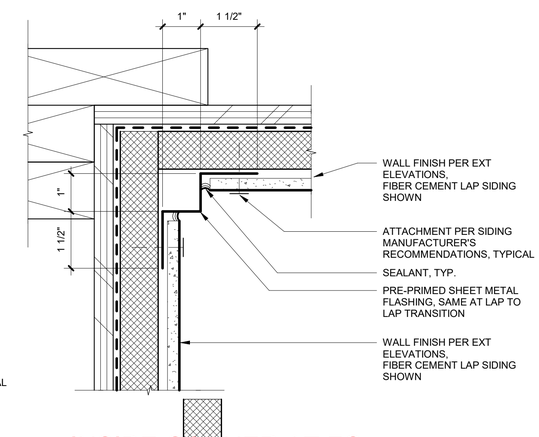

5 INSIDE CORNER AT FC
6" = 1'-0"

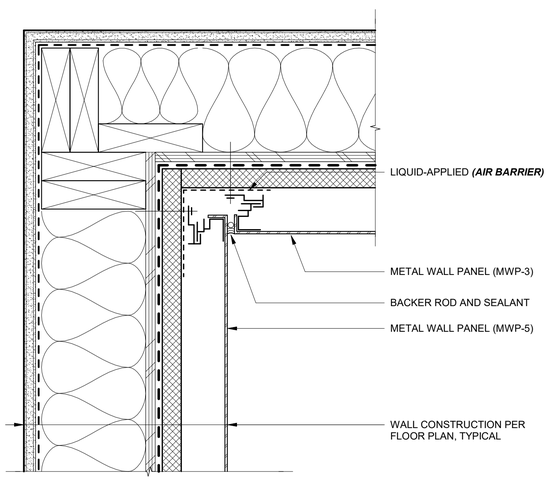

2 INSIDE CORNER AT MWP
3" = 1'-0"

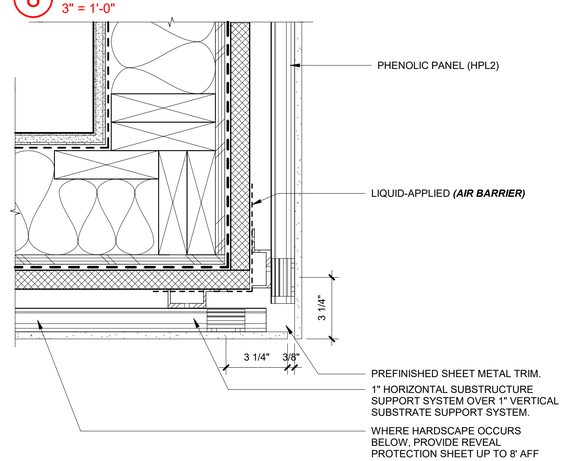

7 OUTSIDE CORNER AT PHENOLIC
3" = 1'-0"

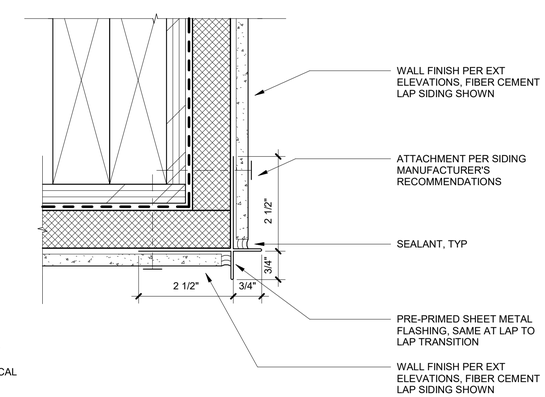

4 OUTSIDE CORNER AT FC
6" = 1'-0"

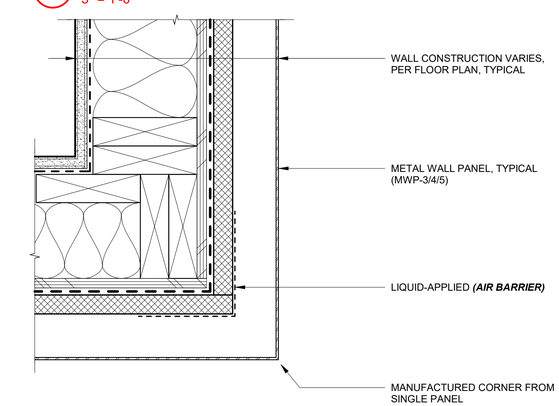

1 OUTSIDE CORNER AT MWP
3" = 1'-0"

22x34 12/14/2023 4:16:43 PM

IF SHEET MEASURES LESS THAN 22"X34", IT IS A REDUCED PRINT. REDUCE SCALE ACCORDINGLY

bcra
T 253.627.4367 F 253.627.4395 WWW.BCRADESIGN.COM
2106 PACIFIC AVENUE, SUITE 300, TACOMA, WA 98402

SEAL

PROJECT
PORT OF EVERETT
WINE WALK BUILDING A12
XXXX SEINER DRIVE
EVERETT, WASHINGTON 98201

REVISIONS

DATE
12.14.2023
BCRA NO.
23045.00.00
DRAWN BY: JC
REVIEWED BY: DO

SHEET TITLE
EXTERIOR WALL DETAILS - PLAN

bcra
© COPYRIGHT 2023 - BCRA, INC. ALL RIGHTS RESERVED

SHEET
A-591

PROGRESS SET

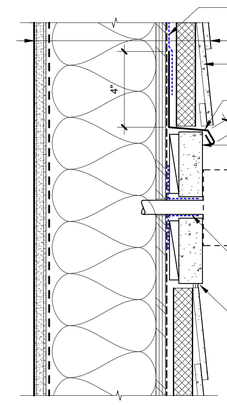

LIQUID FLASHING OVER HEAD FLASHING
WALL TYPE PER PLAN
FIBER CEMENT PANEL SIDING PER ELEVATION
PRE-PRIMED SHEET METAL FLASHING
5/4 FIBER CEMENT TRIM OVER SHIMS (SIZED TO FIT ELECTRICAL DEVICE / PLUMBING DEVICE WITH 2" SPACE ON ALL SIDES). PAINT TO MATCH ADJACENT SIDING.
ELECTRICAL DEVICE / PLUMBING DEVICE, SEAL TO FIBER CEMENT TRIM WITH CLEAR SEALANT (SEE ELECTRICAL /MECHANICAL FOR DEVICE LOCATIONS AND TYPES).
SEAL PENETRATION AS RECOMMENDED BY AIR & WATER BARRIER MANUFACTURER ***(AIR BARRIER)***
SEALANT, BOTTOM AND SIDES OF FIBER CEMENT TRIM, NO SEALANT AT TOP

6 DEVICE PENETRATION AT FC
3" = 1'-0"

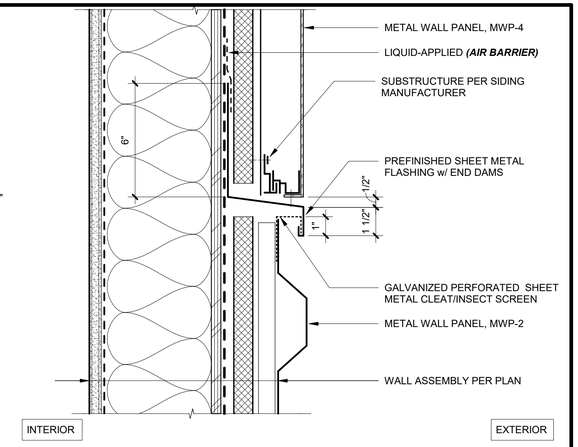

METAL WALL PANEL, MWP-4
LIQUID-APPLIED ***(AIR BARRIER)***
SUBSTRUCTURE PER SIDING MANUFACTURER
PREFINISHED SHEET METAL FLASHING w/ END DAMS
GALVANIZED PERFORATED SHEET METAL CLEAT/INSECT SCREEN
METAL WALL PANEL, MWP-2
WALL ASSEMBLY PER PLAN

3 VERTICAL TRANSITION AT MWP
3" = 1'-0"

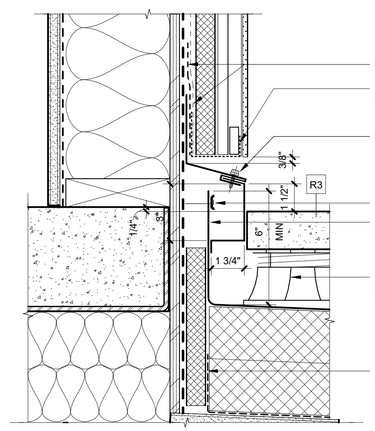

LIQUID APPLIED OVER FLASHING
GALVANIZED PERFORATED SHEET METAL INSECT SCREEN / 'Z' FURRING
PREFINISHED SHEET METAL 2-PIECE RECEIVER AND COUNTERFLASHING
CONTINUOUS TERMINATION BAR
CONTINUE SINGLE-PLY ROOFING BEHIND FLASHING
PEDASTAL ON BASE PAD ON MEMBRANE PROTECTION LAYER
SEAL AIR/VAPOR BARRIER TO RIGID INSULATION

8 PAVERS AT PHENOLIC
3" = 1'-0"

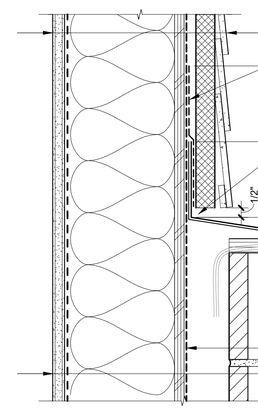

WALL ASSEMBLY PER PLAN
SELF ADHERED MEMBRANE; LAP OVER THRU WALL FLASHING
CONTINUOUS VENT STRIP W/ INSECT SCREEN ALONG BOTTOM EDGE OF SUBSTRUCTURE SYSTEM
PREFINISHED SHEET METAL THRU WALL FLASHING, ALIGN TO FLASHING AT ADJACENT WINDOW SILLS
16GA CONTINUOUS CLEAT
CONTINUOUS VENTING W/ INSECT SCREEN
AIR & WATER BARRIER
WALL ASSEMBLY PER PLAN

5 VERTICAL TRANSITION AT FC
3" = 1'-0"

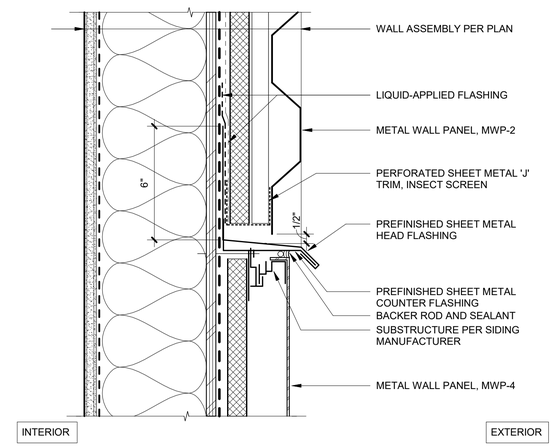

WALL ASSEMBLY PER PLAN
LIQUID-APPLIED FLASHING
METAL WALL PANEL, MWP-2
PERFORATED SHEET METAL 'J' TRIM, INSECT SCREEN
PREFINISHED SHEET METAL HEAD FLASHING
PREFINISHED SHEET METAL COUNTER FLASHING
BACKER ROD AND SEALANT
SUBSTRUCTURE PER SIDING MANUFACTURER
METAL WALL PANEL, MWP-4

2 VERTICAL TRANSITION AT MWP
3" = 1'-0"

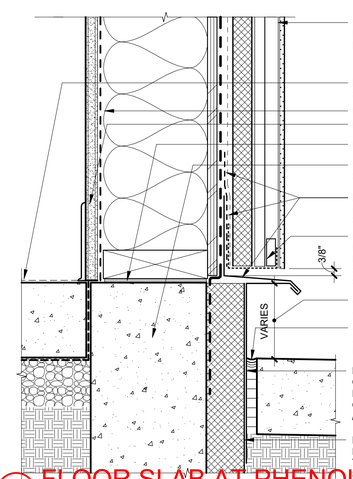

WHERE HARDSCAPE OCCURS BELOW, PROVIDE REVEAL PROTECTION SHEET UP TO 8' AFF
FINISH PER SCHEDULE OVER SLAB ON GRADE ***(AIR BARRIER)***.
GWB, HOLD 1/4" OFF FLOOR SLAB
BASE PER FINISH SCHEDULE
CONTINUOUS SILL GASKET
CONCRETE SLAB, REFER TO STRUCTURAL ***(AIR BARRIER)***
LIQUID APPLIED OVER RIGID INSULATION AND PREFINISHED SHEET METAL FLASHING
GALVANIZED PERFORATED SHEET METAL INSECT SCREEN AT BOTTOM OF HORIZONTAL SUBSTRUCTURE OVER VERTICAL SUBSTRUCTURE.
AT HARDSCAPE: 2" MINIMUM AT LANDSCAPE: 6" MINIMUM
AT HARDSCAPE: 1/2" EXPANSION JOINT. FILL TOP 1/2" WITH SEALANT, FLUSH WITH TOP OF SLAB
PREFINISHED SHEET METAL COUNTER FLASHING / INSULATION PROTECTION. EXTEND A MINIMUM OF 6" BELOW TOP OF HARDSCAPE / LANDSCAPE
R10 RIGID PERIMETER INSULATION, EXTEND 24" BELOW TOP OF SLAB OR TO TOP BOTTOM OF THICKENED SLAB, WHICHEVER IS LESS

7 FLOOR SLAB AT PHENOLIC
3" = 1'-0"

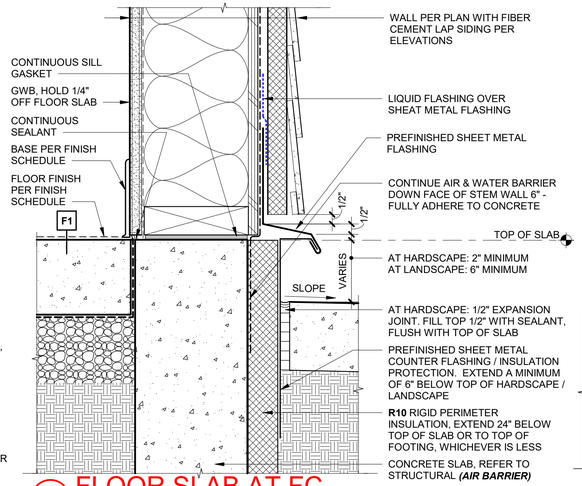

CONTINUOUS SILL GASKET
GWB, HOLD 1/4" OFF FLOOR SLAB
CONTINUOUS SEALANT
BASE PER FINISH SCHEDULE
FLOOR FINISH PER FINISH SCHEDULE
WALL PER PLAN WITH FIBER CEMENT LAP SIDING PER ELEVATIONS
LIQUID FLASHING OVER SHEAT METAL FLASHING
PREFINISHED SHEET METAL FLASHING
CONTINUE AIR & WATER BARRIER DOWN FACE OF STEM WALL 6" - FULLY ADHERE TO CONCRETE
TOP OF SLAB
AT HARDSCAPE: 2" MINIMUM AT LANDSCAPE: 6" MINIMUM
AT HARDSCAPE: 1/2" EXPANSION JOINT. FILL TOP 1/2" WITH SEALANT, FLUSH WITH TOP OF SLAB
PREFINISHED SHEET METAL COUNTER FLASHING / INSULATION PROTECTION. EXTEND A MINIMUM OF 6" BELOW TOP OF HARDSCAPE / LANDSCAPE
R10 RIGID PERIMETER INSULATION, EXTEND 24" BELOW TOP OF SLAB OR TO TOP OF FOOTING, WHICHEVER IS LESS
CONCRETE SLAB, REFER TO STRUCTURAL ***(AIR BARRIER)***

4 FLOOR SLAB AT FC
3" = 1'-0"

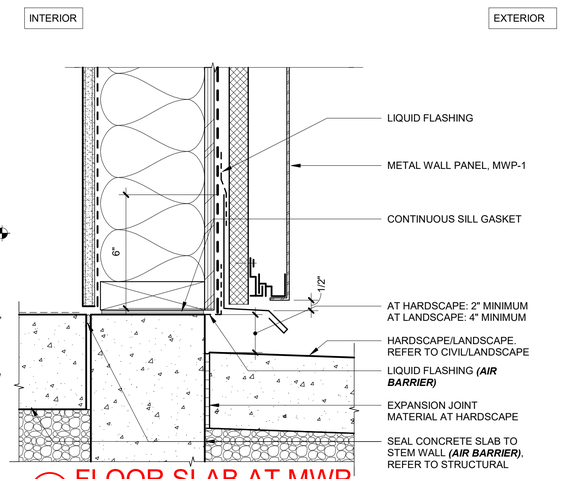

LIQUID FLASHING
METAL WALL PANEL, MWP-1
CONTINUOUS SILL GASKET
AT HARDSCAPE: 2" MINIMUM AT LANDSCAPE: 4" MINIMUM
HARDSCAPE/LANDSCAPE. REFER TO CIVIL/LANDSCAPE
LIQUID FLASHING ***(AIR BARRIER)***
EXPANSION JOINT MATERIAL AT HARDSCAPE
SEAL CONCRETE SLAB TO STEM WALL ***(AIR BARRIER)***, REFER TO STRUCTURAL

1 FLOOR SLAB AT MWP
3" = 1'-0"

IF SHEET MEASURES LESS THAN 22"X34", IT IS A REDUCED PRINT. REDUCE SCALE ACCORDINGLY

bcra
T 253.627.4367 F 253.627.4395 WWW.BCRADESIGN.COM
2106 PACIFIC AVENUE, SUITE 300, TACOMA, WA 98402

SEAL

PROJECT
PORT OF EVERETT
WINE WALK BUILDING A12
XXXX SEINER DRIVE
EVERETT, WASHINGTON 98201

REVISIONS

DATE
12.14.2023
BCRA NO.
23045.00.00
DRAWN BY: JC
REVIEWED BY: DD

SHEET TITLE
EXTERIOR WALL DETAILS - SECTION

bcra
© COPYRIGHT 2023 - BCRA, INC. ALL RIGHTS RESERVED

SHEET
A-592

PROGRESS SET

12/14/2023 5:16:44 PM
22c34

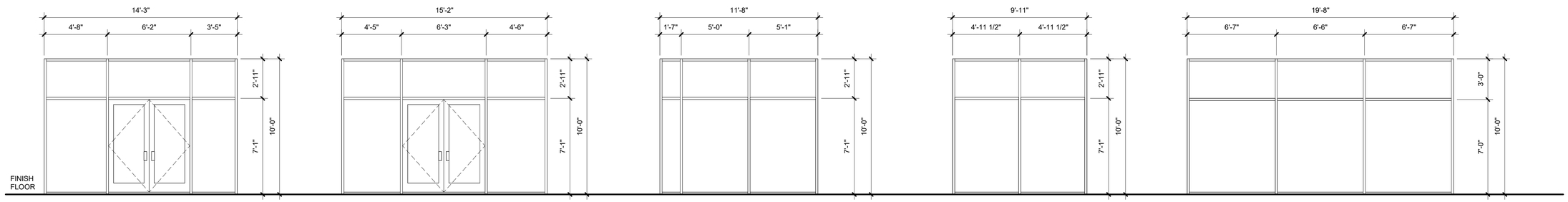

SF12

FRAME:	ALUMINUM
FINISH:	BLACK
GLAZING:	TBD
PROJECTION:	NONE
SHADING:	NONE

SF13

FRAME:	ALUMINUM
FINISH:	BLACK
GLAZING:	TBD
PROJECTION:	NONE
SHADING:	NONE

SF14

FRAME:	ALUMINUM
FINISH:	BLACK
GLAZING:	TBD
PROJECTION:	NONE
SHADING:	NONE

SF15

FRAME:	ALUMINUM
FINISH:	BLACK
GLAZING:	TBD
PROJECTION:	NONE
SHADING:	NONE

SF16

FRAME:	ALUMINUM
FINISH:	BLACK
GLAZING:	TBD
PROJECTION:	NONE
SHADING:	NONE

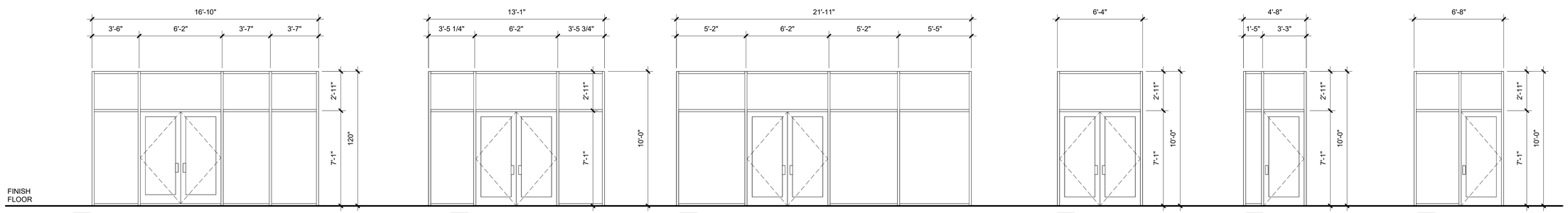

SF6

FRAME:	ALUMINUM
FINISH:	BLACK
GLAZING:	TBD
PROJECTION:	NONE
SHADING:	NONE

SF7

FRAME:	ALUMINUM
FINISH:	BLACK
GLAZING:	TBD
PROJECTION:	NONE
SHADING:	NONE

SF8

FRAME:	ALUMINUM
FINISH:	BLACK
GLAZING:	TBD
PROJECTION:	NONE
SHADING:	NONE

SF9

FRAME:	ALUMINUM
FINISH:	BLACK
GLAZING:	TBD
PROJECTION:	NONE
SHADING:	NONE

SF10

FRAME:	ALUMINUM
FINISH:	BLACK
GLAZING:	TBD
PROJECTION:	NONE
SHADING:	NONE

SF11

FRAME:	ALUMINUM
FINISH:	BLACK
GLAZING:	TBD
PROJECTION:	NONE
SHADING:	NONE

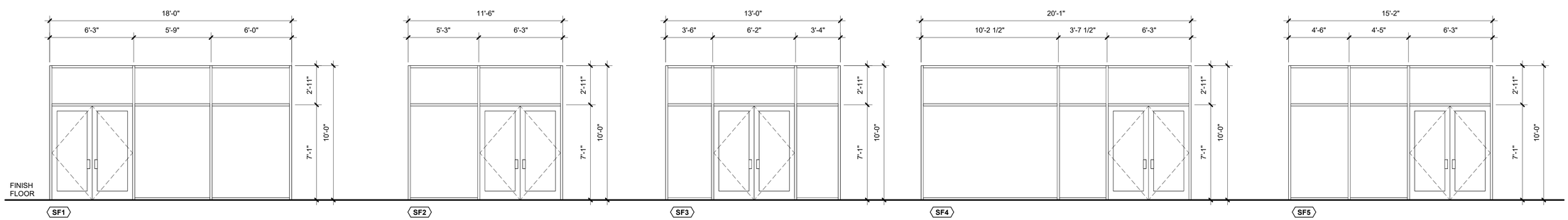

SF1

FRAME:	ALUMINUM
FINISH:	BLACK
GLAZING:	TBD
PROJECTION:	NONE
SHADING:	NONE

SF2

FRAME:	ALUMINUM
FINISH:	BLACK
GLAZING:	TBD
PROJECTION:	NONE
SHADING:	NONE

SF3

FRAME:	ALUMINUM
FINISH:	BLACK
GLAZING:	TBD
PROJECTION:	NONE
SHADING:	NONE

SF4

FRAME:	ALUMINUM
FINISH:	BLACK
GLAZING:	TBD
PROJECTION:	NONE
SHADING:	NONE

SF5

FRAME:	ALUMINUM
FINISH:	BLACK
GLAZING:	TBD
PROJECTION:	NONE
SHADING:	NONE

STOREFRONT LEGEND

1/4" = 1'-0"

22x34 12/14/2023 4:16:45 PM

IF SHEET MEASURES LESS THAN 22"X34", IT IS A REDUCED PRINT. REDUCE SCALE ACCORDINGLY

bcra
T 253.627.4367 F 253.627.4395 WWW.BCRADESIGN.COM
2106 PACIFIC AVENUE, SUITE 300, TACOMA, WA 98402

SEAL

PROJECT
PORT OF EVERETT
WINE WALK BUILDING A12
XXXX SEINER DRIVE
EVERETT, WASHINGTON 98201

REVISIONS

DATE
12.14.2023

BCRA NO.
23045.00.00

DRAWN BY:

REVIEWED BY:

SHEET TITLE
STOREFRONT TYPES

bcra

© COPYRIGHT 2023 - BCRA, INC. ALL RIGHTS RESERVED

SHEET
A-611

PROGRESS SET

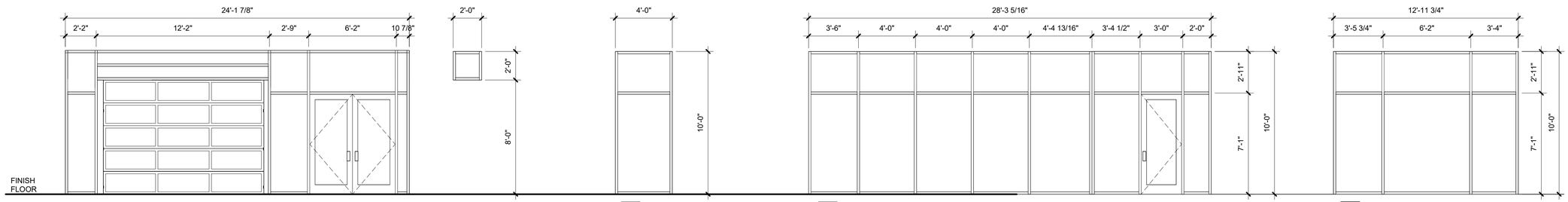

SF24

FRAME: ALUMINUM
FINISH: BLACK
GLAZING: TBD
PROJECTION: NONE
SHADING: NONE

SF25

FRAME: ALUMINUM
FINISH: BLACK
GLAZING: TBD
PROJECTION: NONE
SHADING: NONE

SF26

FRAME: ALUMINUM
FINISH: BLACK
GLAZING: TBD
PROJECTION: NONE
SHADING: NONE

SF27

FRAME: ALUMINUM
FINISH: BLACK
GLAZING: TBD
PROJECTION: NONE
SHADING: NONE

SF28

FRAME: ALUMINUM
FINISH: BLACK
GLAZING: TBD
PROJECTION: NONE
SHADING: NONE

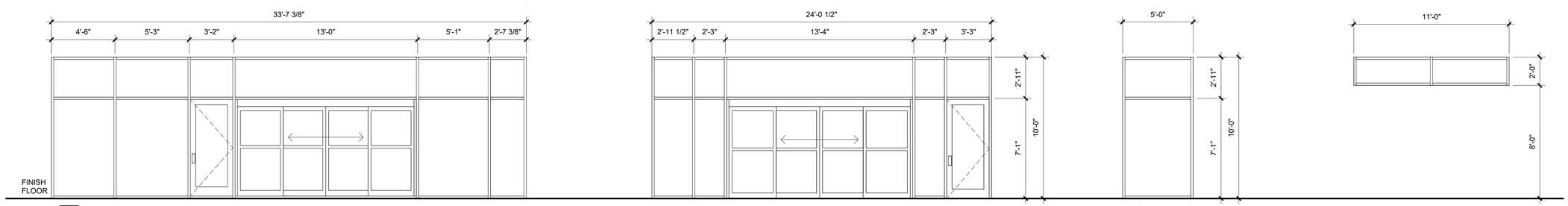

SF20

FRAME: ALUMINUM
FINISH: BLACK
GLAZING: TBD
PROJECTION: NONE
SHADING: NONE

SF21

FRAME: ALUMINUM
FINISH: BLACK
GLAZING: TBD
PROJECTION: NONE
SHADING: NONE

SF22

FRAME: ALUMINUM
FINISH: BLACK
GLAZING: TBD
PROJECTION: NONE
SHADING: NONE

SF23

FRAME: ALUMINUM
FINISH: BLACK
GLAZING: TBD
PROJECTION: NONE
SHADING: NONE

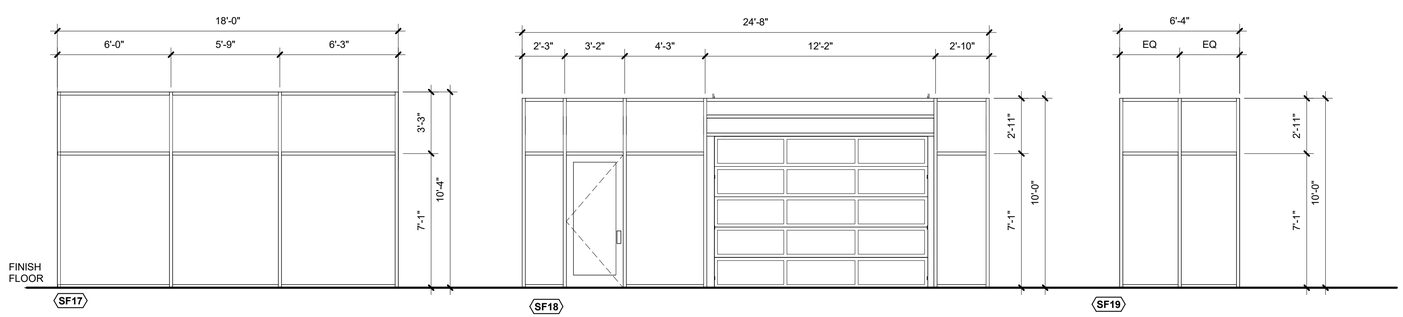

SF17

FRAME: ALUMINUM
FINISH: BLACK
GLAZING: TBD
PROJECTION: NONE
SHADING: NONE

SF18

FRAME: ALUMINUM
FINISH: BLACK
GLAZING: TBD
PROJECTION: NONE
SHADING: NONE

SF19

FRAME: ALUMINUM
FINISH: BLACK
GLAZING: TBD
PROJECTION: NONE
SHADING: NONE

STOREFRONT LEGEND

1/4" = 1'-0"

22x34 12/14/2023 4:16:46 PM

bcra
T 253.627.4367 F 253.627.4395 WWW.BCRADESIGN.COM
2106 PACIFIC AVENUE, SUITE 300, TACOMA, WA 98402

SEAL

PROJECT
PORT OF EVERETT
WINE WALK BUILDING A12
XXXX SEINER DRIVE
EVERETT, WASHINGTON 98201

REVISIONS

DATE
12.14.2023

BCRA NO.
23045.00.00

DRAWN BY: Author

REVIEWED BY:

SHEET TITLE
STOREFRONT TYPES

bcra

© COPYRIGHT 2023 - BCRA, INC. ALL RIGHTS RESERVED

SHEET

A-612

PROGRESS SET

IF SHEET MEASURES LESS THAN 22"X34", IT IS A REDUCED PRINT. REDUCE SCALE ACCORDINGLY

DOOR SCHEDULE

DOOR NUMBER	DOOR WIDTH	DOOR HEIGHT	DOOR DEPTH	DOOR TYPE	DOOR MATERIAL	DOOR FINISH	DOOR GLAZING	FRAME TYPE	FRAME MATERIAL	FRAME FINISH	DETAIL CALLOUT HEAD	DETAIL CALLOUT JAMB	DETAIL CALLOUT SILL	FIRE RATING LABEL	HARDWARE GROUP	REMARKS	DOOR NUMBER
101A	6' - 0"	7' - 0"	1 1/2"	B	AL	FF			AL	FF							101A
101B	6' - 0"	7' - 0"	1 1/2"	B	AL	FF			AL	FF							101B
101C	6' - 0"	7' - 0"	1 1/2"	B	AL	FF			AL	FF							101C
101D	3' - 0"	7' - 0"	1 3/4"	C	AL	FF			AL	FF							101D
102A	6' - 0"	7' - 0"	1 1/2"	B	AL	FF			AL	FF							102A
102B	3' - 0"	7' - 0"	1 3/4"	C	AL	FF			AL	FF							102B
103	4' - 0"	7' - 0"	1 3/4"	A	HM	PT		1	HM	PT							103
106	3' - 0"	7' - 0"	1 3/4"	A	SCWD	PT		1	WD	PT							106
107	3' - 0"	7' - 0"	1 3/4"	A	SCWD	PT		1	WD	PT							107
108	3' - 0"	7' - 0"	1 3/4"	A	HM	PT		1	HM	PT							108
109	3' - 0"	7' - 0"	1 3/4"	A	HM	PT		1	HM	PT							109
110A	3' - 0"	7' - 0"	1 3/4"	A	HM	PT		1	HM	PT							110A
110B	7' - 0"	7' - 0"	3"	E		FF				FF							110B
111	3' - 0"	7' - 0"	1 3/4"	A	HM	PT		1	HM	PT							111
112	3' - 0"	7' - 0"	1 3/4"	A	HM	PT		1	HM	PT							112
113A	6' - 0"	7' - 0"	1 1/2"	B	AL	FF			AL	FF							113A
113B	6' - 0"	7' - 0"	1 1/2"	B	AL	FF			AL	FF							113B
113C	3' - 0"	7' - 0"	1 3/4"	A	SCWD	FF		1	SCWD	FF							113C
114A	6' - 1"	6' - 10"	1 1/2"	B	AL	FF			AL	FF							114A
114B	6' - 0"	7' - 0"	1 1/2"	B	AL	FF			AL	FF							114B
114E	3' - 0"	7' - 0"	1 3/4"	C	AL	FF			AL	FF							114E
114F	11' - 3 1/4"	8' - 0"	1 3/4"	G		FF				FF							114F
115A	6' - 0"	7' - 0"	1 1/2"	B	AL	FF			AL	FF							115A
115B	6' - 0"	6' - 10"	1 1/2"	B	AL	FF			AL	FF							115B
116	3' - 0"	7' - 0"	1 3/4"	A	HM	PT			HM	PT							116
201A	3' - 0"	7' - 0"	1 3/4"	A	SCWD	PT		1	SCWD	PT							201A
201B	3' - 0"	7' - 0"	1 3/4"	C	AL	FF			AL	FF							201B
201C	13' - 2""	7' - 0"		D	AL	FF			AL	FF							201C
201D	12' - 10"	6' - 10"		D	AL	FF			AL	FF							201D
201E	3' - 0"	6' - 10"	1 3/4"	C	AL	FF			AL	FF							201E
201F	2' - 10"	7' - 0"	1 3/4"	C	AL	FF			AL	FF							201F
201G	6' - 0"	7' - 0"	1 1/2"	B	AL	FF			AL	FF							201G
201H	11' - 3 1/4"	8' - 0"	1 3/4"	G		FF				FF							201H
205	3' - 0"	7' - 0"	1 3/4"	A	SCWD	FF			WD	FF							205
206	3' - 0"	7' - 0"	1 3/4"	A	SCWD	FF			WD	FF							206
206A	6' - 0"	6' - 10"	1 1/2"	B	AL	FF			AL	FF							206A
206B	3' - 0"	7' - 0"	1 3/4"	C	AL	FF			AL	FF							206B
206C	7' - 9"	6' - 7 159/256"		F	AL	FF			AL	FF							206C
206D	3' - 0"	7' - 0"	1 3/4"	C	AL	FF			AL	FF							206D
206E	7' - 9"	6' - 7 159/256"		F	AL	FF			AL	FF							206E
208A	3' - 0"	7' - 0"	1 3/4"	C	AL	FF			AL	FF							208A
208B	11' - 3 1/4"	8' - 0"	1 3/4"	G		FF				FF							208B
208C	11' - 3 1/4"	8' - 0"	1 3/4"	G		FF				FF							208C
208D	6' - 0"	7' - 0"	1 1/2"	B	AL	FF			AL	FF							208D
208E	2' - 10"	7' - 0"	1 3/4"	C	AL	FF			AL	FF							208E
208F	3' - 0"	7' - 0"	1 3/4"	A	HM	PT			HM	PT							208F

DOOR SCHEDULE GENERAL NOTES

1. FIELD VERIFY ALL DOOR/FRAME OPENING SIZES.
2. REFER TO A-501a FOR TYPICAL ADA CLEARANCE REQUIREMENTS AT DOORS.
3. PROVIDE BACKING IN FRAMING FOR ALL WALL-MOUNTED HARDWARE. REFER TO FRAMING SPECIFICATIONS FOR LOCATIONS AND REQUIREMENTS.

GLAZING TYPES

GL1 1" INSULATED TEMPERED GLASS

GL2 1/4" TEMPERED GLASS

DOOR SCHEDULE REMARKS

A. EXTERIOR DOOR. SERVES AS AIR BARRIER. AT HOLLOW METAL: PROVIDE INSULATED DOOR.
B. PAIR OF DOORS.
C. SOUND DOOR. PROVIDE ACOUSTIC DOOR SEALS.
D. PROVIDE AUTOMATIC CLOSER.
E. PROVIDE PANIC HARDWARE.
F. PROVIDE MAGNETIC HOLD OPEN.
G. PROVIDE AUTOMATIC OPERATOR.

DOOR SCHEDULE ABBREVIATIONS

AL	ALUMINUM
FF	FACTORY FINISH
GL-	GLAZING TYPE
HM	HOLLOW METAL
PT	PAINT
SCWD	SOLID CORE WOOD DOOR
WD	WOOD

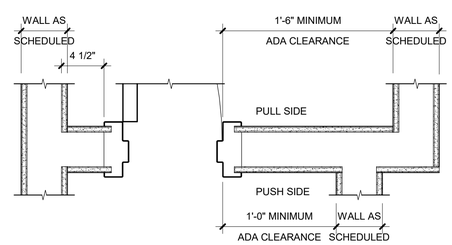

*CLEARANCE ON PUSH SIDE ONLY REQUIRED AT DOORS WITH BOTH A CLOSER AND LATCH PROVIDED

3 TYPICAL DOOR ADA CLEARANCE
1 1/2" = 1'-0"

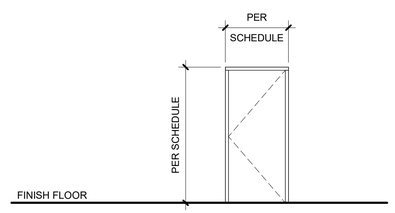

1

2 DOOR FRAME TYPES
1/4" = 1'-0"

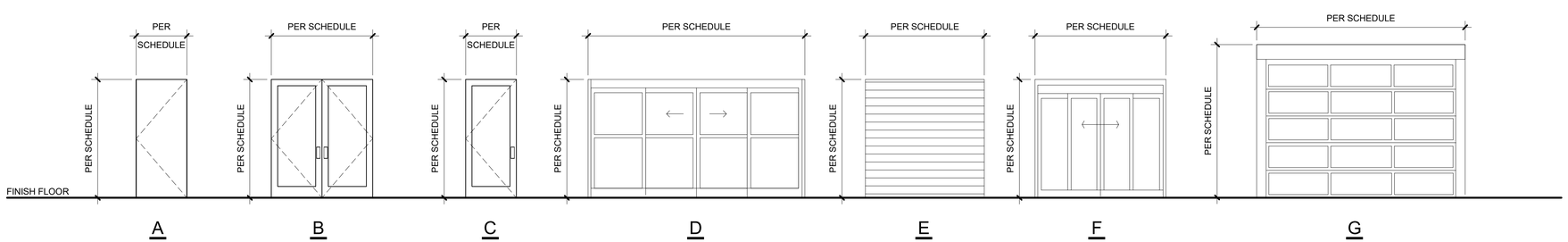

1 DOOR TYPES
1/4" = 1'-0"

bcra
T 253.627.4367 F 253.627.4395 WWW.BCRADESIGN.COM
2106 PACIFIC AVENUE, SUITE 300, TACOMA, WA 98402

SEAL

PROJECT
PORT OF EVERETT
WINE WALK BUILDING A12
XXXX SEINER DRIVE
EVERETT, WASHINGTON 98201

REVISIONS

DATE 12.14.2023
BCRA NO. 23045.00.00
DRAWN BY: Author
REVIEWED BY:
SHEET TITLE
DOOR SCHEDULE, DOOR FRAME TYPES

bcra
© COPYRIGHT 2023 - BCRA, INC. ALL RIGHTS RESERVED

SHEET
A-613
PROGRESS SET

IF SHEET MEASURES LESS THAN 22"X34", IT IS A REDUCED PRINT. REDUCE SCALE ACCORDINGLY

22x34 12/14/2023 4:16:48 PM

ASSEMBLY TYPE AND DESCRIPTION	ASSEMBLY COMPONENTS - PLAN VIEW	RATED ASSEMBLY REQUIREMENTS REFER TO G-201 FOR LOCATIONS OF WALLS REQUIRING FIRE-RATED CONSTRUCTION
6W8 6" WOOD STUD WITH STONE VENEER	• (1) LAYER 5/8" TYPE 'X' GWB • SMART VAPOR BARRIER • 2X6 WOOD FRAMING @ 16" OC, WITH BATT INSULATION (R-20) • PLYWOOD SHEATHING, REFER TO STRUCTURAL • SHEET-APPLIED AIR/WEATHER BARRIER SYSTEM ***(AIR BARRIER)*** • 1" RIGID INSULATION (R-3.8) • LATH • MORTAR SCRATCH COAT • MORTAR SETTING BED • ADHERED MANUFACTURED STONE VENEER 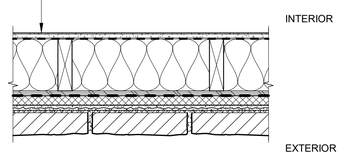 SCALE: 1 1/2" = 1'-0"	
6W7 6" WOOD STUD WITH PHENOLIC PANELS	• (1) LAYER 5/8" TYPE 'X' GWB • SMART VAPOR BARRIER • 2X6 WOOD FRAMING @ 16" OC, WITH BATT INSULATION (R-20) • PLYWOOD SHEATHING, REFER TO STRUCTURAL • SHEET-APPLIED AIR/WEATHER BARRIER SYSTEM ***(AIR BARRIER)*** • 1" RIGID INSULATION (R-3.8) • 1" VERTICAL SUBSTRUCTURE SUPPORT SYSTEM • 1" HORIZONTAL SUBSTRUCTURE SUPPORT SYSTEM • PHENOLIC PANELS 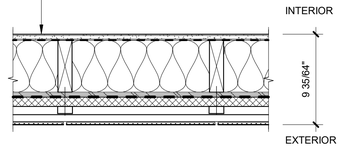 SCALE: 1 1/2" = 1'-0"	
6W6 6" WOOD STUD WITH FIBER CEMENT LAP SIDING	(1) LAYER 5/8" TYPE 'X' GWB SMART VAPOR BARRIER **AT SIM** PLYWOOD SHEATHING PER STRUCTURAL 2X6 WOOD FRAMING @ 16" OC, WITH BATT INSULATION (R-20) PLYWOOD SHEATHING, REFER TO STRUCTURAL SHEET-APPLIED AIR/WEATHER BARRIER SYSTEM ***(AIR BARRIER)*** 1" RIGID INSULATION (R-3.8) FIBER CEMENT LAP SIDING, PER EXTERIOR ELEVATIONS 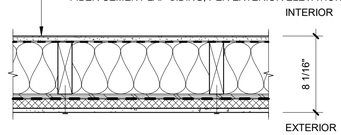 SCALE: 1 1/2" = 1'-0"	

ASSEMBLY TYPE AND DESCRIPTION	ASSEMBLY COMPONENTS - PLAN VIEW	RATED ASSEMBLY REQUIREMENTS REFER TO G-201 FOR LOCATIONS OF WALLS REQUIRING FIRE-RATED CONSTRUCTION
6W5 6" WOOD STUD WITH METAL PANELS	• (1) LAYER 5/8" TYPE 'X' GWB • SMART VAPOR BARRIER **AT SIM** PLYWOOD SHEATHING PER STRUCTURAL • 2X6 WOOD FRAMING @ 16" OC, WITH BATT INSULATION (R-20) • PLYWOOD SHEATHING, REFER TO STRUCTURAL • SHEET-APPLIED AIR/WEATHER BARRIER SYSTEM ***(AIR BARRIER)*** • 1" RIGID INSULATION (R-3.8) • STRAPPING/SUBSTRUCTURE SUPPORT SYSTEM, PER PANELS MANUFACTURER • PREFINISHED METAL PANELS, PER EXTERIOR ELEVATIONS 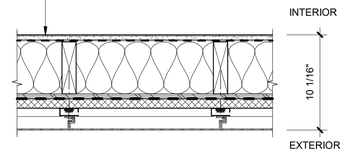 SCALE: 1 1/2" = 1'-0"	
6W4 6" WOOD STUD PILASTER WALL	• PHENOLIC PANEL PER EXTERIOR ELEVATIONS • 1" VERTICAL SUBSTRUCTURE SUPPORT SYSTEM, • 1" HORIZONTAL SUBSTRUCTURE SUPPORT SYSTEM • SHEET APPLIED AIR/WEATHER BARRIER SYSTEM • PLYWOOD SHEATHING, REFER TO STRUCTURAL • 2X6 WOOD FRAMING @ 16" OC • PLYWOOD SHEATHING, REFER TO STRUCTURAL • STRAPPING/SUBSTRUCTURE SUPPORT SYSTEM, PER PANELS MANUFACTURER • PREFINISHED METAL PANELS, PER EXTERIOR ELEVATIONS 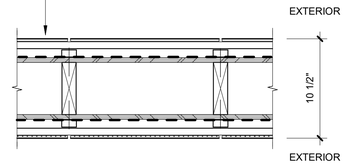 SCALE: 1 1/2" = 1'-0"	
6W3 6" WOOD STUD SHEAR WALL	(1) LAYER 5/8" TYPE 'X' GWB **AT SIM** PLYWOOD SHEATHING PER STRUCTURAL 2X6 WOOD FRAMING @ 16" OC, WITH ACOUSTIC BATT INSULATION PLYWOOD SHEATHING, REFER TO STRUCTURAL (1) LAYER 5/8" TYPE 'X' GWB 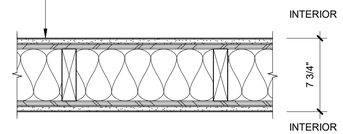 SCALE: 1 1/2" = 1'-0"	
6W2 6" WOOD STUD WALL	(1) LAYER 5/8" TYPE 'X' GWB 2X6 WOOD FRAMING @ 16" OC, WITH ACOUSTIC BATT INSULATION (1) LAYER 5/8" TYPE 'X' GWB 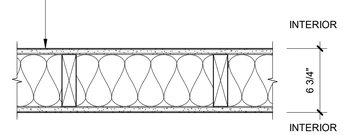 SCALE: 1 1/2" = 1'-0"	AT SHAFT WALLS **GA FILE NO. WP 3661 (1 HR.)** ONE LAYER 5/8" TYPE X GYPSUM WALLBOARD 2x6 WD STUDS @ 16"O.C 2 1/4" TYPE S OR W DRYWALL SCREWS VERTICAL JOINTS STAGGERED 16" O.C., HORIZONTAL JOINTS STAGGERED 24" O.C. OPP. SIDES

ASSEMBLY TYPE AND DESCRIPTION	ASSEMBLY COMPONENTS - PLAN VIEW	RATED ASSEMBLY REQUIREMENTS REFER TO G-201 FOR LOCATIONS OF WALLS REQUIRING FIRE-RATED CONSTRUCTION
6W1 6" WOOD STUD CHASE WALL	(1) LAYER 5/8" TYPE 'X' GWB 2X6 WOOD FRAMING @ 16" OC 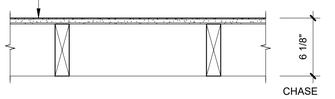 SCALE: 1 1/2" = 1'-0"	
4W1 4" WOOD STUD CHASE WALL	(1) LAYER 5/8" TYPE 'X' GWB 2X4 WOOD FRAMING @ 16" OC SCALE: 1 1/2" = 1'-0"	

INTERIOR WALL ASSEMBLY GENERAL NOTES

EXTERIOR WALL ASSEMBLY GENERAL NOTES

ACOUSTIC WALL ASSEMBLY GENERAL NOTES

bcra
T 253.627.4367 F 253.627.4395 WWW.BCRADESIGN.COM
2106 PACIFIC AVENUE, SUITE 300, TACOMA, WA 98402

SEAL

PROJECT
PORT OF EVERETT
WINE WALK BUILDING A12
XXXX SEINER DRIVE
EVERETT, WASHINGTON 98201

REVISIONS

DATE
12.14.2023

BCRA NO.
23045.00.00

DRAWN BY: JC

REVIEWED BY: DO

SHEET TITLE
INTERIOR WALL ASSEMBLY TYPES, EXTERIOR WALL ASSEMBLY TYPES

bcra

© COPYRIGHT 2023 - BCRA, INC. ALL RIGHTS RESERVED.

SHEET
A-621a

PROGRESS SET

22x34 12/14/2023 4:16:49 PM

IF SHEET MEASURES LESS THAN 22"X34", IT IS A REDUCED PRINT. REDUCE SCALE ACCORDINGLY

ASSEMBLY TYPE AND DESCRIPTION	ASSEMBLY COMPONENTS - PLAN VIEW	RATED ASSEMBLY REQUIREMENTS REFER TO G-201 FOR LOCATIONS OF WALLS REQUIRING FIRE-RATED CONSTRUCTION

ASSEMBLY TYPE AND DESCRIPTION	ASSEMBLY COMPONENTS - PLAN VIEW	RATED ASSEMBLY REQUIREMENTS REFER TO G-201 FOR LOCATIONS OF WALLS REQUIRING FIRE-RATED CONSTRUCTION
6W11 6" WOOD STUD WITH FIBER CEMENT LAP SIDING **(AT UNCONDITIONED SPACE AT STAIRWELL)** SCALE: 1 1/2" = 1'-0"	• (1) LAYER 5/8" TYPE 'X' GWB • 2X6 WOOD FRAMING @ 16" OC, • PLYWOOD SHEATHING, REFER TO STRUCTURAL • SMART VAPOR BARRIER • 1" FURRING • FIBER CEMENT LAP SIDING, PER EXTERIOR ELEVATIONS 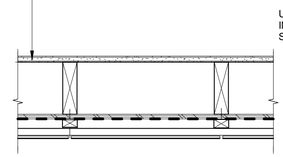 UNCONDITIONED INTERIOR (STAIR SIDE) EXTERIOR	

ASSEMBLY TYPE AND DESCRIPTION	ASSEMBLY COMPONENTS - PLAN VIEW	RATED ASSEMBLY REQUIREMENTS REFER TO G-201 FOR LOCATIONS OF WALLS REQUIRING FIRE-RATED CONSTRUCTION
6W10 6" WOOD STUD SHEAR WALL **(AT UNCONDITIONED SPACE AT SHEARWALL)** SCALE: 1 1/2" = 1'-0"	PLYWOOD SHEATHING, REFER TO STRUCTURAL 2X6 WOOD FRAMING @ 16" OC PLYWOOD SHEATHING, REFER TO STRUCTURAL (1) LAYER 5/8" GWB 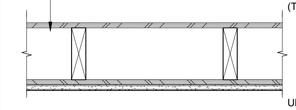 UNCONDITIONED INTERIOR (TENANT SIDE) UNCONDITIONED INTERIOR (STAIR SIDE)	
6W9 6" WOOD STUD WITH FIBER CEMENT LAP SIDING **(AT UNCONDITIONED SPACE AT SHEARWALL)** SCALE: 1 1/2" = 1'-0"	• 2X6 WOOD FRAMING @ 16" OC, • PLYWOOD SHEATHING, REFER TO STRUCTURAL • SMART VAPOR BARRIER • 1" FURRING • FIBER CEMENT LAP SIDING, PER EXTERIOR ELEVATIONS 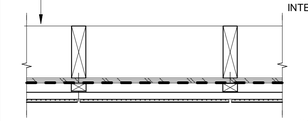 UNCONDITIONED INTERIOR EXTERIOR	

INTERIOR WALL ASSEMBLY GENERAL NOTES

EXTERIOR WALL ASSEMBLY GENERAL NOTES

ACOUSTIC WALL ASSEMBLY GENERAL NOTES

bcra
T 253.627.4367 F 253.627.4395 WWW.BCRADESIGN.COM
2106 PACIFIC AVENUE, SUITE 300, TACOMA, WA 98402

SEAL

PROJECT
PORT OF EVERETT
WINE WALK BUILDING A12
XXXX SEINER DRIVE
EVERETT, WASHINGTON 98201

REVISIONS

DATE
12.14.2023
BCRA NO.
23045.00.00
DRAWN BY: Author
REVIEWED BY:
SHEET TITLE
INTERIOR WALL ASSEMBLY TYPES, EXTERIOR WALL ASSEMBLY TYPES

bcra
© COPYRIGHT 2023 - BCRA, INC. ALL RIGHTS RESERVED.
SHEET
A-621b
PROGRESS SET

22x34 12/14/2023 4:16:49 PM

IF SHEET MEASURES LESS THAN 22"X34", IT IS A REDUCED PRINT. REDUCE SCALE ACCORDINGLY

ASSEMBLY TYPE AND DESCRIPTION	ASSEMBLY COMPONENTS - SECTION VIEW

R4

SINGLE-PLY ROOFING MECHANICALLY FASTENED AT CANOPY

MECHANICALLY FASTENED SINGLE-PLY ROOFING MEMBRANE
R-9.75 RIGID INSULATION AND TAPERED RIGID INSULATION
ROOF AIR / VAPOR BARRIER
1/2" GYPSUM BOARD
METAL DECKING, REFER TO STRUCTURAL
ROOF FRAMING, REFER TO STRUCTURAL

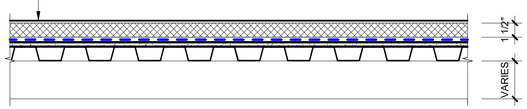

SCALE: 1 1/2" = 1'-0"

R3

PAVERS ON SINGLE-PLY ROOFING MECHANICALLY FASTENED

PLAZA PAVER SYSTEM
SINGLE-PLY ROOFING MEMBRANE
R-9.75 RIGID INSULATION AND TAPERED RIGID INSULATION
ROOF AIR / VAPOR BARRIER ***(AIR BARRIER)***
PLYWOOD SHEATHING, REFER TO STRUCTURAL
ROOF FRAMING, REFER TO STRUCTURAL
FIBER CEMENT SOFFIT

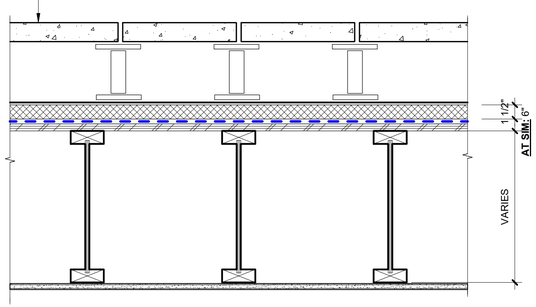

SCALE: 1 1/2" = 1'-0"

ASSEMBLY TYPE AND DESCRIPTION	ASSEMBLY COMPONENTS - SECTION VIEW

R2

SINGLE-PLY ROOFING MECHANICALLY FASTENED

MECHANICALLY FASTENED SINGLE-PLY ROOFING MEMBRANE
R-39 RIGID INSULATION AND TAPERED RIGID INSULATION
ROOF AIR / VAPOR BARRIER ***(AIR BARRIER)***
PLYWOOD SHEATHING, REFER TO STRUCTURAL
PLATFORM OVERFRAMING, REFER TO STRUCTURAL
TONGUE AND GROOVE DECKING, REFER TO STRUCTURAL
ROOF FRAMING, REFER TO STRUCTURAL

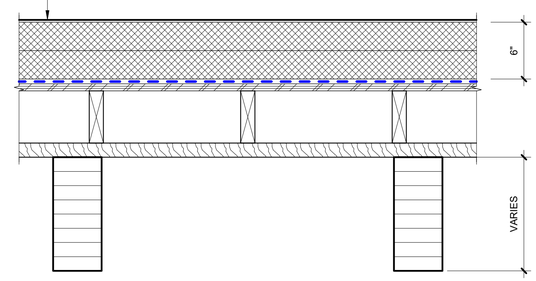

SCALE: 1 1/2" = 1'-0"

R1

STANDING SEAM METAL ROOF OVER TJI JOISTS

PHOTOVOLTAIC PANEL SYSTEM WITH ATTACHMENT CLIPS WHERE SHOWN ON ROOF PLAN
STANDING SEAM METAL ROOF SYSTEM
(1) LAYER OF UNDERLAYMENT
R-39 RIGID INSULATION
ROOF AIR / VAPOR BARRIER ***(AIR BARRIER),*** *(ICE AND WATER SHIELD AT PERIMETER PER MANUFACTURER)*
PLYWOOD SHEATHING, REFER TO STRUCTURAL
TONGUE AND GROOVE DECKING, REFER TO STRUCTURAL
ROOF FRAMING, REFER TO STRUCTURAL

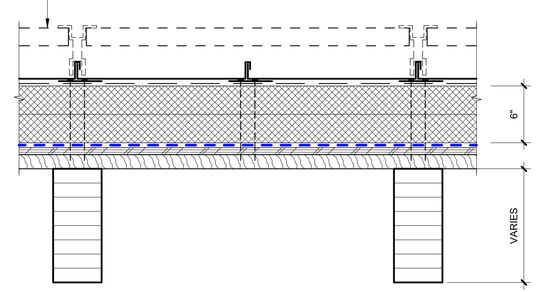

SCALE: 1 1/2" = 1'-0"

ASSEMBLY TYPE AND DESCRIPTION	ASSEMBLY COMPONENTS - SECTION VIEW

F2

TOPPING SLAB ON WOOD FRAMING

FINISH AS SCHEDULED
GYPSUM CONCRETE TOPPING SLAB
INSTALL A DOUBLE WOOD BOTTOM PLATE ON WALLS; INSTALL THE LOWER PLATE PRIOR TO PLACEMENT OF GYPSUM CONCRETE TOPPING SLAB
PLYWOOD SHEATHING, REFER TO STRUCTURAL
FLOOR FRAMING WITH ACOUSTIC INSULATION, REFER TO STRUCTURAL
CEILING, WHERE OCCURS, PER REFLECTED CEILING PLANS

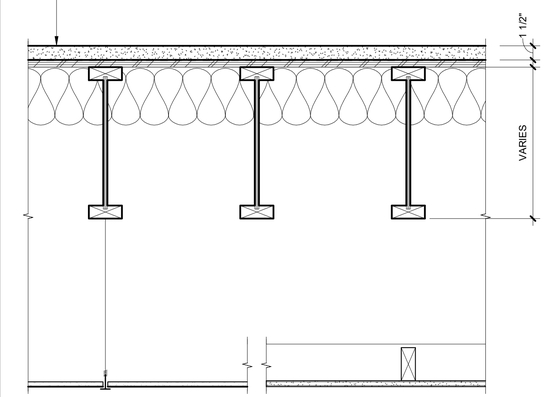

SCALE: 1 1/2" = 1'-0"

F1

SLAB ON GRADE

FINISH PER FINISH SCHEDULE
SLAB ON GRADE ***(AIR BARRIER)***; REFER TO STRUCTURAL, THICKNESS VARIES
WHERE INDICATED ON FLOOR PLANS, SLOPE TO DRAIN
VAPOR RETARDER
4" CAPILLARY BREAK
SUBGRADE

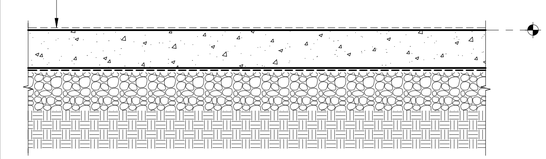

SCALE: 1 1/2" = 1'-0"

bcra
T 253.627.4367 F 253.627.4395 WWW.BCRADESIGN.COM
2106 PACIFIC AVENUE, SUITE 300, TACOMA, WA 98402

SEAL

PROJECT
PORT OF EVERETT
WINE WALK BUILDING A12
XXXX SEINER DRIVE
EVERETT, WASHINGTON 98201

REVISIONS

DATE
12.14.2023
BCRA NO.
23045.00.00
DRAWN BY: JC
REVIEWED BY: DD
SHEET TITLE
FLOOR AND ROOF ASSEMBLY TYPES

bcra
© COPYRIGHT 2023 - BCRA, INC. ALL RIGHTS RESERVED

SHEET
A-622a

PROGRESS SET

IF SHEET MEASURES LESS THAN 22"X34", IT IS A REDUCED PRINT. REDUCE SCALE ACCORDINGLY

22x34 12/14/2023 4:16:50 PM

ASSEMBLY TYPE AND DESCRIPTION	ASSEMBLY COMPONENTS - SECTION VIEW

ASSEMBLY TYPE AND DESCRIPTION	ASSEMBLY COMPONENTS - SECTION VIEW

ASSEMBLY TYPE AND DESCRIPTION	ASSEMBLY COMPONENTS - SECTION VIEW
R6 STANDING SEAM METAL ROOF OVER TJI JOISTS **(AT UNCONDITIONED SPACE)** SCALE: 1 1/2" = 1'-0"	PHOTOVOLTAIC PANEL SYSTEM WITH ATTACHMENT CLIPS WHERE SHOWN ON ROOF PLAN STANDING SEAM METAL ROOF SYSTEM ROOF AIR / VAPOR BARRIER, *(ICE AND WATER SHIELD AT PERIMETER PER MANUFACTURER)* PLYWOOD SHEATHING, REFER TO STRUCTURAL 2X6 FRAMING TONGUE AND GROOVE DECKING, REFER TO STRUCTURAL ROOF FRAMING, REFER TO STRUCTURAL 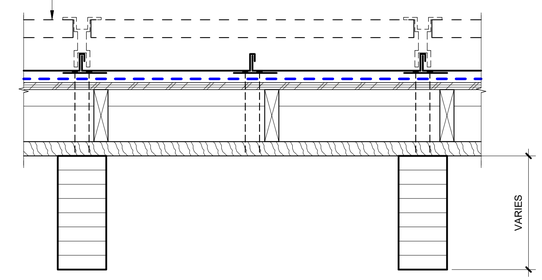
R5 PAVERS ON SINGLE-PLY ROOFING MECHANICALLY FASTENED **(AT UNCONDITIONED SPACE)** SCALE: 1 1/2" = 1'-0"	PLAZA PAVER SYSTEM SINGLE-PLY ROOFING MEMBRANE 2X6 FRAMING ROOF AIR / VAPOR BARRIER PLYWOOD SHEATHING, REFER TO STRUCTURAL ROOF FRAMING WITH R-49 BATT INSULATION, REFER TO STRUCTURAL 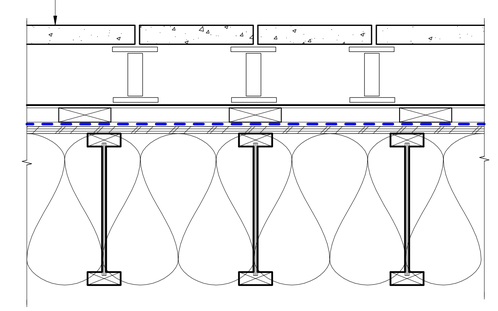

bcra
T 253.627.4367 F 253.627.4395 WWW.BCRADESIGN.COM
2100 PACIFIC AVENUE, SUITE 300, TACOMA, WA 98402

SEAL

PROJECT
PORT OF EVERETT
WINE WALK BUILDING A12
XXXX SEINER DRIVE
EVERETT, WASHINGTON 98201

REVISIONS

DATE
12.14.2023

BCRA NO.
23045.00.00

DRAWN BY: Author

REVIEWED BY:

SHEET TITLE
FLOOR AND ROOF ASSEMBLY TYPES

bcra

© COPYRIGHT 2023 - BCRA, INC. ALL RIGHTS RESERVED

SHEET
A-622b

PROGRESS SET

IF SHEET MEASURES LESS THAN 22"X34", IT IS A REDUCED PRINT. REDUCE SCALE ACCORDINGLY

22x34 12/14/2023 4:16:50 PM

WINE WALK BUILDING A12

XXXX SEINER DRIVE
EVERETT, WASHINGTON 98201

100% DD Set
12/13/2023

ABBREVIATIONS

@	AT
Ø	DIAMETER
#	POUND OR NUMBER
AAC	AUTOCLAVED AERATED CONCRETE
AB	ANCHOR BOLT
ADJ	ADJACENT
AFF	ABOVE FINISH FLOOR
AISC	AMERICAN INSTITUTE OF STEEL CONSTRUCTION
AITC	AMERICAN INSTITUTE OF TIMBER CONSTRUCTION
ANSI	AMERICAN NATIONAL STANDARDS INSTITUTE
ASD	ALLOWABLE STRESS DESIGN
ASCE	AMERICAN SOCIETY OF CIVIL ENGINEERS
ASTM	AMERICAN SOCIETY FOR TESTING AND MATERIALS
AWS	AMERICAN WELDING SOCIETY
AWC	AMERICAN WOOD COUNCIL
BLKG	BLOCKING
BM	BEAM
BNDY	BOUNDARY
BN	BOUNDARY NAILING
BOT	BOTTOM
BRG	BEARING
BS	BOTH SIDES
BTWN	BETWEEN
CIP	CAST-IN-PLACE
CJ	CONSTRUCTION/CONTROL JOINT
CL	CENTERLINE
CLG	CEILING
CLR	CLEAR
CLT	CROSS-LAMINATED TIMBER
CMU	CONCRETE MASONRY UNIT
COL	COLUMN
CONC	CONCRETE
CONT	CONTINUOUS
CONTR	CONTRACTOR
CSK	COUNTERSINK
CTR	CENTER
CVR	COVER
DBA	DEFORMED BAR ANCHOR
DBL	DOUBLE
DIAPH	DIAPHRAGM
DIM	DIMENSION
D	DEEP
DF	DOUGLAS-FIR
DLT	DOWEL LAMINATED TIMBER
DT	PRE-ENGINEERED DRAG TRUSS
EA	EACH
EL	ELEVATION
ELEV	ELEVATOR
EMBED	EMBEDMENT
EN	END NAILING
ENGR	ENGINEER
EOR	ENGINEER OF RECORD
EQ	EQUAL
EQUIV	EQUIVALENT
EA FACE	EACH FACE
EA SIDE	EACH SIDE
EA WAY	EACH WAY
(E)	EXIST, EXISTING
ESR	ICC EVALUATION SERVICE REPORT
EXP	EXPANSION
EXT	EXTERIOR
FDN	FOUNDATION
FF	FINISH FLOOR
FFE	FINISH FLOOR ELEVATION
FOC	FACE OF CONCRETE
FOM	FACE OF MASONRY
FOS	FACE OF STUD
FS	FAR SIDE
FT	FEET
FTG	FOOTING
FT-LB	FOOT POUNDS
GA	GAGE
GALV	GALVANIZED
GC	GENERAL CONTRACTOR
GL	GLUE LAMINATED
GLB	GLUE LAMINATED BEAM
GR	GRADE
GT	PRE-ENGINEERED GIRDER TRUSS
GWB	GYPSUM WALL BOARD
HGR	HANGER
HDR	HEADER
HF	HEM-FIR
HSS	HOLLOW STRUCTURAL STEEL
HT	HEIGHT
HORIZ	HORIZONTAL
IBC	INTERNATIONAL BUILDING CODE
ICF	INSULATED CONCRETE FORM
IN	INCHES
INT	INTERIOR
JST	JOIST
JT	JOINT
K	KIPS = 1000 LBS
KSI	KILOPOUNDS PER SQUARE INCH
L	ANGLE
LBS	POUNDS
LVL	LEVEL
LVL	LAMINATED VENEER LUMBER
L&I	LABOR & INDUSTRIES DEPARTMENT
LLH	LONG LEG HORIZONTAL
LLV	LONG LEG VERTICAL
LOC	LOCATE, LOCATION
LONGIT	LONGITUDINAL
LSL	LAMINATED STRAND LUMBER
MB	MACHINE BOLT
MECH	MECHANICAL
MTL	METAL
MFR	MANUFACTURER
MIN	MINIMUM
MC	MOISTURE CONTROL
MPH	MILES PER HOUR
NS	NEAR SIDE
NDS	NATIONAL DESIGN SPECIFICATION FOR WOOD CONSTRUCTION
NTS	NOT TO SCALE
NWT	NORMAL WEIGHT
OC	ON CENTER
OPP	OPPOSITE HAND
PAF	POWDER ACTUATED FASTENER
PC	PRE-CAST
PCF	POUNDS PER CUBIC FOOT
PERP	PERPENDICULAR
PL	PLATE
PLF	POUNDS PER LINEAR FOOT
PNL	PANEL
PRE-ENG	PRE-ENGINEERED
PSF	POUNDS PER SQUARE FOOT
PSI	POUNDS PER SQUARE INCH
PSL	PARALLEL STRAND LUMBER
PW	PLYWOOD
REF	REFERENCE
REINF	REINFORCEMENT
REQ'D	REQUIRED
RT	PRE-ENGINEERED ROOF TRUSS
SBC	SEATTLE BUILDING CODE
SCHED	SCHEDULE
SDI	STEEL DECK INSTITUTE
SDCI	SEATTLE DEPARTMENT OF CONSTRUCTION & INSPECTIONS
SER	STRUCTURAL ENGINEER OF RECORD
SF	SQUARE FEET
SHTG	SHEATHING
SIM	SIMILAR
SIMP	SIMPSON STRONG-TIE
SOG	SLAB ON GRADE
SPCG	SPACING
SRC	SEATTLE RESIDENTIAL CODE
SS	STAINLESS STEEL
STD	STANDARD
STIFF	STIFFENER
STRUC	STRUCTURAL
SW	SHEAR WALL
SQ	SQUARE
T&G	TONGUE AND GROOVE
THK	THICK
THRD	THREADED
TMS	THE MASONRY SOCIETY
T&B	TOP & BOTTOM
TO	TOP OF
TOC	TOP OF CONCRETE
TOS	TOP OF STEEL
TRANSV	TRANSVERSE
TRTD	TREATED
TS	TUBE STEEL
TYP	TYPICAL
UNO	UNLESS NOTED OTHERWISE
VERT	VERTICAL
VIF	VERIFY IN FIELD
WABO	WASHINGTON ASSOCIATION OF BUILDING OFFICIALS
W	WIDE
w/	WITH
w/o	WITHOUT
WF	WIDE FLANGE
WHS	WELDED HEADED STUD
WTS	WELDED THREADED STUD
WWF	WELDED WIRE FABRIC

AXONOMETRIC PROJECTION

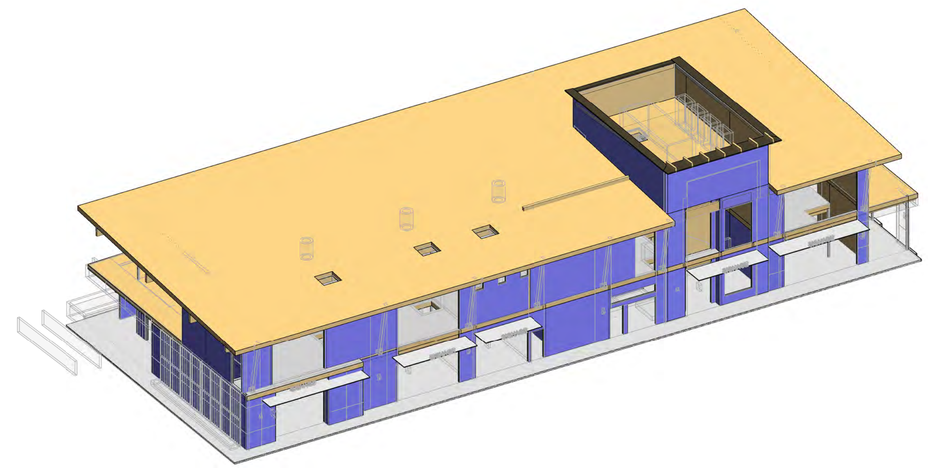

GRAPHIC SYMBOL LEGEND

- CONCRETE WALL (ABOVE)
- CONCRETE WALL (BELOW)
- CMU WALL (ABOVE)
- CMU WALL (BELOW)
- WOOD/CFS SHEAR WALL (ABOVE)
- WOOD/CFS STUD WALL (ABOVE)
- WOOD/CFS STUD WALL (BELOW)
- CONCRETE COLUMN (ABOVE)
- CONCRETE COLUMN (BELOW)
- WOOD POST (ABOVE)
- WOOD POST (BELOW)
- STEEL HSS COLUMN (ABOVE)
- STEEL HSS COLUMN (BELOW)
- STEEL WIDE FLANGE COLUMN (ABOVE)
- STEEL WIDE FLANGE COLUMN (BELOW)
- BEAM/JOIST
- BRACED FRAME BEAM
- GRID LINE
- CENTERLINE
- CONCRETE BY OTHERS (CUT)
- GRAVEL (CUT)
- EARTH (CUT)
- HDU# — SIMPSON TENSION TIE HOLDOWN
- #K+#T — NUMBER OF KINGS PLUS TRIMMERS
- JOIST SPAN w/ HANGER
- JOIST SPAN
- DECK SPAN
- EXTENT
- OVERFRAMING
- BLOCKED DIAPHRAGM
- C# — CONCRETE COLUMN TYPE
- SURFACE SLOPE PER ARCHITECT
- DETAIL REFERENCE NO. / # / S#.## / SHEET REFERENCE NO. — SECTION CALLOUT
- DETAIL REFERENCE NO. / # / S#.## / SHEET REFERENCE NO. — ELEVATION CALLOUT
- DETAIL REFERENCE NO. / # / S#.## / SHEET REFERENCE NO. — DETAIL CALLOUT
- HIGH SIDE — FOOTING STEP

AXONOMETRIC PROJECTION DISCLAIMER:

1. 3D VIEWS INCLUDING AXONOMETRIC PROJECTIONS, PERSPECTIVES, ETC, ARE PROVIDED FOR REFERENCE PURPOSES ONLY. IN THE EVENT OF ANY DISCREPANCIES BETWEEN INFORMATION REPRESENTED BY BOTH A 3D VIEW AND A NON-3D VIEW WITHIN THE CONSTRUCTION DOCUMENTS, THE NON-3D VIEW SHALL GOVERN IN ALL CASES.
2. INFORMATION REPRESENTED BY 3D VIEWS, BUT NOT REPRESENTED ELSEWHERE IN THE CONSTRUCTION DOCUMENTS IS NOT INTENDED TO BE PART OF THE CONSTRUCTION DOCUMENTS.

SHEET INDEX

SHEET NUMBER	SHEET NAME
S-001	STRUCTURAL TITLE SHEET
S-002	STRUCTURAL GENERAL NOTES
S-003	STRUCTURAL GENERAL NOTES
S-004	STRUCTURAL GENERAL NOTES
S-121	FIRST FLOOR FOUNDATION PLAN
S-122	SECOND FLOOR FRAMING PLAN
S-123	ROOF FRAMING PLAN
S-124	MECHANICAL WELL TOP OF FRAMING PARTIAL PLAN
S-301	STRUCTURAL CONCRETE DETAILS
S-302	STRUCTURAL CONCRETE DETAILS
S-501	STRUCTURAL STEEL DETAILS
S-502	STRUCTURAL STEEL DETAILS
S-601	STRUCTURAL WOOD DETAILS
S-602	STRUCTURAL WOOD DETAILS
S-603	STRUCTURAL WOOD DETAILS
S-604	STRUCTURAL WOOD DETAILS
S-605	STRUCTURAL WOOD DETAILS
S-606	STRUCTURAL WOOD DETIALS

bcra
T 253.627.4367 F 253.627.4395 WWW.BCRADESIGN.COM
2106 PACIFIC AVENUE, SUITE 300, TACOMA, WA 98402

SEAL

FOR COORDINATION

LUND OPSAHL
1215 Fourth Avenue, Suite 1200
Seattle, Washington 98161
206-402-5156 www.lundopsahl.com

PROJECT
PORT OF EVERETT
WINE WALK BUILDING A12
XXXX SEINER DRIVE
EVERETT, WASHINGTON 98201

REVISIONS

DATE 12/13/2023
BCRA NO. 23045.00.00
DRAWN BY: JK
REVIEWED BY:
SHEET TITLE STRUCTURAL TITLE SHEET

bcra
© COPYRIGHT 2023 - BCRA, INC. ALL RIGHTS RESERVED

SHEET
S-001

100% DD Set

22x34 12/13/2023 1:20:25 PM

IF SHEET MEASURES LESS THAN 22"X34", IT IS A REDUCED PRINT. REDUCE SCALE ACCORDINGLY

GENERAL REQUIREMENTS

SUMMARY OF WORK
Project consists of new construction as shown on these Contract Documents used in coordination with the Architectural and other discipline's documents.

GOVERNING CODE
All design and construction shall conform to the 2021 International Building Code and local jurisdiction amendments.

Reference to ASTM and other standards shall refer to the latest edition designated by IBC Chapter 35. Refer to the specifications for information in addition to that covered by these structural notes and drawings.

DOCUMENTS
Structural Documents shall be used in conjunction with Architectural Documents for all bidding and construction.

Drawings indicate general and typical details of construction. Typical details and general notes shall apply even if not specifically denoted on plans, UNO. Where conditions are not specifically indicated similar details of construction shall be used, subject to review and approval by the Architect and the SER.

Existing structural information, designated as (E) on the Structural drawings, has been compiled from information furnished by various sources and is not necessarily field-verified by the Engineer. Dimensions relating to existing structures are intended for use as guidelines only; all dimensions shall be field-verified by the contractor prior to start of construction. Notify the Architect of any discrepancies.

These Contract Documents and any materials used in preparation of them, including calculations, are the exclusive property of the SER and can be reproduced only with the permission of the SER.

WARRANTY
The SER has used that degree of care and skill ordinarily exercised under similar circumstances by members of the profession in this locale and no other warranty, either expressed or implied, is made in connection with rendering professional services.

OWNER RESPONSIBILITY
The Owner shall retain a Special Inspector to perform the special inspection requirements required by the building official and as outlined in the Special Inspection section below.

DESIGN CRITERIA

BUILDING CATEGORY
Structural Risk Category II
Importance factors for snow and seismic are listed with the loading criteria.

LIVE LOADS - FLOOR AND ROOF
Live loads indicated with * are reducible per IBC
Partition loading has been added per IBC

Stores:	
Retail first floor	100 psf
Retail upper floors	100 psf
Concentrated load (all conditions)	1,000 lbs
Storage:	
Light storage	125 psf
Miscellaneous:	
Marquees	75 psf
Guardrails/balcony rails	50 plf
Mechanical equipment	weights furnished by manufacturer

LIVE LOADS - SNOW
Numbering below is per IBC Section 1603.1.3:
1. Flat-Roof Snow Load: P_f = 15 psf
2. Snow Exposure Factor: C_e = 1.2
3. Snow Importance Factor: I_s = 1.0
4. Thermal Factor: C_t = 1.1

Additional Items:
Ground Snow Load: P_g = 15 psf
Snow drifting load per IBC w/ ground snow load
Minimum uniform roof snow load = 25 psf

LATERAL LOADS - WIND
Numbering below is per IBC Section 1603.1.4:
1. Ultimate Design Wind Speed (3-second gust): V_{ult} = 98 mph
   Nominal Design Wind Speed: V_{asd} = 76 mph
2. Risk Category: II
3. Wind Exposure: D
4. Internal Pressure Coefficient = +/- 0.18
5. Components and Cladding:
   The following working loads may be used in lieu of calculations (zones per ASCE 7-16 Table 30.6-2) :

TABLE 30.6-2

Location	Zone	Pressure (PSF) (100 Sq Ft)	
		Service	Ultimate
Roof	1'	-29.0 / +10.0	-47.9 / +16.0
	1	-29.0 / +10.0	-47.9 / +16.0
	2	-30.0 / +10.0	-50.3 / +16.0
	3	-30.0 / +10.0	-50.3 / +16.0
Walls	4	-14.4 / +13.0	-24.0 / +21.8
	5	-16.0 / +13.0	-26.6 / +21.8

Additional Info:
6. Topographic Factor: K_{zt} = 1.0
7. Directionality Factor: K_d = 0.85
8. Ground Elevation Factor: K_e = 1.0
9. Enclosure classification: Enclosed
10. Gust Effect Factor: G = 0.85
11. Design Base Shear: V = 116 kips (N-S); 40 kips (E-W)
12. Analysis Procedure: Directional

DESIGN CRITERIA (cont'd)

LATERAL LOADS - EARTHQUAKE
Numbering below is per IBC Section 1603.1.5:
1. Risk Category: II
2. Seismic Importance Factor: I_e = 1.0
3. Mapped Spectral Response Acceleration Parameters: S_s = 1.226 g; S_1 = 0.436 g
4. Site Class: D; F_A = 1.20; F_V = 1.86
5. Design Spectral Response Acceleration Parameters: S_{DS} = 0.981 g; S_{D1} = 0.542 g
6. Seismic Design Category: D
7. Basic Seismic Force-Resisting Systems:
   Vertical Elements: Plywood-sheathed wood shear walls;
   Diaphragms: Plywood-sheathed flexible diaphragm;
8. Design Base Shear: 115 kips
9. Seismic Response Coefficient: C_S = 0.151
10. Response Modification Coefficient: R = 6.5
11. Analysis Procedure: Equivalent Lateral Force Procedure

Additional Items:
Building Location: 47.997° N, 122.216° W
Building Height = 30 feet
Redundancy Factors:
North/South Direction = 1.0 kips
East/West Direction = 1.0 kips

CONTRACTOR PERFORMANCE REQUIREMENTS

DESIGN DOCUMENTS
Contractor shall verify all dimensions and all conditions at the job site, including building and site conditions before commencing work, and be responsible for same. All discrepancies shall be reported to the Architect before proceeding with work. Any errors, ambiguities and/or omissions in the contract documents shall be reported to the Architect immediately, in writing. No work is to be started before correction is made.

Contractor shall verify and/or coordinate all dimensioned openings and slab edges shown on the contract documents. Some dimensions, openings and embedded items are shown on the Structural drawings. Others may be required. Refer to Architectural drawings for size and location of curbs, equipment pads, wall and floor openings, Architectural treatment, embeds required for architectural items and dimensions. Refer to mechanical, plumbing, electrical and fire protection drawings for size and location of all openings for ducts, piping, conduits, etc. Submit openings to Architect for review.

Do not scale drawings. Use only field verified dimensions. When electronic plan files are provided for the Contractor's detailing convenience, it shall be noted that the electronic files are not guaranteed to be dimensionally accurate. The Contractor uses them at their own risk. The published paper documents are the controlling Contract Documents. Electronic files of detail sheets and notes will not be provided.

CONTRACTOR-INITIATED CHANGES
Contractor-initiated changes shall be submitted in writing to the Architect for review and acceptance prior to fabrication or construction. Changes shown on shop drawings only will not satisfy this requirement.

INSPECTIONS
The Contractor shall coordinate with the building department for all building department required inspections.

TEMPORARY SHORING AND BRACING
The Contractor shall provide temporary bracing as required until all permanent connections and stiffening have been installed. The Contractor is responsible for the strength and stability of all partially completed structures including but not limited to concrete or masonry walls, steel framing and erection aids. The Contractor shall, at their discretion, employ the aid of a licensed Structural Engineer to design all temporary bracing and shoring necessary to complete the work described in these contract documents. The Contractor shall be responsible for all required safety standards, safety precautions and the methods, techniques, sequences or procedures required in performing their work. For concrete construction refer to ACI 318 - Section 26.11.2 "Removal of Formwork".

SAFETY PROCEDURES
Contractor shall be responsible for all safety precautions and the methods, techniques, sequences or procedures required to perform the contractor's work. The Structural Engineer has no overall supervisory authority or actual and/or direct responsibility for the specific working conditions at the site and/or for any hazards resulting from the actions of any trade contractor. The Structural Engineer has no duty to inspect, supervise, note, correct, or report any health or safety deficiencies to the Owner, Contractors, or other entities or persons at the project site.

BUILDING MOVEMENT

All non-structural wall connections shall account for construction tolerances, column shortening and beam deflections. In addition, all design components shall accommodate a typical vertical movement at each floor of 3/4" due to variable live loading. This displacement will occur at the free end of cantilever beams and at midspan of simple span beams. Non-structural walls shall accommodate typical lateral movements of 1/2" between adjacent floors perpendicular and/or parallel to the wall.

Wall attachments shall not apply any lateral loads to the bottom flange of beams. If attachment is made to the bottom of beams, additional inclined struts bracing the bottom flange or other equivalent means to counteract this force shall be provided by the Contractor.

SHOP DRAWINGS AND SUBMITTALS

SHOP DRAWING & SUBMITTAL REVIEW (including Deferred Structural Components)
The contractor must review and stamp the shop drawings & submittals for review. SER will only review submittals for items shown on SER documents. Submittals for Deferred Structural Components will receive cursory review by SER for loads imposed on primary structure. SER will review shop drawings for general conformance with design concept of the project and general compliance with the information given in the Structural Contract Documents. Review of submittals does not constitute approval or acceptance of unauthorized deviation from Contract Documents.

Corrections or comments made on shop drawings during this review do not relieve Contractor from compliance with the requirements of the plans and specifications.

Contractor responsible for:
- Reviewing, approving, stamping and signing submittals prior to submittal to Architect and SER
- Timing submittals to allow two weeks of review time for the SER and time for corrections and/or resubmittal
- Conformance to requirements of the Contract Documents
- Dimensions and quantities
- Verifying information to be confirmed or coordinated
- Information solely for fabrication, safety, means, methods, techniques and sequences of construction
- Coordination of all trades

Resubmittals shall be clouded and dated for all changes to the submittal. Only clouded portions of resubmittal will be reviewed and SER's review stamp applies to only these areas.

SUBSTITUTIONS
Substitutions shall be submitted in writing prior to submittal of shop drawings. Shop drawings bearing substitutions will be rejected. Submit engineering data to substantiate the equivalence of the proposed items. The SER's basic services contract does not include review of substitutions that require re-engineering of the item or adjacent structure. Nor does the SER's contract cover excessive review of proposed substitutions. The fees for making these reviews and/or redesign shall be paid by the Contractor. Reviews and approvals shall not be made until authorization is received.

SHOP DRAWINGS AND SUBMITTALS (cont'd)

SUBMITTALS
Shop drawings and material submittals shall be submitted to the Architect and SER prior to any fabrication or construction for the following structural items. Submittals shall include one reproducible and one copy; reproducible will be marked and returned. If deviations, discrepancies, or conflicts between shop drawings submittals and the contract documents are discovered either prior to or after shop drawing submittals are processed by the SER, the Contract Documents control and shall be followed.

- Construction sequence description
- Contractor quality control testing procedures when required in specifications
- Concrete mix designs
- Concrete construction control joint plans and elevations
- Concrete accessories material specification, size and location
- Reinforcing bar shop drawings and placing plans
- Reinforcing bar mill certificates shall be available upon request
- Non-shrink grout material specifications and manufacturer's installation recommendations
- Fabrication shop AISC Certification
- Structural steel registration/certification or quality control inspection records
- Structural steel shop and erection drawings
- Welding Procedure Specifications
- Glued laminated members (certificates shall be on site and be available upon request)
- Engineered wood beams (certificates shall be on site and be available upon request)
- Deferred Structural Components listed below
- Certificate of conformance for welding material, including supplemental notch toughness requirements

DEFERRED STRUCTURAL COMPONENTS
Components referred to as Deferred Structural Components shall comply with these notes. These elements have not been permitted under the base building application. The Contractor will be required to submit the component system documents to the building official for approval. The documents shall be stamped and signed by an Engineer licensed by the state where the project is located. The deferred structural components shall not be installed until the design and submittal documents have been approved by the building official.

Prior to building department submittal, the deferred structural components submittals shall receive cursory review by SER for loads imposed on primary structure and general conformance with design concept of the project and general compliance with the information given in the Structural Contract Documents. Review of submittals does not constitute approval or acceptance of unauthorized deviation from Contract Documents. Submittals of contractor-designed components shall include the designing professional engineer's stamp and signature, as noted above. The submittal shall be approved by the component vendor prior to review by the SER. The designing professional is responsible for code conformance and all necessary connections not specifically called out on Architectural or structural contract documents.

Submittals shall include details of connections to primary structure that indicate magnitude and direction of all loads imposed at point of connection. Design criteria shall be provided with submittal and calculations shall be made available upon request.

The following list includes the items that are defined as Deferred Structural Components. Refer to other discipline's contract documents for additional deferred components that may require structural design and details. Connections of these elements shall not induce torsion on structural members. Deferred Structural Components shall be manufactured, delivered, handled, stored, and field erected in conformance with instructions prepared by the component vendor.

Deferred structural components:
- Exterior wall system support
- Light-gage metal stud systems
- Plywood web joists
- Elevator guide rail systems
- Metal or precast stairs and landings
- Handrails, guards, grab bars, and wall mounted shower seats
- Marquees and canopies, unless detailed on Contract Documents
- Fall-restraint systems

INSPECTIONS & STRUCTURAL OBSERVATIONS

INSPECTIONS BY BUILDING OFFICIAL
The building official, upon notification, shall make structural inspections as required by local ordinance. The inspection by the building official per IBC Section 110 will be separate from, and in addition to, the structural observation(s) and special inspection(s) mentioned subsequently.

STRUCTURAL OBSERVATION
Where required by IBC Section 1704.6 the owner or the owner's authorized agent shall employ a structural observer to perform structural observations. Structural observation does not include or waive the responsibility for inspections or special inspections required by the building code and mentioned herein. The structural observer shall be one of the following individuals: the SER, or a registered design professional designated by the SER.

At the conclusion of the work included in the permitted contract documents, the structural observer shall submit to the building official a written statement that the site visits have been made and shall identify any reported deficiencies that, to the best of the structural observer's knowledge, have not been resolved.

The following list includes the items requiring Structural Observation:

FOUNDATIONS:
- Concrete foundations reinforcement prior to concrete placement

STEEL:
- Steel floor framing

WOOD:
- Wood shear walls (hardware and nailing installed) prior to finishes installed
- Wood floor and roof framing prior to finishes installed (including drag beam connections)
- Diaphragms (sheathing, fasteners, and hardware installed) prior to floor and ceiling finishes installed

OTHER:
- Attachment of cladding/exterior framing at foundation level, slab/floor edge, and roof deck edge

SPECIAL INSPECTIONS
A Special Inspector shall be hired by the Owner to perform the following special inspections per IBC Section 1704. See the specifications for additional requirements for special inspection and testing. The architect, Structural Engineer, and building department shall be furnished with copies of all inspection reports and test results.

Each contractor responsible for the construction of a seismic force resisting system, designated seismic system, or component listed in the statement of special inspections shall submit a written statement of responsibility to the building official and the Owner prior to the commencement of work on the system or component. The written statement shall be in accordance with IBC Section 1704.4.

See IBC Chapter 17: "Special Inspections and Tests" for more detailed requirements.

INSPECTIONS & STRUCTURAL OBSERVATIONS (cont'd)

SPECIAL INSPECTIONS OF ARCHITECTURAL COMPONENTS (PER IBC 1705.11.3, 1705.12.5 & 1705.12.7)

Verification and Inspection	Frequency		Reference
	Cont.	Periodic	
Roof and wall cladding		X	IBC 1705.11.3
Erection and fastening of exterior cladding or interior and exterior veneers		X	IBC 1705.12.5
Erection and fastening of interior and exterior non-bearing walls		X	IBC 1705.12.5
Access floors		X	IBC 1705.12.5.1

SPECIAL INSPECTIONS OF MECHANICAL & ELECTRICAL COMPONENTS (PER IBC 1705.12.4 & 1705.12.6)

Verification and Inspection	Frequency		Reference
	Cont.	Periodic	
Anchorage of emergency or standby power systems		X	IBC 1705.12.6.1
Anchorage of electrical equipment not part of emergency or standby power systems		X	IBC 1705.12.6.2
Installation of piping systems carrying hazardous materials and their associated mechanical units		X	IBC 1705.12.6.3
Installation of vibration isolation systems having a clearance of less than 1/4 inch between the equipment support frame and restraint		X	IBC 1705.12.6.5
Designated seismic systems		X	IBC 1705.12.4

SPECIAL INSPECTIONS AND TESTS OF SOILS (PER IBC 1705.6)

Verification and Inspection	Frequency		Reference
	Cont.	Periodic	
Verify materials below shallow foundations are adequate to achieve the design bearing capacity		X	
Verify that excavations are extended to proper depth and have reached proper material		X	
Perform classification and testing of compacted fill materials		X	
Verify use of proper materials, densities and lift thicknesses during placement and compaction of compacted fill	X		
Prior to placement of compacted fill, observe subgrade and verify that site has been prepared properly		X	

SPECIAL INSPECTIONS OF WOOD CONSTRUCTION (PER IBC 1705.5 & 1705.12.2)

Verification and Inspection	Frequency		Reference
	Cont.	Periodic	
Moisture content of wood-framed construction at time of cover		X	Refer to general notes
Nailing, bolting, anchoring and other fastening of components (spaced 4" oc or closer) within the seismic force resisting system, including drag struts, braces, holdowns, shear walls, and diaphragms		X	1705.12.2.2 1705.5.1
Field gluing operations of elements within the seismic, force resisting system	X		1705.12.2.1
Inspection of metal-plate-connected wood truss fabricator's quality control procedures		X	1704.2.5 TPI 1 Section 2.3.6.11

SPECIAL INSPECTIONS AND TESTS OF CONCRETE CONSTRUCTION (PER IBC 1705.3)

Verification and Inspection	Frequency		Reference
	Cont.	Periodic	
Inspect reinforcement and verify placement		X	IBC 1908.4 ACI 318: 20, 25.2-3, 26.6.1-3
Reinforcing bar welding:			
• Verify weldability of reinforcing bars other than ASTM A706		X	AWS D1.4
• Inspect single-pass fillet welds, maximum 5/16"		X	ACI 318: 26.6.4
• Inspect all other welds	X		
Inspection of anchors cast in concrete		X	ACI 318: 17.8.2
Inspection of anchors and reinforcing bar post-installed in hardened concrete members:			
• Adhesive anchors installed in horizontally or upwardly inclined orientations to resist sustained tension loads	X		ACI 318: 17.8.2.4
• Mechanical anchors, adhesive anchors and reinforcing bar not defined above		X	ACI 318: 17.8.2
Verifying use of required design mix		X	IBC 1904.1, 1904.2, 1908.2-3, ACI 318: 19, 26.4.3, 26.4.4
Prior to concrete placement, fabricate specimens for strength tests, perform slump and air content tests, and determine the temperature of the concrete	X		IBC 1908.10 ACI 318: 26.4, 26.12 ASTM C172, C31
Inspection of concrete and shotcrete placement for proper application techniques	X		IBC 1908.6-8 ACI 318: 26.5
Verify maintenance of specified curing temperature and techniques		X	IBC 1908.9 ACI 318: 26.5.3-5
Inspect formwork for shape, location and dimensions of the concrete being formed		X	ACI 318: 26.11.1.2(b)
Inspection of mechanical splicing of reinforcing bars	X		ICC report for specified product

bcra
T 253.627.4367 F 253.627.4365 WWW.BCRADESIGN.COM
2106 PACIFIC AVENUE, SUITE 300, TACOMA, WA 98402

SEAL

FOR COORDINATION

LUND OPSAHL
1215 Fourth Avenue, Suite 1200
Seattle, Washington 98161
206-402-5156 www.lundopsahl.com

PROJECT
PORT OF EVERETT
WINE WALK BUILDING A12
XXXX SEINER DRIVE
EVERETT, WASHINGTON 98201

REVISIONS

DATE
12/13/2023
BCRA NO.
23045.00.00
DRAWN BY: JK
REVIEWED BY:
SHEET TITLE
STRUCTURAL GENERAL NOTES

bcra
© COPYRIGHT 2023 - BCRA, INC. ALL RIGHTS RESERVED
SHEET
S-002
100% DD Set

IF SHEET MEASURES LESS THAN 22"X34", IT IS A REDUCED PRINT. REDUCE SCALE ACCORDINGLY

INSPECTIONS & STRUCTURAL OBSERVATIONS (cont'd)

SPECIAL INSPECTIONS OF STRUCTURAL STEEL CONSTRUCTION OTHER THAN SEISMIC LATERAL FORCE RESISTING SYSTEMS (PER IBC 1705.2.1)

Verification and Inspection	QC	QA	Reference
Inspection tasks during welding of structural steel:			AISC 360-N5.4-2 AWS D1.1
Control and handling of welding consumables • Packaging • Exposure Control	O	O	
No welding over cracked weld tabs	O	O	
Environmental Conditions • Wind speed within limits • Precipitation and temperature	O	O	
WPS followed • Settings on welding equipment • Travel speed • Selected welding materials • Selected welding materials • Shielding gas type/flow rates • Interpass temperature maintained (min./max.) • Proper position (F,V,H,OH)	O	O	
Welding techniques • Interpass and final cleaning • Each pass within profile limitations • Each pass meets quality requirements	O	O	
Placement and installation of steel headed stud anchors	P	P	
Inspection tasks after welding of structural steel:			AISC 360-N5.4-3 AWS
Welds cleaned	O	O	
Size, length and location of welds	P	P	
Welds meet visual acceptance criteria • Crack prohibition • Weld/base-metal fusion • Crater cross section • Weld Profiles • Weld Size • Undercut • Porosity	P	P	
Arc Strikes	P	P	
k-area - when welding of doubler, continuity, or stiffener plates has been performed in k-area, visually inspect the web k-area for cracks within 3" of the weld	P	P	
Weld acess holes in rolled heavy shops and built-up heavy shapes	P	P	
Backing removed and weld tabs removed (if required)	P	P	
Repair activities	P	P	
Document acceptance or rejection of welded joint or member	P	P	
No prohibited welds have been added without the approval of the EOR	O	O	
Inspection of bolting of structural steel			AISC 360-N5.6
Inspection tasks prior to bolting (tension-controlled/slip-critical bolts only):			
Manufacturer's certifications available for fastener materials	O	P	
Fasteners marked in accordance with ASTM requirements	O	O	
Correct fasteners selected for the joint detail	O	O	
Correct bolting procedure for joint detail	O	O	
Connection elements, inclduing the appropriate faying surface condition and hole preparation, if specified, meet applicability requirements	O	O	
Pre-installation verification testing by installation of personnel observed and documented for fastener assemblies and methods used	P	O	
Protected storage provided for bolts, nuts, washers, and other fastener components	O	O	
Inspection tasks during bolting (tension-controlled/slip-critical bolts only):			
Fastener assemblies placed in all holes and washers and nuts are positioned as required	O	O	
Joint brought to the snug-tight condition prior to the pretensioning operation	O	O	
Fastener component not turned by the wrench prevented from rotation	O	O	
Fasteners are pretensioned in accordance with the RCSC Specification	O	O	
Inspection tasks after bolting:			
Document acceptance or rejection of bolted connections	P	P	

P - Perform O - Observe

INSPECTIONS & STRUCTURAL OBSERVATIONS (cont'd)

SPECIAL INSPECTIONS OF STRUCTURAL STEEL CONSTRUCTION OTHER THAN SEISMIC LATERAL FORCE RESISTING SYSTEMS (PER IBC 1705.2.1) (Cont'd)

Verification and Inspection	QC	QA	Reference
Inspection of fabricator's quality control procedures	P	P	IBC 1704.2.5 AISC 360-N.2
Review of material test reports and certifications listed in AISC Section N3.2	P	P	AISC 360-N.5.2 AWS D1.1
Inspect the fabricated steel or erected steel frame to verify compliance with the details shown on the construction documents	P	P	AISC 360-N.5.8
Inspection during the placement of anchor rods and other emebedments supporting structural steel	O	O	AISC 360-N.5.8
Inspection of composite construction, including placement of steel deck and steel headed stud anchors	O	O	SDI QA/QC - 2011
Non-destructive testing of welded joints			AISC 360-N5.5 AWS D1.1
Inspection of welding of structural steel			AISC 360-N5.4-1 AWS D1.1
Inspection tasks prior to welding of structural steel:			
Welder qualification records and continuity records	P	O	
WPS available	P	P	
Manufacturer certifications for welding consumables available	P	P	
Material identification (type/grade)	O	O	
Welder identification system	O	O	
Fit-up of groove welds (including joint geometry) • Joint preparations • Dimensions (alignment, root opening, root face, bevel) • Cleanliness (condition of steel surfaces) • Tacking (tack weld quality and location) • Backing type and fit (if applicable)	O	O	
Fit-up of CJP groove welds of HSS T-, Y-, and K-joints without backing (including joint geometry) • Joint preparations • Dimensions (alignment, root opening, root face, bevel) • Cleanliness (condition of steel surfaces) • Tacking (tack weld quality and location)	P	O	
Configuration and finish of access holes	O	O	
Fit-up of fillet welds • Dimensions (alignment, gaps at root) • Cleanliness (condition of steel surfaces) • Tacking (tack weld quality and location)	O	O	
Check welding equipment	O	-	

P - Perform O - Observe

GEOTECHNICAL

REPORT & GENERAL CRITERIA
Criteria outlined in the report listed below was used for the design of the foundations:
GEOTECHNICAL ENGINEERING AND GROUND IMPROVEMENT DESIGN SERVICES (DRAFT)
prepared by GEOENGINEERS (08/16/2023)

Contractor shall be familiar with recommendations in the above-mentioned report prior to start of construction. Allowable soil pressure and lateral earth pressure are assumed and therefore must be verified by a Geotechnical Inspector or the building official. If soils are found to be other than assumed, notify the Structural Engineer for possible foundation redesign. For wet weather work, see the Geotechnical Report.

Unless noted otherwise, footings shall be centered below columns or walls.

INSPECTIONS
All prepared soil-bearing surfaces shall be inspected by the Owners Geotechnical Inspector (or building official) prior to placement of reinforcing steel and concrete. Inspections shall be made per IBC Table 1705.6.

BEARING VALUES
All footings shall bear on undisturbed soil and shall be lowered to firm bearing if suitable soil is not found at elevations shown. Exterior footings shall bear a minimum of 18" below the finished ground surface. Footing elevations shown on plans (or in details) are minimum depths and for guidance only; the actual elevations of footings must be established by the Contractor in the field working with the Geotechnical Inspector.

Allowable vertical bearing soil pressure = 3,000 psf

SUBGRADE PREPARATION
Prepare subgrade per the Geotechnical Report, summarized as follows: All footings shall be cast on undisturbed firm natural soils that are free of organic materials. Footing excavation shall be free of loose soils, sloughs, debris and free of water at all times. If organic silt and/or fill material is encountered at subgrade elevations, overexcavate a minimum of 2'-0" below the design foundation subgrade elevation prior to placing footings. The overexcavated areas shall be backfilled with structural fill compacted to 95% proctor per ASTM D-1557 or a lean concrete mix.

EXISTING UTILITIES
The Contractor shall determine the location of all adjacent underground utilities prior to any excavation, shoring, pile driving, or pier drilling. Any utility information shown on the plans and details are approximate and not verified by the SER. Contractor is to provide protection of any utilities or underground structures during construction.

DRAINAGE
Drainage systems, including foundation, roof and surface drains, shall be installed as directed by the Geotechnical Report. Vapor retarder placed below slab-on-grade shall conform to ASTM E 1643 and ASTM E 745.

RETAINING WALLS
Grade on either side of concrete walls shall not vary by more than 12", UNO. Slope of backfill shall not exceed 2H to 1V, UNO. Backfill behind all retaining walls with free draining, granular fill installed per the Geotechnical Report. Provide for subsurface drainage. Design pressures used for the design of retaining walls are based on drained conditions.

Active earth pressure (restrained/unrestrained) = 55/35 PCF
Passive earth pressure = 230 PCF
Coefficient of friction (factor of safety of 1.5 included) = 0.52

Provide temporary shoring for tops of walls if backfill is placed prior to the supporting structure being constructed. Supporting structure is the floor framing and sheathing completely installed and attached to perpendicular walls.

CONCRETE

CAST-IN-PLACE CONCRETE
Concrete materials shall conform to the following:

Portland cement:	Type 1, ASTM C150
Fly ash (if used):	ASTM C618 class F or C
Slag cement (if used):	ASTM C989
Lightweight aggregates:	lightweight aggregates shall not be used without prior approval of SER and building department
Normal weight aggregates:	ASTM C33
Sand equivalent:	ASTM C33
Water:	Potable per ASTM C94
Air entraining admixtures:	ASTM C260
Chemical admixtures:	ASTM C494
Flowable concrete admixtures:	ASTM C1017

Durability requirements of concrete mixes shall conform to building code. These requirements include water-cementitious material ratios, minimum compressive strengths, air entrainment, type of cement, and maximum chloride ion content.

CONCRETE STRENGTH REQUIREMENTS TABLE

Location	Strength f'c (psi)	Max Agg Size	Max W/C Ratio	Total Air Content	Exposure Categories and Classes			
					F	S	W	C
Lean mix soil replacement under foundations	1,500	Sand	1.5 Sack Cement	-	F1	S0	W0	C1
Foundations and stem walls	4,000	1"	0.44	4.5%	F1	S0	W0	C1
Slab on grade (Exterior)	4,000	3/4"	0.40	6%	F2	S0	W0	C1
Slab on grade (Interior)	4,000	3/4"	0.44	1%	F0	S0	W0	C0

CONCRETE MIXTURES
Mixes shall be proportioned to meet compliance requirements of ACI 318 Section 26.4.3. Slump, W/C ratio, admixtures and aggregate size will be determined by the contractor. Submit documentation of concrete mixture characteristics for review by the SER before the mixture is used and before making changes to mixtures already in use. Documentation shall comply with ACI 318 Section 26.4.4.

All concrete, including slab on grade, shall contain an acceptable water-reducing admixture conforming to ASTM C494 and be used in strict accordance with the manufacturer's recommendations.

All concrete which is exposed to freezing and thawing in a moist condition or exposed to deicing chemicals shall contain an air entraining agent, conforming to ASTM C260. Total air content shall be adjusted per ACI 318 for mix designs with smaller nominal aggregate size. The amount of entrained air shall be measured at the discharge end of the placing nozzle. Entrained air shall be as noted ± 1.0% by volume. Air-entrainment shall not be used at slabs that will receive a smooth, dense, hard-troweled finish.

Trucks hauling plant-mixed concrete shall arrive on-site with a field ticket indicating the maximum gallons of water that can be added at the site not to exceed the total water content in the approved mix design.

Concrete shall be deposited as nearly as practicable in its final position to avoid segregation due to rehandling or flowing. Concrete shall be thoroughly consolidated by suitable means during placement and shall be thoroughly worked around reinforcement, embedded items, and into corners of forms.

FORMWORK AND ACCESSORIES
Concrete construction shall conform to ACI 301 "Specifications for Structural Concrete" and the Building Code, including testing procedures. See specifications and/or Architectural documents for formwork requirements. Installation shall adhere to ACI 301. Conduits and pipes of aluminum shall not be embedded in concrete construction.

See Architectural drawings for exact locations and dimensions of door and window openings in all concrete walls. See Mechanical drawings for size and location of mechanical openings through concrete walls. See Architectural drawings for all grooves, notches, chamfers, feature strips, color, texture, and other finish details at all exposed concrete surfaces, both cast-in-place and precast. See structural details for reinforcing around openings.

Contractor shall submit the proposed locations of construction joints to the Architect for acceptance before starting construction. Erico Lenton Formasaver (IAPMO-UES-ER-0129) may be used as an alternate to the roughened joint. All construction, control, and isolation joints for slabs on ground shall be in accordance with the typical details.

Concrete accessories and embedded items shall be coordinated with Architectural and all other Contract Documents and suppliers' drawings before placing concrete. Wet-setting of anchor rods, reinforcing, hardware, etc. is not allowed in concrete. Anchor rods, reinforcing, hardware, etc. shall be firmly tied in place prior to concrete placement.

Refer to Architectural documents for waterstops, damp proofing, and soil retaining wall drainage requirements at concrete and at concrete joints (construction joints, slab to wall joints, curb to slab joints, etc).

CURING AND FINISHES
Protect and cure freshly placed concrete per ACI 305.1 in hot conditions, ACI 306.1 in cold conditions, and ACI 308.1 " Specification for Curing Concrete". All exposed edges and corners shall have 3/4" chamfer, UNO. Concrete flatwork shall be sloped to provide positive drainage. Coordinate finish with Architectural contract documents.

At the time of application of finish materials or special treatment to concrete, moisture content of concrete shall conform to requirements in finish material specifications. Where vapor sensitive coverings are to be placed on slabs on grade, conform strictly to slab covering manufacturer's recommendations regarding vapor retarder and granular fill requirements below the slab.

CONCRETE CRACK MAINTENANCE
Cracking occurs in concrete structures due to inherent shrinkage, creep, and the restraining effects of walls and other structural elements. Most cracking due to shrinkage and creep will likely occur over the first two years of the life of the structure; further concrete movement due to variations in temperature may persist. Cracks that result in water penetration will need to be repaired to protect reinforcing. Other cracking may be repaired at the Owner's discretion for aesthetical reasons or performance of applied finishes. Prior to repairing cracks, a Structural Engineer should be consulted to provide direction on which cracks to repair and on whether observed cracks may affect the strength of the structure.

GROUTING STEEL BASE PLATES
Nonshrink grout for base plates shall be an approved nonshrink cementitious grout containing natural aggregates delivered to the job site in factory prepackaged containers requiring only the addition of water. The minimum 28-day compressive strength shall be at least 6000 psi, UNO. Grouts shall meet ASTM C1107. Approved grouts include: Master Builders' "Master Flow 713", Sika Corporation's "Sikagrout 212", Burke Company's "Nonferrous Nonshrink Grout", W.R. Meadows CG-86 Construction Grade Grout, or approved equal. Grout shall be mixed, applied, and cured strictly in accordance with the manufacturer's published recommendations.

REINFORCEMENT IN CONCRETE AND MASONRY

REINFORCING STEEL
Reinforcing steel shall conform to ASTM A615 (including supplement S1), Grade 60, Fy = 60,000 psi.

WELDED WIRE REINFORCING
Welded Wire Reinforcing (WWR) shall conform to ASTM A1064. Lap splice adjacent mats of welded wire fabric a minimum of 8" at sides and ends. In equipment pads, use minimum WWR 6x6-W2.1xW2.1, UNO.

PROCEDURES
Reinforcing steel shall be detailed (including hooks and bends) in accordance with ACI 315 "Details and Detailing of Concrete Reinforcement". Lap all reinforcement in accordance with "The Reinforcing Splice and Development Length Schedule" on these documents. If table is not provided, lap all reinforcing by 40 bar diameters. Provide corner bars at all wall and footing intersections.

Reinforcing steel shall be adequately supported to prevent displacement during concrete and grout placement. Bars shall be bent cold.

Bars partially embedded in concrete shall not be field bent, unless specifically so detailed or approved by the SER.

Mechanical connection of continuous reinforcing bar shall be used where shown on documents and may be substituted for lap splices if approved by the SER. Such connections shall develop at least 125% of the specified yield strength of the bar. Acceptable connectors shall be the Erico Lenton Standard Coupler (ER-0129), Dayton Superior Bar-Lock L Series (ER-0319), or approved equal.

Welding or tack welding of reinforcing bars to other bars or to plates, angles, etc, is prohibited, except where specifically approved by the SER. Where welding is approved, it shall be done by AWS/WABO-certified welders using E9018 or approved electrodes. Welding procedures shall conform to the requirements of AWS D1.4. Any Grade 60 reinforcing bars indicated on drawings to be welded shall conform to ASTM A706. Reinforcement complying with ASTM A615 (S1) may be welded only if material property reports indicating conformance with welding procedures specified in AWS D1.4 are submitted. Welding within 4" of cold bends in reinforcing steel is not permitted.

ANCHORAGE

Post-installed anchors or reinforcing bar shall not be installed without prior approval of Engineer of Record unless noted otherwise on the plans.

ADHESIVE ANCHORS
Adhesive anchors (threaded rods or reinforcing bar) specified on the drawings shall be installed using "HIT-HY 200" as manufactured by the Hilti Corporation. Install in strict accordance with ICC Report No. ESR-3187. Rods shall be ASTM F1554 Gr.55, unless noted otherwise. Special inspection of installation is required.

EXPANSION ANCHORS
Expansion anchors into concrete and concrete masonry units shall be "Kwik Bolt TZ" as manufactured by the Hilti Corporation. Install in strict accordance with ICC Report Number ESR-1917, including minimum embedment requirements. At concrete masonry or brick masonry applications, bolts shall be installed into fully-grouted cells. Substitutes proposed by contractor shall be submitted for review with ICC Reports indicating equivalent or greater load capacities. Special inspection of installation is required.

SCREW ANCHORS
Post-installed mechanical anchors into concrete and concrete masonry units shall be "Titen HD" screw anchors as manufactured by the Simpson Strong-Tie Company. Install in strict accordance with ICC Report Number ESR-2713 (into concrete) or ESR-1056 (into masonry), including minimum embedment requirements. At concrete masonry or brick masonry applications, bolts shall be installed into fully-grouted cells. Titen HD screw anchors are approved for dry interior applications only. Special inspection is required for the installation of all screw anchors resisting tension.

DRIVE PINS
Drive pins and other powder-actuated fasteners shall be low velocity type "Series X-U" (0.157" Ø, unless noted otherwise) as manufactured by the Hilti Corporation, or an approved equivalent in strength and embedment. Install in strict accordance with ICC Report Number ESR-2269. Minimum embedment in concrete shall be 1", unless noted otherwise. Maintain at least 3" to nearest concrete edge.

STRUCTURAL STEEL

REFERENCE STANDARDS
Steel construction shall conform to the latest editions of the AISC Specifications and Codes. "Specification for Structural Steel Buildings" ANSI/AISC 360, "Specification for Structural Joints Using High-Strength Bolts" AISC 348 and "Code of Standard Practice for Steel Buildings and Bridges" AISC 303 amended by the deletion of paragraph 4.4.1.

FABRICATORS
Fabricators for structural steel must have a quality assurance program in place. The quality assurance program must meet the requirements of one of the following methods:

- Registration in the Washington Association of Building Officials (WABO) Steel Fabricator Registration Program
- Participation in the AISC quality certification program, designated as an AISC Certified Plant, Category BU.
- Meeting the requirements of AISC 360 for structural steel buildings, appendix N and submitting plan documentation to the authority having jurisdiction, the Engineer of Record, and the Owner or Owner's designee. Quality assurance requirements of steel construction for wind and seismic (AISC 341, Chapter J) shall be included as required in Special Inspection section of the general notes, where applicable.

Fabricator for structural steel must be registered and approved to perform work without special inspection. At completion of fabrication, the fabricator shall submit a certificate of compliance to the building official stating that the work was performed in accordance with the approved construction documents.

FINISHING
The terms finish, finish column, finishing, milled, milled surface or milling are intended to include surfaces which have been accurately sawed or finished to a true plane as defined by AISC.

Grind surface value equal to or less than 1,000 as defined by ANSI B46.2 (4-inch and thinner).

STEEL COATINGS AND PROTECTION
Coatings and protection (weather, fire, corrosion, etc.) shall be as specified by the architect. Galvanized steel members shall conform to ASTM A-123 and galvanized steel hardware shall conform to ASTM A-153. Guidelines outlined in ASTM A-384 shall be followed in order to safeguard against warping and distortion during hot-dip galvanizing of steel assemblies. Steel anchors and ties embedded in concrete and masonry shall be left unpainted.

CORROSION CONTROL
All steel noted as galvanized and any steel in ground contact or within 6-inches of grade shall be zinc-plated (galvanized) by the hot-dipped galvanic method (or pre-approved equivalent), except where such steel is to be fully encased in concrete. Furthermore, any surface where the coating has been removed or damaged must be brushed and re-coated in clean, dry field conditions with an approved zinc-based anti-corrosion coating except where such area is to be encased in concrete.

SHOP PAINTING
All steel to be shop primed. Steel fire proofed or encased with concrete need not be painted. All other steel shall be given one coat of shop paint, in accordance with Section M3 of the AISC "Specification" and Section 6.5 of the AISC "Code", unless noted otherwise. The surface preparation of the structural steel prior to painting shall be in accordance with the specific paint manufacturer's published recommendations. Structural joints and faying surfaces which are to be connected by means of welds or bolts shall not be painted until all welds and bolts are installed, inspected and approved. Paint shall be held back 3" from the faying surface or the joint to be welded.

bcra
T 253.627.4367 F 253.627.4365 WWW.BCRADESIGN.COM
2108 PACIFIC AVENUE, SUITE 300, TACOMA, WA 98402

SEAL

FOR COORDINATION

LUND OPSAHL
1215 Fourth Avenue, Suite 1200
Seattle, Washington 98161
206-402-5156 www.lundopsahl.com

PROJECT
PORT OF EVERETT
WINE WALK BUILDING A12
XXXX SEINER DRIVE
EVERETT, WASHINGTON 98201

REVISIONS

DATE
12/13/2023
BCRA NO.
23045.00.00
DRAWN BY: JK
REVIEWED BY:
SHEET TITLE
STRUCTURAL GENERAL NOTES

bcra
© COPYRIGHT 2023 - BCRA, INC. ALL RIGHTS RESERVED
SHEET
S-003
100% DD Set

IF SHEET MEASURES LESS THAN 22"X34", IT IS A REDUCED PRINT. REDUCE SCALE ACCORDINGLY

STRUCTURAL STEEL

SHOP PAINTING
All steel to be shop primed. Steel fire proofed or encased with concrete need not be painted. All other steel shall be given one coat of shop paint, in accordance with Section M3 of the AISC "Specification" and Section 6.5 of the AISC "Code", unless noted otherwise. The surface preparation of the structural steel prior to painting shall be in accordance with the specific paint manufacturer's published recommendations. Structural joints and faying surfaces which are to be connected by means of welds or bolts shall not be painted until all welds and bolts are installed, inspected and approved. Paint shall be held back 3" from the faying surface or the joint to be welded.

ARCHITECTURALLY EXPOSED STRUCTURAL STEEL (AESS)
Steel members exposed to view in the final building shall meet the requirements of Section 10 of the AISC Code of Standard Practice. This criteria does not apply to steel members in mechanical, electrical and storage rooms.

STRUCTURAL STEEL MEMBERS
Structural Steel shall conform to the following requirements (unless otherwise shown on plans):

STRUCTURAL STEEL MEMBER SPECIFICATIONS TABLE

Type of Member	ASTM Specification	Fy
Rolled wide-flange shapes	A992	50 ksi
Square & rectangular HSS sections	A500, Grade B or C	46 ksi
Round HSS sections	A500, Grade B	42 ksi
Steel pipes	A53, Grade B	35 ksi
Plates, channels, angles	A36, Grade 36	36 ksi
Threaded rods	A36	36 ksi
Welded threaded studs	A108	-
Anchor rods (hooked, headed, threaded & nutted)	F1554, Grade 36 (UNO)	36 ksi
Common bolts	A307, Grade A	-
Structural framing bolts	A325, Type 1	-
Twist-off type tension-control bolts	F1852 (A325, Type 1)	-
Hex nuts	A563	-
Flat circular washers	F436	-
Square or rectangular beveled washers	F436	-
Compressible-washer type direct-tension indicators	F959	-

STEEL FRAMING
The contractor shall be responsible for all erection aids and joint preparations that include, but are not limited to: erection angles, lift holes, and other aids; welding procedures; required root openings; root face dimensions; groove angles; backing bars; copes; surface roughness values; and tapers of unequal parts.

WELDING
All welding shall be in conformance with AISC and AWS standard and shall be performed by AWS/WABO certified welders using E70XX Electrodes in accordance with AWS D1.1. Only Prequalified welds, as defined by AWS, shall be used.

Shop drawings shall show all welding with AWS D1.4 symbols. Welds shown on the drawings are the minimum sizes. Increase weld size to AWS minimum sizes, based on plate thickness. Minimum welding shall be 3/16" UNO. Filler metal with a specified minimum Charpy V-notch toughness of 20 ft-lb at 0°F or lower shall be used at complete-joint-penetration groove welds. Welds designated as demand critical shall be made with filler metals meeting the requirements specified in AWS D1.8 clause 6.3.

Welding procedures shall be submitted to the Owner's testing agency for review prior to commencement of fabrication or erection. All complete-penetration welds shall be ultrasonically tested upon completion of the connection except plate less than or equal to 1/4" thick shall be magnetic particle tested. Complete penetration welds on plates less than or equal to 1/4" shall be magnetic particle tested.

Field welds shown are Engineer's recommendation. Contractor is responsible for actual welds used to support specific means and methods.

WELDING GALVANIZED STEEL
Welding of galvanized steel shall conform to AWS specification D-19.0. Welded areas of galvanized steel shall be touched up in conformance with ASTM A-780.

BOLTS
All high-strength bolts, not part of the Seismic Load Resisting System (SLRS), need only be tightened to snug-tight (ST) conditions, defined as the tightness that exists when all plies in a joint are in firm contact. This may be attained by a few impacts of an impact wrench or the full effort of a man using an ordinary spud wrench. All bolt holes shall be standard size, unless noted otherwise. All ASTM A-307 bolts shall be provided with lock washers under nuts or self-locking nuts.

Connections, joints and fasteners that are part of the Seismic Load Resisting System (SLRS) shall be pretensioned (PT) high-strength bolts and shall meet the requirements for slip-critical (SC) joints, UNO. All faying surfaces shall be prepared as required for class A or better slip-critical joints. All high-strength bolts shall be installed, tightened and inspected in accordance with AISC 348. Slip-critical (SC) connections shall use compressible-washer-type direct tension indicators or twist-off-type tension-control bolts.

WOOD

MATERIAL CRITERIA
Framing lumber shall be kiln dried or MC-19 (unless more stringent criteria are required in these notes or on the drawings) and graded and marked in conformance with the latest WCLIB "Standard Grading Rules No. 17 for West Coast Lumber". Furnish to the following minimum standards:

WOOD STANDARDS

Member	Grade	Moisture Content
4x Beams & posts, 6x Posts	DF #2	MC19
4x Treated beams & posts, and 6x treated posts	DF #2	MC19
2x Joists, rafters, built-up beams, and headers	DF #2	MC19
2x, 3x Flatwise & edgewise blocking	DF Standard	MC19
3x Nailers on steel beams	DF #2	MC19
2x4 and 2x6 Studs	DF #2	MC19
3x Studs	DF #2	MC19
2x4 Plates	DF Standard	KD15
2x6 Plates	DF #2	KD15
2x, 3x, and 4x Treated plates, ledgers	DF #2	KD15
Tongue and groove decking (non-visual)	DF Utility/ #3 Commercial DED	MC19
Tongue and groove decking (exposed)	DF #2	MC19
Tongue and groove decking (upper end exposed)	DF Select DEX	MC19

MOISTURE CONTENT AND CARE OF MATERIAL DURING CONSTRUCTION
All 2x studs and plates shall be kiln dried. The Contractor shall take measures to minimize exposure of sawn lumber and engineered wood products to moisture during construction. Excessive changes in moisture content during construction may result in swelling and shrinkage of a single story level in the magnitude of 1/2". This may create problems where multi-story wood construction joins multi-story concrete wall construction. All wood framed construction shall have maximum moisture content not to exceed 10% at time of fur-out, which shall be verified by a testing agency hired by the Owner. These test results shall be submitted to the Architect and Structural Engineer of Record for review prior to installation and interior drywall installation is performed. In addition, pre-loading the entire wood building with the interior drywall while the building is being dried out is recommended before wood ledgers are attached to concrete shear walls.

Wood joists and beams supporting topping slabs or subjected to construction loading shall have a maximum live load deflection of l/600. The contractor shall be responsible for ensuring that the moisture content of wood members supporting concrete or construction loads is, and remains, at 10% or less. Wood framing with higher moisture contents before, or during, the placement of topping slabs or subjected to construction loading are subject to excessive creep. Contractor to provide means to maintain the moisture content as required to prevent creep.

VERTICAL SHRINKAGE
Allow for 1/2" of wood shrinkage/compression at each level (including foundation). Values are cumulative for the height of the building. Building systems such as mechanical, electrical, plumbing, fire sprinklers, etc. shall have flexible components that account for the potential wood shrinkage/compression. Structural finishes shall also account for the potential wood shrinkage/compression.

TREATED WOOD
All wood framing in direct contact with concrete or masonry, exposed to weather, or that rest on exterior foundation walls and are located within 8" of earth, shall be pressure-treated with an approved preservative per IBC section 2303.1.9. Cut or drilled sections of treated material shall be treated with an approved preservative per IBC section 2303.1.9. See IBC section 2304.12 for additional requirements.

GLUE LAMINATED TIMBER MATERIAL
Glue laminated timber, or glulam, members shall be fabricated in conformance with ANSI/AITC A190.1 and ASTM D3737, Stress Class 24F-1.8E. Each member shall bear an AITC identification mark and shall be accompanied by an AITC certificate of conformance. All simple span beams shall be Douglas fir combination 24F-V4, fb = 2,400 psi, fv =265 psi and all cantilevered beams and columns shall be Douglas fir combination 24F-V8, fb = 2,400 psi, fv = 265 psi unless noted otherwise. Camber all simple span glulam beams to 3,500' radius or zero camber, unless shown otherwise on the plans.

STRUCTURAL COMPOSITE LUMBER
Manufactured LVL lumber shall be manufactured under a process approved by the national research board. Each piece shall bear a stamp or stamps noting the name and plant number of the manufacturer, the grade, the national research board number, and the quality control agency. All LVL lumber shall be manufactured in accordance ICC Report ESR-2993. LVL lumber shall be manufactured using veneer glued with a waterproof adhesive complying with the requirements of ASTM D2559 with all grain parallel with the length of the member. The members shall have the following minimum properties:

MINIMUM DESIGN PROPERTIES FOR COMPOSITE LUMBER (Redlam)

Grade	Orientation	E (ksi)	Fb (psi)	Fcll (psi)	Fv (psi)
2.0E LVL	Beam	2,000	2,900	2,635	285
2.0E LVL	Plank	2,000	3,430	2,635	190

Design shown on plans is based on RedLam products manufactured by the RedBuilt Corporation. Alternate manufacturers may be used subject to review and approval by the Architect and Structural Engineer of Record, alternate joist hangers and other hardware may be substituted for items shown provided they have ICC approval for equal or greater load capacities. All joist hangers and other hardware shall be compatible in size with members provided.

WOOD (cont'd)

PLYWOOD WEB JOISTS
Prefabricated plywood web joist design shown on plans is based on Red-built products manufactured by the Red-Built Corporation. Alternate plywood web joist manufacturers may be used provided they conform with the ICC evaluation service reports ESR-1387 and ESR-1153 and are subject to review and approval by the Architect and Structural Engineer of Record. Alternate plywood web joists must have equivalent section properties and allowable stresses to those previously specified to be considered. Alternate joist hangers and other hardware may be substituted for items shown provided they have ICC approval for equal or greater load capacities. All joist hangers and other hardware shall be compatible in size with plywood web joist provided. All necessary bridging, blocking, blocking panels, stiffeners, etc., shall be detailed and furnished by the manufacturer. All permanent and temporary bridging shall be installed in conformance with manufacturer's specifications. The following deflection criteria shall be maintained with all alternates.

- Floor live load deflections shall be limited to span/480 (span/360 at 100 psf live load).
- Roof total load deflections shall be limited to span/240.
- Specified plywood web joists at floors have been designed for a minimum TJ-Pro rating of 40 in addition to the maximum allowable deflections noted above.

Alternative framing members at shear wall rim / blocking locations may be used, provided ICC reports or manufacturer's test data are submitted. The submitted data shall verify the ability of the alternative members to provide equivalent or greater shear capacities using the specified nail and anchor sizes and spacing.

WOOD STRUCTURAL PANELS
Wood structural panels shall be APA rated sheathing, exposure 1 durability classification, in conformance with USDOC PS 1, ASTM D 5457 and IBC 2303.1.5 and Table 2304.8(2).

Oriented strand board (OSB), shall be in accordance with USDOC PS 2, and of equivalent thickness, exposure rating and span rating and may be used in lieu of plywood pending OSB substitution approval by Architect.
Contractor to ensure OSB is protected to prevent warping during installation.

FASTENERS
Fasteners shall conform to the following requirements, unless noted otherwise. Splitting shall be avoided at all wood fasteners:

Bolts	NDS section 12.1.3
Lag screws	NDS section 12.1.4
Wood screws	NDS section 12.1.5
Nails	NDS section 12.1.6
Wood-to-wood connection bolts	ASTM A307
Steel-to-wood connection bolts	ASTM A307
Anchor rods (7" embed min)	ASTM F1554 grade 36 with threaded ends and welded nut at end (provide higher grade at holdown rods where indicated)

Thru-bolt and anchor rod holes shall be at least 1/32" but no more than 1/16" larger than bolt/rod diameter. Clearance holes for lag screw shanks shall have the same diameter as the lag shank and the same penetration depth as the length of the unthreaded shank. Lead holes for threaded portion of lag screws shall have a diameter of 55 to 60% of lag screw shank diameter and shall extend the length of the threaded portion of the lag screw. Fasteners exposed to earth, weather or located in pressure preservative or fire retardant treated wood shall comply with the criteria listed in the "Metal Products in Contact with Treated Lumber" section.

FRAMING CONNECTORS
Timber connectors called out by letters and numbers shall be "Strong-Tie" by the Simpson Strong-Tie Company. Equivalent devices by other manufacturers may be substituted, provided they have ICC approval for equal or greater load capacities.

All connectors shall be installed in accordance with the manufacturer's recommendations. Provide number and size of fasteners as specified by manufacturer. All shims shall be seasoned and dried and the same grade (minimum) as members connected. All nails shall be as called out in the "Fasteners" section of this sheet, unless noted otherwise. All bolts in wood members shall conform to ASTM A307. Provide washers under the heads and nuts of all bolts and lag screws bearing on wood. Where connector straps connect two members, place one-half of the nails or bolts in each member.

METAL PRODUCTS IN CONTACT WITH TREATED LUMBER
Simpson hardware in contact with ACQ, CA, or CBA pressure-preservative treated wood shall have a Zmax finish (G185 HDG per ASTM A653) or shall be post hot-dip galvanized (per ASTM A123 for connectors and ASTM A153 for fasteners) unless noted otherwise. Exception: type 304 or 316 stainless steel connectors and fasteners are required for the following applications:

- ACQ, CA, or CBA treatments with ammonia where members are used in exterior applications.
- All ACZA treatments
- Retention levels greater than 0.40 pcf for ACQ, 0.41 pcf for CBA-A, or 0.21 pcf for CA-B treatments.

Stainless steel connectors require matching stainless steel fasteners. Zmax and post hot-dip galvanized connectors require fasteners galvanized per ASTM A153. Thru-bolts and anchor rods used in dry conditions shall be permitted to be of mechanically deposited zinc coated steel with coating weights in accordance with ASTM B 695, class 55 minimum. See IBC section 2304.10.5.1 and "Framing Connectors" section on this sheet for additional requirements.

bcra
T 253.627.4367 F 253.627.4395 WWW.BCRADESIGN.COM
2108 PACIFIC AVENUE, SUITE 300, TACOMA, WA 98402

SEAL

FOR COORDINATION

LUND OPSAHL
1215 Fourth Avenue, Suite 1200
Seattle, Washington 98161
206-402-5156 www.lundopsahl.com

PROJECT
PORT OF EVERETT
WINE WALK BUILDING A12
XXXX SEINER DRIVE
EVERETT, WASHINGTON 98201

REVISIONS

DATE
12/13/2023
BCRA NO.
23045.00.00
DRAWN BY: JK
REVIEWED BY:
SHEET TITLE
STRUCTURAL GENERAL NOTES

bcra
© COPYRIGHT 2023 - BCRA, INC. ALL RIGHTS RESERVED
SHEET
S-004
100% DD Set

22x34 12/13/2023 1:20:25 PM

IF SHEET MEASURES LESS THAN 22"X34", IT IS A REDUCED PRINT. REDUCE SCALE ACCORDINGLY

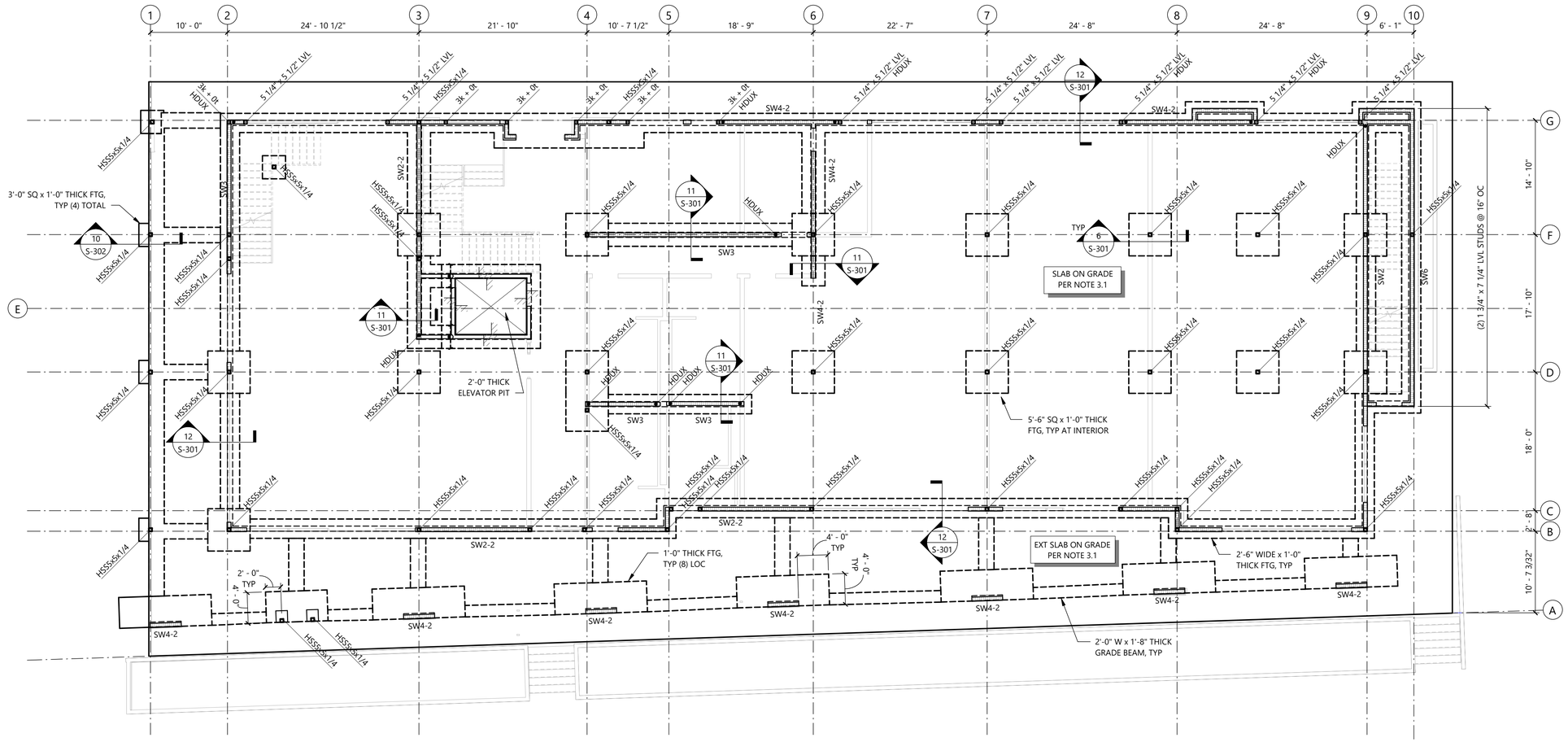

1 FIRST FLOOR FOUNDATION PLAN

SCALE: 1/8" = 1'-0"

North

FOUNDATION PLAN NOTES

1. GENERAL

1.1. ELEVATION AT TOP OF SLAB SHALL BE 0'-0", UNO.
ELEVATION AT TOP OF FOOTING SHALL BE 0'-8" BELOW TOP OF SLAB, UNO.

[-X'-X"] INDICATES ELEVATION AT TOP OF FOOTING, MEASURED IN FEET.

FOOTING ELEVATIONS SHOWN ARE FOR CONTRACTOR CONVENIENCE AND BIDDING ONLY. FINAL ELEVATIONS SHALL BE DETERMINED BY ON-SITE VERIFICATION BY SOILS ENGINEER, BUT SHALL NOT BE SHALLOWER THAN THOSE SHOWN ON THIS PLAN.
REFER TO STRUCTURAL GENERAL NOTES FOR ADDITIONAL INFORMATION.

1.2. REFER TO ARCHITECTURAL DRAWINGS FOR DIMENSIONS NOT SHOWN.

1.3. REFER TO MECHANICAL DRAWINGS FOR LOCATIONS OF ALL MECHANICAL EQUIPMENT.

1.4. REFER TO STRUCTURAL GENERAL NOTES FOR ADDITIONAL REQUIREMENTS.

1.5. EXISTING CONDITIONS ARE ASSUMED AND MUST BE VERIFIED BY THE CONTRACTOR. WHERE DISCOVERED CONDITIONS VARY FROM THOSE SHOWN ON PLANS, CONTRACTOR SHALL CONTACT THE ENGINEER BEFORE PROCEEDING WITH CONSTRUCTION.

1.6. WHEREVER NEW CONCRETE ABUTS EXISTING CONCRETE, ADD DOWELS TO MATCH REINFORCEMENT IN NEW CONSTRUCTION.
LAP DOWELS WITH NEW REINFORCEMENT PER TYPICAL LAP SPLICE TABLE AND EMBED INTO EXISTING CONCRETE WITH EPOXY GROUT PER STRUCTURAL GENERAL NOTES.
FOR BARS #5 AND SMALLER: EMBED 6" MIN; FOR BARS #6 AND LARGER: EMBED 9" MIN.

2. FOUNDATIONS

2.1. EXCAVATE, BACKFILL, AND PREPARE SOILS AS REQUIRED PER STRUCTURAL GENERAL NOTES AND GEOTECHNICAL REPORT.

2.2. REFER TO MECHANICAL AND CIVIL DRAWINGS FOR LOCATIONS OF ALL UNDERSLAB PIPING. FOOTINGS MAY BE LOWERED TO AVOID CONFLICTS WITH PIPING.

2.3. REFER TO FOOTING SCHEDULE FOR SIZES AND REINFORCEMENT AT ALL COLUMN FOOTINGS.

2.4. STEP FOOTINGS AS REQUIRED PER TYPICAL STEPPED FOOTING DETAIL.

3. SLABS

3.1. TYPICAL SLAB ON GRADE SHALL BE 4" THICK WITH #4 @ 18" OC EACH WAY AT CENTER OF SLAB.

3.2. PROVIDE VAPOR BARRIER AND BASE COURSE BELOW SLAB AT INTERIOR SPACES PER GEOTECH REPORT.

3.3. PROVIDE CONTROL OR CONSTRUCTION JOINTS ON ALL COLUMN LINES, AT ALL RE-ENTRANT CORNERS, AND AT A MAXIMUM SPACING OF 30x SLAB THICKNESS.
PLACE JOINTS IN A MANNER THAT DIVIDES THE SLAB INTO RECTANGULAR AREAS 400 SQUARE FEET OR LESS. AREAS SHALL BE APPROXIMATELY SQUARE AND HAVE NO ACUTE ANGLES.
ALL JOINT LOCATIONS MUST BE APPROVED BY THE ARCHITECT PRIOR TO CONSTRUCTION.
REFER TO TYPICAL SLAB JOINT DETAIL.

4. WALLS

4.1. STRUCTURAL WALL STUDS AT THIS LEVEL SHALL BE AS FOLLOWS, UNO:

EXTERIOR WALLS.....2x6 @ 16" OC
INTERIOR WALLS.....2x6 @ 16" OC

SEE DETAIL SHEETS S-601 & S-602 FOR TYPICAL WALL FRAMING REQUIREMENTS AND FOR TYPICAL SHEARWALL REQUIREMENTS. FRAME ALL SHEAR WALL INTERSECTIONS PER TYPICAL DETAILS.

4.2. USE (3) KING STUDS AND (1) TRIMMER STUD AT EXTERIOR HEADERS AT THIS LEVEL, UNLESS NOTED OTHERWISE. USE (1) KING STUD AND (2) TRIMMER STUDS AT INTERIOR HEADERS AT THIS LEVEL, UNO.

#k+#t — NUMBER OF KINGS PLUS TRIMMERS, UP FROM THIS LEVEL WHERE TYPICAL FRAMING DOES NOT APPLY.

4.2. ALL EXTERIOR WALLS SHALL BE CONSTRUCTED AS SW6 PER TYPICAL SHEAR WALL SCHEDULE, UNO.

LEGEND

- STRUCTURAL WALL THIS LEVEL WITH CONT SILL PLATE AT OPENING
- STRUCTURAL WALL THIS LEVEL WITH BREAK IN SILL PLATE AT OPENING
- SWx — SHEAR WALL PER S-601
- HDU# — SIMPSON TENSION TIE HOLDOWN USE (2) 2x MIN HOLDOWN STUDS. SEE 2/S-603
- #k+#t — NUMBER OF KINGS PLUS TRIMMERS, UP FROM THIS LEVEL.

bcra
T 253.627.4367 F 253.627.4395 WWW.BCRADESIGN.COM
2106 PACIFIC AVENUE, SUITE 300, TACOMA, WA 98402

SEAL

FOR COORDINATION

LUND OPSAHL
1215 Fourth Avenue, Suite 1200
Seattle, Washington 98161
206-402-5156 www.lundopsahl.com

PROJECT
PORT OF EVERETT
WINE WALK BUILDING A12
XXXX SEINER DRIVE
EVERETT, WASHINGTON 98201

REVISIONS

DATE 12/13/2023
BCRA NO. 23045.00.00
DRAWN BY: JK
REVIEWED BY:
SHEET TITLE FIRST FLOOR FOUNDATION PLAN

bcra

© COPYRIGHT 2023 - BCRA, INC. ALL RIGHTS RESERVED

SHEET

S-121

100% DD Set

22x34 12/13/2023 1:20:26 PM

IF SHEET MEASURES LESS THAN 22"X34", IT IS A REDUCED PRINT. REDUCE SCALE ACCORDINGLY

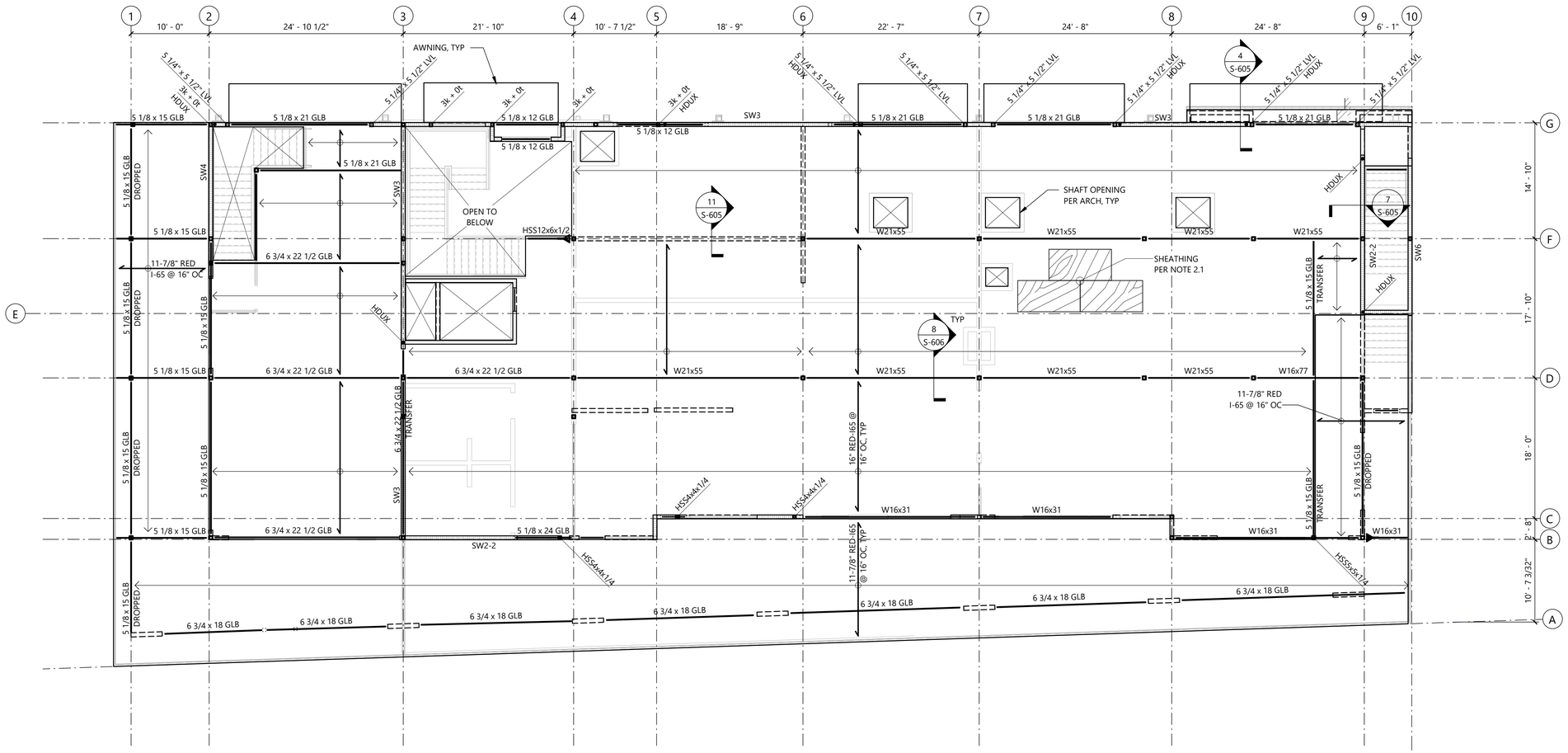

1 SECOND FLOOR FRAMING PLAN

SCALE: 1/8" = 1'-0"

North

SECOND FLOOR FRAMING PLAN NOTES

1. GENERAL

1.1. ELEVATION AT TOP OF SHEATHING SHALL BE 13'-0", UNO.

1.3. REFER TO ARCHITECTURAL DRAWINGS FOR DIMENSIONS NOT SHOWN.

1.4. REFER TO MECHANICAL DRAWINGS FOR LOCATIONS OF ALL MECHANICAL EQUIPMENT.

1.5. REFER TO STRUCTURAL GENERAL NOTES FOR ADDITIONAL REQUIREMENTS.

1.6. EXISTING CONDITIONS ARE ASSUMED AND MUST BE VERIFIED BY THE CONTRACTOR. WHERE DISCOVERED CONDITIONS VARY FROM THOSE SHOWN ON PLANS, CONTRACTOR SHALL CONTACT THE ENGINEER BEFORE PROCEEDING WITH CONSTRUCTION.

2. FLOORS

2.1. FLOOR SHALL BE 1 1/2" GYPCRETE TOPPING OVER 23/32" APA-RATED SHEATHING, (48/24) EXPOSURE 1, TONGUE & GROOVE, GLUED AND NAILED. WHERE BLOCKED DIAPHRAGM IS NOTED ON PLAN, USE 2x FLAT BLOCKING AND 'Z' CLIPS AT UNSUPPORTED PANEL EDGES.

NAIL SHEATHING AS FOLLOWS (SEE 9 & 10/S-602) :

FLOOR BOUNDARY (BN).....10d @ 6"
PANEL EDGES (EN).....10d @ 6"
OTHER SUPPORTS, FIELD NAILING.....10d @ 10"
BLOCKING, INTERIOR RIM JOISTS & COLLECTORS.....10d @ 4"

NAILS SHALL BE DRIVEN FLUSH WITH THE FACE OF SHEATHING. GLUE SHALL CONFORM TO APA AFG-01.

2.2. Jx INDICATES WOOD FLOOR JOIST. SEE JOIST SCHEDULE THIS SHEET.

Jx* INDICATES SEISMIC COLLECTOR, MEMBER TO RECEIVE DIAPHRAGM BOUNDARY NAILING PER 9 & 10/S-602.

2.3. TYPICAL INTERIOR HEADER SHALL BE 4x10 DF NO. 2, UNO. RIM IS HEADER AT EXTERIOR WALLS. DO NOT SPLICE RIM OVER OPENINGS. SPLICE SHEAR WALL RIM JOISTS PER 5/S-602.

2.4. TYPICAL RIM JOISTS SHALL BE THE LARGER OF 1-1/2" LSL OR AS NEEDED FOR SHEAR WALL NAILING PER 1/S-601, UNO. RIM TO MATCH BEAM OR BLOCKING WIDTH WHEN STRAPPING BOTH SIDES PER 5/S-602.

2.5. TYPICAL HANGERS SHALL BE SIMPSON IUS OR ITS, UNO.

3. WALLS

3.1. STRUCTURAL WALL STUDS AT THIS LEVEL SHALL BE AS FOLLOWS, UNO:

EXTERIOR WALLS.....2x6 @ 16" OC
INTERIOR WALLS.....2x6 @ 16" OC

SEE DETAIL SHEETS S-601 & S-602 FOR TYPICAL WALL FRAMING REQUIREMENTS AND FOR TYPICAL SHEAR WALL REQUIREMENTS. FRAME ALL SHEAR WALL INTERSECTIONS PER TYPICAL DETAILS.

3.3. USE (3) KING STUDS AND (1) TRIMMER STUD AT EXTERIOR HEADERS AT THIS LEVEL, UNLESS NOTED OTHERWISE. USE (1) KING STUD AND (2) TRIMMER STUDS AT INTERIOR HEADERS AT THIS LEVEL, UNLESS NOTED OTHERWISE.

#k+#t — NUMBER OF KINGS PLUS TRIMMERS, UP FROM THIS LEVEL WHERE TYPICAL FRAMING DOES NOT APPLY.

3.5. ALL EXTERIOR WALLS SHALL BE CONSTRUCTED AS SW6 PER TYPICAL SHEAR WALL SCHEDULE, UNO.

LEGEND

- STRUCTURAL WALL BELOW WITH HEADER (CONT WALL PLATES)
- STRUCTURAL WALL BELOW WITH FLUSH BEAM (BREAK WALL PLATES)
- STRUCTURAL WALL THIS LEVEL WITH CONT SILL PLATE AT OPENING
- STRUCTURAL WALL THIS LEVEL WITH BREAK IN SILL PLATE AT OPENING
- FLOOR JOIST & EXTENT PER NOTE 2.2
- BEAM PER PLAN OR HEADER PER NOTE 2.3
- JOIST HANGER PER NOTE 2.5
- SWx — SHEAR WALL PER S6.##
- MSTC — SIMPSON STRAP TIE HOLDOWN USE (2) 2x MIN AT STRAPS; SEE 2/S-603
- #k+#t — NUMBER OF KINGS PLUS TRIMMERS, UP FROM THIS LEVEL
- INDICATES BLOCKED DIAPHRAGM PER NOTE 2.1
- STRAP & BLOCKING PER PLAN, SEE NOTE 2.6
- STRAP PER PLAN, SEE NOTE 2.6

bcra
T 253.627.4367 F 253.627.4395 WWW.BCRADESIGN.COM
2108 PACIFIC AVENUE, SUITE 300, TACOMA, WA 98402

SEAL

FOR COORDINATION

LUND OPSAHL
1215 Fourth Avenue, Suite 1200
Seattle, Washington 98161
206-402-5156 www.lundopsahl.com

PROJECT
PORT OF EVERETT
WINE WALK BUILDING A12
XXXX SEINER DRIVE
EVERETT, WASHINGTON 98201

REVISIONS

DATE 12/13/2023
BCRA NO. 23045.00.00
DRAWN BY: JK
REVIEWED BY:
SHEET TITLE SECOND FLOOR FRAMING PLAN

bcra

© COPYRIGHT 2023 - BCRA, INC. ALL RIGHTS RESERVED

SHEET

S-122

100% DD Set

IF SHEET MEASURES LESS THAN 22"X34", IT IS A REDUCED PRINT. REDUCE SCALE ACCORDINGLY

22x34 12/13/2023 1:20:27 PM

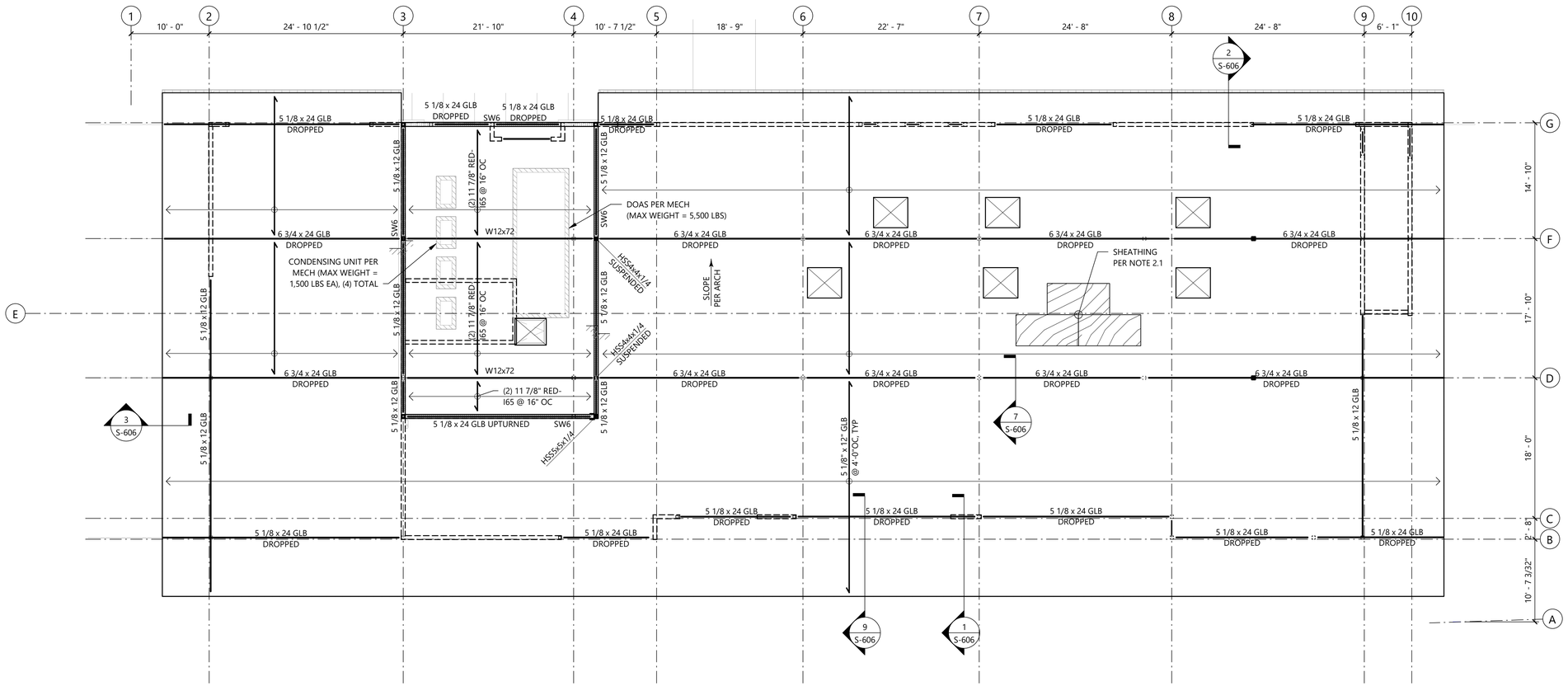

1 ROOF FRAMING PLAN

SCALE: 1/8" = 1'-0"

North

ROOF FRAMING PLAN NOTES

1. GENERAL

1.1. ELEVATION AT TOP OF SHEATHING SHALL BE VARIES, UNO.

SLOPE ALL ROOF FRAMING PER ARCHITECT, UNO.
PROVIDE BUILT-UP SLOPE AND DRAINAGE PER ARCHITECT.

1.2. REFER TO ARCHITECTURAL DRAWINGS FOR DIMENSIONS NOT SHOWN.

1.3. REFER TO MECHANICAL DRAWINGS FOR LOCATIONS OF ALL MECHANICAL EQUIPMENT.

1.4. REFER TO STRUCTURAL GENERAL NOTES FOR ADDITIONAL REQUIREMENTS.

1.5. EXISTING CONDITIONS ARE ASSUMED AND MUST BE VERIFIED BY THE CONTRACTOR. WHERE DISCOVERED CONDITIONS VARY FROM THOSE SHOWN ON PLANS, CONTRACTOR SHALL CONTACT THE ENGINEER BEFORE PROCEEDING WITH CONSTRUCTION.

2. ROOFS

2.1. ROOF SHEATHING SHALL BE 15/32" APA RATED SHEATHING (32/16), EXPOSURE 1. SHEATHING IS SUPPORTED BY 2x T&G TIMBER DECKING. NAIL SHEATHING PANELS AS FOLLOWS:

FLOOR/ROOF BOUNDARY (BN).....10d @ 6"
PANEL EDGES (EN).....10d @ 6"
OTHER SUPPORTS, FIELD NAILING (FN).....10d @ 12"
BLOCKING, INTERIOR RIM JOISTS AND COLLECTORS.....10d @ 6"

2.2. Jx INDICATES WOOD ROOF JOIST. SEE JOIST SCHEDULE THIS SHEET.

Jx* INDICATES SEISMIC COLLECTOR; MEMBER TO RECEIVE DIAPHRAGM BOUNDARY NAILING PER 9 & 10/S-602.

2.3. TYPICAL INTERIOR HEADER SHALL BE 4x10 DF NO. 2, UNO. RIM IS HEADER AT EXTERIOR WALLS. DO NOT SPLICE RIM OVER OPENINGS. SPLICE SHEAR WALL RIM JOISTS PER 5/S-602.

2.4. TYPICAL RIM JOISTS SHALL BE THE LARGER OF 1-1/2" LSL OR AS NEEDED FOR SHEAR WALL NAILING PER 1/S-601, UNO. RIM TO MATCH BEAM OR BLOCKING WIDTH WHEN STRAPPING BOTH SIDES PER 5/S-602.

2.5. TYPICAL HANGERS SHALL BE SIMPSON IUS OR ITS, UNO.

2.6. (X) INDICATES SEISMIC COLLECTOR STRAP PER SCHEDULE THIS SHEET. SEE DETAIL 11/S-603.

LEGEND

- STRUCTURAL WALL BELOW WITH HEADER (CONT WALL PLATES)
- STRUCTURAL WALL BELOW WITH FLUSH BEAM (BREAK WALL PLATES)
- FLOOR JOIST & EXTENT PER NOTE 2.2
- BEAM PER PLAN OR HEADER PER NOTE 2.3
- JOIST HANGER PER NOTE 2.5
- INDICATES OVERFRAMING
- INDICATES BLOCKED DIAPHRAGM PER NOTE 2.1
- STRAP & BLOCKING PER PLAN, SEE NOTE 2.6
- STRAP PER PLAN, SEE NOTE 2.6

bcra
T 253.627.4367 F 253.627.4395 WWW.BCRADESIGN.COM
2108 PACIFIC AVENUE, SUITE 300, TACOMA, WA 98402

SEAL

FOR COORDINATION

LUND OPSAHL
1215 Fourth Avenue, Suite 1200
Seattle, Washington 98161
206-402-5156 www.lundopsahl.com

PROJECT
PORT OF EVERETT
WINE WALK BUILDING A12
XXXX SEINER DRIVE
EVERETT, WASHINGTON 98201

REVISIONS

DATE 12/13/2023
BCRA NO. 23045.00.00
DRAWN BY: JK
REVIEWED BY:
SHEET TITLE ROOF FRAMING PLAN

bcra

© COPYRIGHT 2023 - BCRA, INC. ALL RIGHTS RESERVED

SHEET

S-123

100% DD Set

IF SHEET MEASURES LESS THAN 22"X34", IT IS A REDUCED PRINT. REDUCE SCALE ACCORDINGLY

22x34 12/13/2023 1:20:27 PM

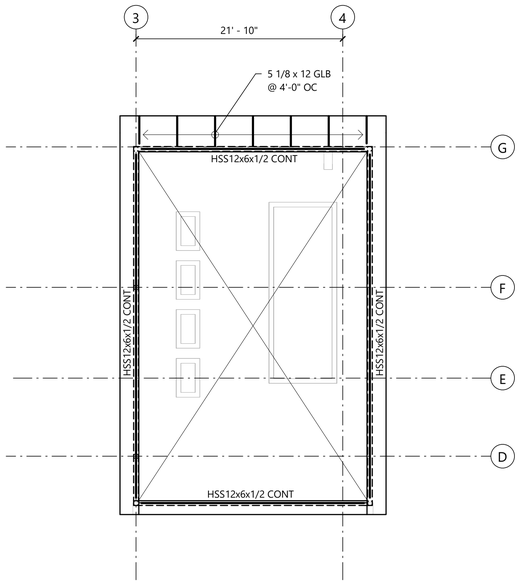

1 MECHANICAL WELL TOP OF FRAMING PARTIAL PLAN
Scale: 1/8" = 1'-0"

MECHANICAL WELL FRAMING PLAN NOTES

1. SEE S-123 FOR SIMILAR PLAN NOTES.

bcra
T 253.627.4367 F 253.627.4395 WWW.BCRADESIGN.COM
2106 PACIFIC AVENUE, SUITE 300, TACOMA, WA 98402

SEAL

FOR COORDINATION

LUND OPSAHL
1215 Fourth Avenue, Suite 1200
Seattle, Washington 98161
206-402-5156 www.lundopsahl.com

PROJECT
PORT OF EVERETT
WINE WALK BUILDING A12
XXXX SEINER DRIVE
EVERETT, WASHINGTON 98201

REVISIONS

DATE
12/13/2023

BCRA NO.
23045.00.00

DRAWN BY: JK

REVIEWED BY:

SHEET TITLE
MECHANICAL WELL TOP OF FRAMING PARTIAL PLAN

bcra
© COPYRIGHT 2023 - BCRA, INC. ALL RIGHTS RESERVED

SHEET
S-124

100% DD Set

IF SHEET MEASURES LESS THAN 22"X34", IT IS A REDUCED PRINT. REDUCE SCALE ACCORDINGLY

22x34 12/13/2023 1:20:28 PM

REINFORCING BAR LAP SPLICE & DEVELOPMENT LENGTH DIAGRAMS

The following conditions must be met in order to use the Reinforcing Bar Lap Splice & Development Length Tables

	Lap Splices	Straight Bar Development	Hooked Bar Development
CLASS 1: Bars enclosed by column ties or beam stirrups	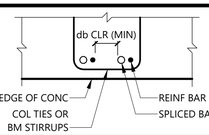	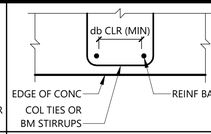	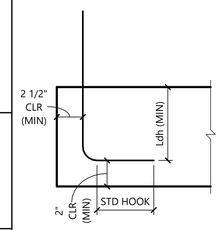
CLASS 2: No enclosure	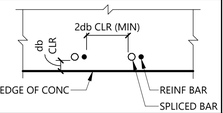	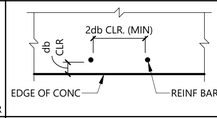	
Where conditions for Classes 1 & 2 are not met	Multiply lengths shown in schedule by 1.5	Multiply lengths shown in schedule by 1.5	

NOTES:
1. ALL BARS SHALL BE DEVELOPED & ALL SPLICES LAPPED PER ACE 318 FOR TENSION, UNO. TABLE MAY BE USED WHERE CONDITIONS MEET CRITERIA NOTED IN DIAGRAMS.
2. TABLES ARE APPLICABLE FOR NORMAL WEIGHT CONCRETE, ONLY.
3. TOP BARS ARE HORIZONTAL BARS WITH MORE THAN 12" DEPTH OF CONCRETE CAST BELOW THEM. (WALL HORIZONTAL REINFORCEMENT IS EXEMPT).
4. WHERE BARS OF DIFFERENT SIZE ARE LAP SPLICED, SPLICE LENGTH SHALL BE THE LARGER OF:
   A. DEVELOPED LENGTH OF LARGER BAR
   B. SPLICE LENGTH OF SMALLER BAR
5. WHERE MINIMUM STRAIGHT BAR DEVELOPMENT LENGTH CANNOT BE ACHIEVED, USE WITH STANDARD HOOK.
6. REFER TO CONCRETE COVER TABLE FOR MINIMUM CONCRETE COVER REQUIREMENTS.

REINFORCING BAR LAP SPLICE & DEVELOPMENT LENGTH TABLE

f'c = 4,000 psi Grade 60 Reinforcing

Bar Size	Min Lap Splice Lengths (Ls)		Min Straight Bar Development Lengths (Ld)		Min Hooked Bar Embedment Lengths (Ldh)
	Top Bars	Other Bars	Top Bars	Other Bars	
#3	25"	19"	19"	15"	8"
#4	32"	25"	25"	19"	10"
#5	41"	31"	31"	24"	12"
#6	49"	37"	37"	29"	15"
#7	71"	54"	54"	42"	17"
#8	81"	62"	62"	48"	19"
#9	91"	70"	70"	54"	22"
#10	102"	79"	79"	61"	25"
#11	114"	87"	87"	67"	27"

CONCRETE COVER FOR REINFORCING STEEL

Reinforcing Bar Location	Minimum Concrete Cover
Unformed surfaces cast against and permanently exposed to earth	3"
Formed surfaces exposed to earth or weather (#6 bars and larger)	2"
Formed surfaces exposed to earth or weather (#5 bars and smaller)	1 1/2"
Columns and beams w/ bars enclosed in stirrups, ties or spiral reinforcement	1 1/2"
Slabs, joists and interior faces of walls (#11 bars and smaller)	3/4"
2-hour and 3-hour slabs	(Refer to plan notes)
Clear spacing between longitudinal bars in columns and boundary elements	1 1/2" or 1.5db
Clear spacing between parallel bars in a layer	1" or db
Clear spacing between (2) or more parallel layers	1"

Notes:
1. Where a thickness of cover required for fire protection is greater than that specified in this table, the greater thickness shall be used.
2. Where two values are shown, the greater shall be used.

Reinforcing Bar Lap Splice & Development Length Tables

Scale: NTS

4 Concrete Cover for Reinforcing Steel

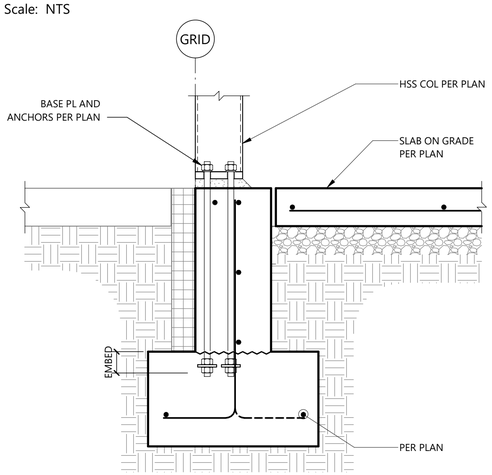

NOTES:
1. SEE 9/S-302 FOR INFORMATION NOT SHOWN.

5 Typical HSS Column Footing at Slab Edge

SCALE: 1 1/2" = 1'-0"

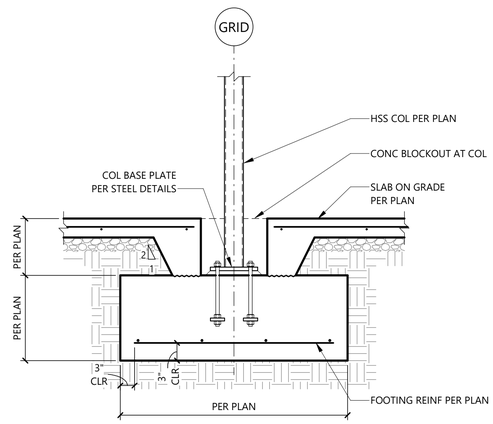

6 Typical HSS Column Footing with Blockout

Scale: 3/4" = 1'-0"

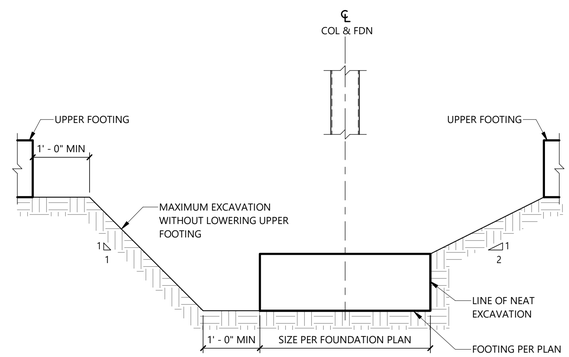

7 Typical Footing Excavation

Scale: 3/4" = 1'-0"

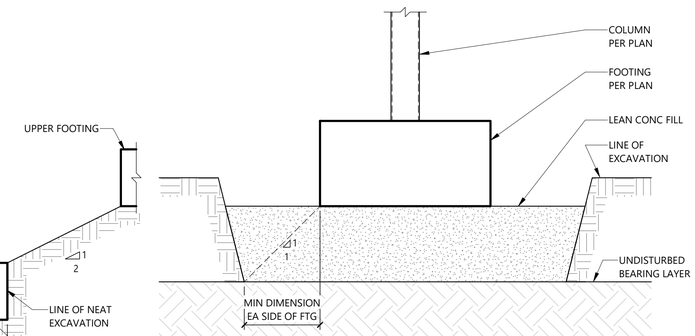

8 Typical Lean Concrete Backfill Below Footings

Scale: 3/4" = 1'-0"

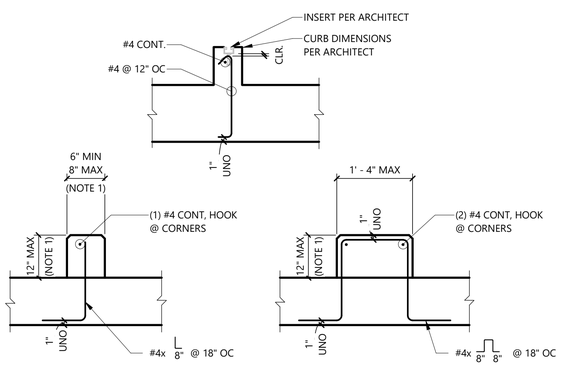

Curbs

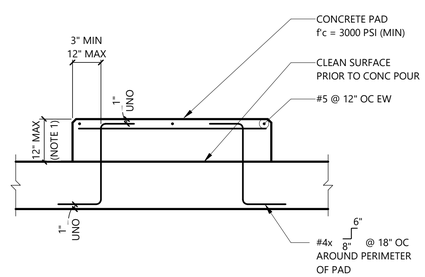

Equipment Pads

NOTES:
1. VERIFY ALL DIMENSIONS WITH MECHANICAL, ELECTRICAL, AND ARCHITECTURAL DRAWINGS.
2. EQUIPMENT PAD SIZE TO BE 6" LARGER THAN EQUIPMENT IN EACH DIRECTION, UNO. COORDINATE EXACT SIZE AND LOCATION OF CURB AND PADS WITH EQUIPMENT PROVIDED.
3. TYPICAL SLAB REINFORCING NOT SHOWN.
4. WHEN CURB HEIGHT EXCEEDS 12" USE TYPICAL SHORT WALL DETAIL

9 Typical Curbs and Pads on Concrete Slabs

NTS

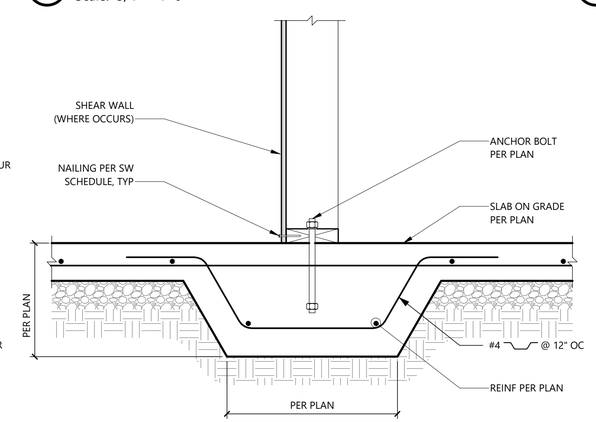

11 Typical Strip Footing with Thickened Slab

Scale: 1 1/2" = 1'-0"

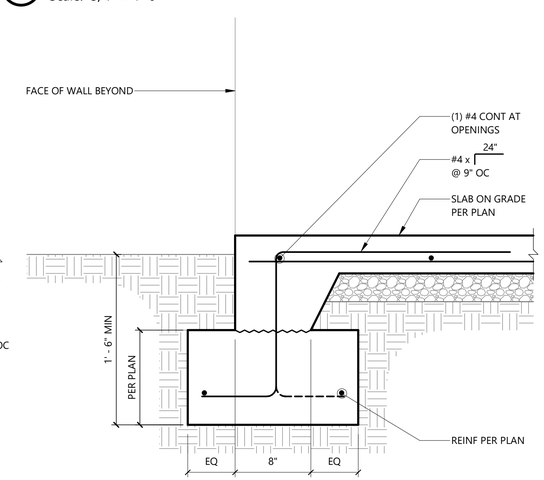

12 Typical Stem Wall Footing at Wall Opening

Scale: 1 1/2" = 1'-0"

bcra
T 253.627.4367 F 253.627.4395 WWW.BCRADESIGN.COM
2108 PACIFIC AVENUE, SUITE 300, TACOMA, WA 98402

SEAL

FOR COORDINATION

LUND OPSAHL
1215 Fourth Avenue, Suite 1200
Seattle, Washington 98161
206-402-5156 www.lundopsahl.com

PROJECT
PORT OF EVERETT
WINE WALK BUILDING A12
XXXX SEINER DRIVE
EVERETT, WASHINGTON 98201

REVISIONS

DATE 12/13/2023
BCRA NO. 23045.00.00
DRAWN BY: JK
REVIEWED BY:
SHEET TITLE
STRUCTURAL CONCRETE DETAILS

bcra

© COPYRIGHT 2023 - BCRA, INC. ALL RIGHTS RESERVED

SHEET
S-301

100% DD Set

IF SHEET MEASURES LESS THAN 22"X34", IT IS A REDUCED PRINT. REDUCE SCALE ACCORDINGLY

22x34 12/13/2023 1:20:28 PM

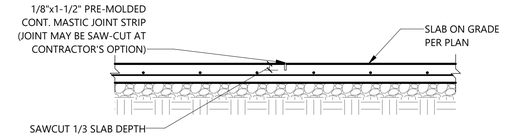

Control Joint

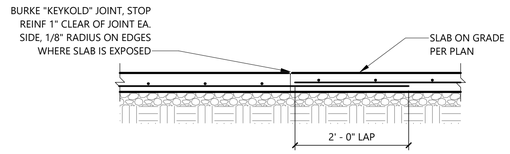

Construction Joint

NOTES:
1. SAWED JOINTS SHALL BE MADE AS SOON AS THE JOINT CAN BE CUT WITHOUT EDGES RAVELING AND WITHIN 24 HOURS OF SLAB PLACEMENT.
2. SAWED JOINTS SHALL BE FITTED WITH SEALANT AS COORDINATED WITH THE ARCHITECT.

2 Typical Joints in Slab on Grade
Scale: 3/4" = 1'-0"

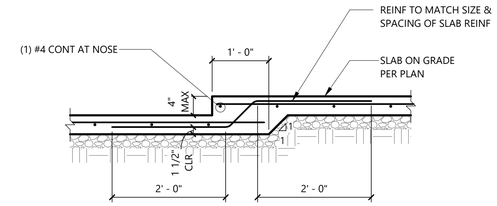

3 Typical Depressed Slab
Scale: 3/4" = 1'-0"

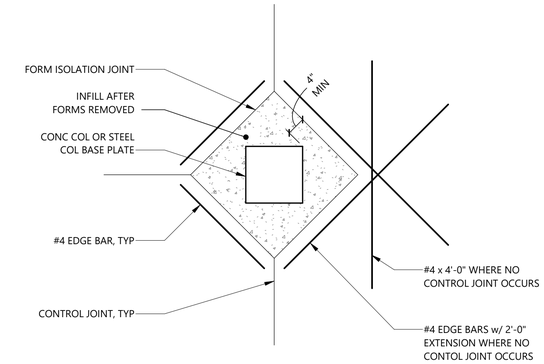

4 Typical Slab on Grade Isolation Joint at Column
Scale: 3/4" = 1'-0"

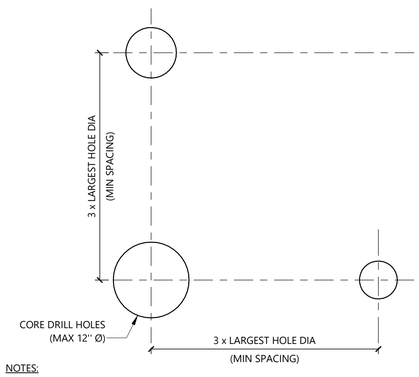

NOTES:
1. WALL / SLAB REINF NOT SHOWN.
2. CONTRACTOR SHALL SUBMIT PROPOSED LOCATIONS & SIZES OF DRILLED HOLES TO THE ARCHITECT FOR REVIEW PRIOR TO DRILLING.
3. MAXIMUM CORE DRILLED HOLE IS 12-INCH DIAMETER.
4. CONTRACTOR TO VERIFY THAT PROPOSED CORE DRILLED HOLES DO NOT OCCUR DIRECTLY BELOW CONCENTRATED LOADS SUCH AS POST OR BEAMS.

5 Typical Core Drilling Existing Walls and Slabs
NTS

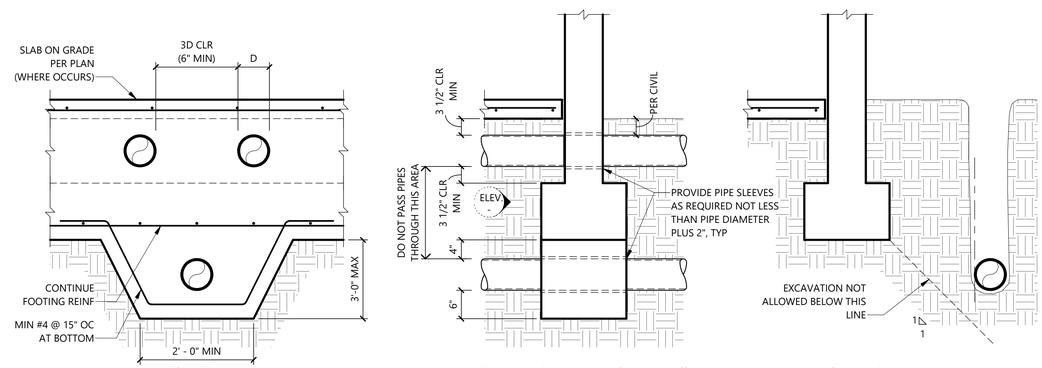

NOTES:
1. USE THIS DETAIL FOR ALL UTILITIES PASSING UNDER OR ADJACENT TO FOOTING.
2. STEP FOOTING DOWN TO PASS BELOW PIPES IF NEEDED.

6 Typical Pipe and Trench Locations
Scale: 3/4" = 1'-0"

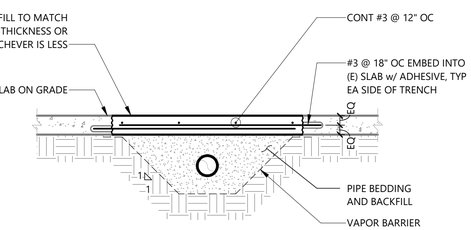

8 Typical Slab Patch at Utility Trench
Scale: 3/4" = 1'-0"

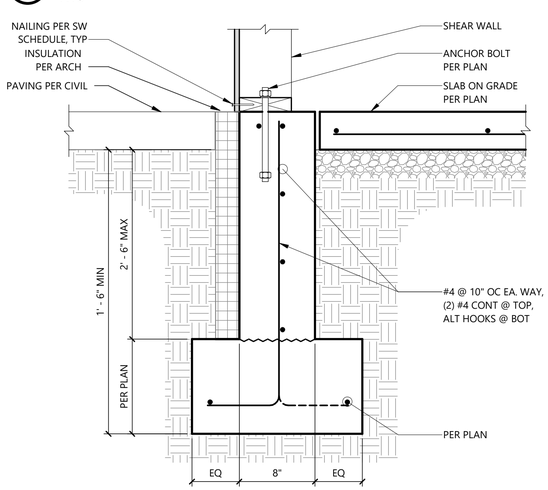

9 Typical Stem Wall with Curb
SCALE: 1 1/2" = 1'-0"

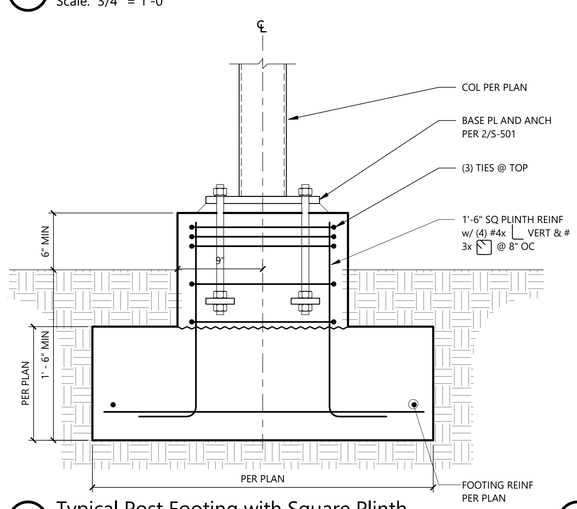

10 Typical Post Footing with Square Plinth
Scale: 1 1/2" = 1'-0"

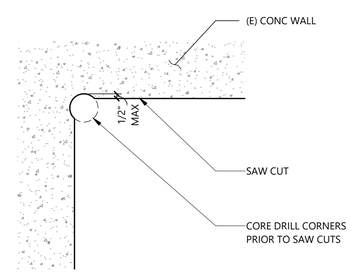

NOTES:
1. WALL REINF NOT SHOWN.
2. CONTRACTOR SHALL SUBMIT PROPOSED LOCATIONS & SIZES OF SAW-CUT OPENINGS TO THE ARCHITECT FOR REVIEW PRIOR TO CUTTING.
3. CORE DRILL SMALLEST HOLE THAT WILL ALLOW SAW CUTTING WITHOUT OVER CUTTING.
4. CONTRACTOR TO VERIFY PROPOSED SAW-CUT OPENING LOCATIONS CLEAR COLUMNS / PILASTERS.
5. MULTIPLE OPENINGS SHALL BE SPACED 3x LARGEST OPENING ON CENTER.

11 Typical Sawcut at Corners
NTS

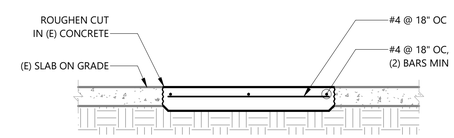

12 Typical Patching at Slab on Grade
Scale: 3/4" = 1'-0"

22x34 12/13/2023 1:20:28 PM

IF SHEET MEASURES LESS THAN 22"X34", IT IS A REDUCED PRINT. REDUCE SCALE ACCORDINGLY

bcra
T 253.627.4367 F 253.627.4395 WWW.BCRADESIGN.COM
2108 PACIFIC AVENUE, SUITE 300, TACOMA, WA 98402

SEAL

FOR COORDINATION

LUND OPSAHL
1215 Fourth Avenue, Suite 1200
Seattle, Washington 98161
206-402-5156 www.lundopsahl.com

PROJECT
PORT OF EVERETT
WINE WALK BUILDING A12
XXXX SEINER DRIVE
EVERETT, WASHINGTON 98201

REVISIONS

DATE 12/13/2023
BCRA NO. 23045.00.00
DRAWN BY: JK
REVIEWED BY:
SHEET TITLE
STRUCTURAL CONCRETE DETAILS

bcra
© COPYRIGHT 2023 - BCRA, INC. ALL RIGHTS RESERVED
SHEET
S-302
100% DD Set

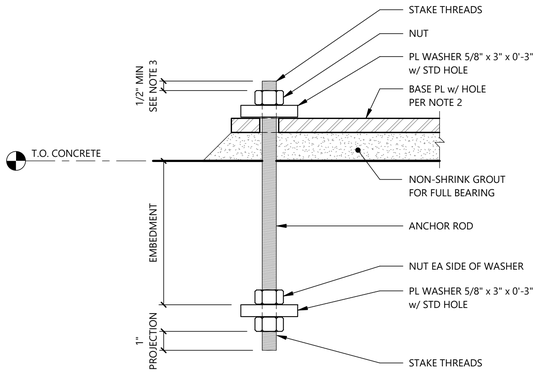

NOTES:
1. AT CONTRACTOR'S OPTION, LEVELING NUTS AND PLATE WASHERS MAY BE FURNISHED.
2. MAXIMUM HOLE SIZES: 1-5/16" FOR 3/4"Ø ROD; 1-13/16" FOR 1"Ø ROD; 2" FOR 1-1/2"Ø ROD.
3. VERIFY SUFFICIENT THREAD ENGAGEMENT TO DEVELOP STRENGTH OF BOLT.

1 Typical Anchor Rod
Scale: 3" = 1'-0"

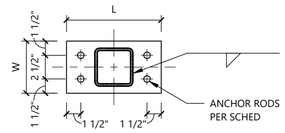

BP-1

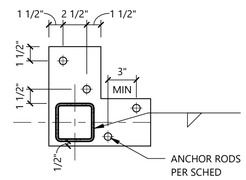

BP-3

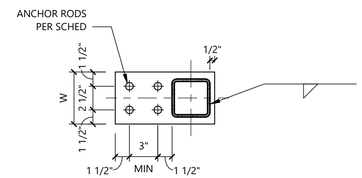

BP-2

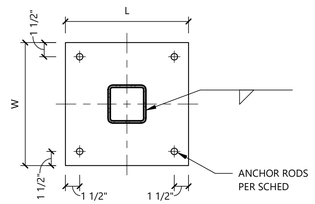

BP-4

BASE PLATE SCHEDULE

Base Plate Configuration	Size				Connection
	Length (L)	Width (W)	Thickness	Weld Size	
BP-1	1'-0"	5-1/2"	3/4"	3/16"	(4) 5/8"Ø F1554 GR 36 ANCHOR RODS w/ 6" EMBED
BP-2	-	5-1/2"	3/4"	3/16"	(4) 5/8"Ø F1554 GR 36 ANCHOR RODS w/ 6" EMBED
BP-3	-	5-1/2"	3/4"	3/16"	(4) 5/8"Ø F1554 GR 36 ANCHOR RODS w/ 6" EMBED
BP-4	1'-0"	1'-0"	3/4"	3/16"	(4) 5/8"Ø F1554 GR 36 ANCHOR RODS w/ 6" EMBED

2 HSS Column Base Plate Configurations
NTS

BEAM SHEAR TAB CONNECTION TABLE

Beam Size		Required Number of 7/8" Diameter A325 Bolts
Wide Flange	Channel	
W8, W10	C10	2
W12, W14	C12	3
W16, W18	C15	4
W21	-	5
W24	-	6

NOTES:
1. SEE BEAM LEGEND FOR BEAM CONNECTION DESIGNATIONS SHOWN ON PLANS
2. SEE PLANS FOR BEAM SIZES AND SPECIAL CONNECTIONS WHERE NOTED
3. ALL BEAM-TO-BEAM CONNECTIONS ON EXTERIOR WALLS SHALL USE "TYPICAL FULL-DEPTH BEAM CONNECTION"
4. HORIZONTAL SHORT SLOTTED HOLES (SSL) MAY BE USED IN SHEAR TABS AT CONTRACTORS OPTION, UNO

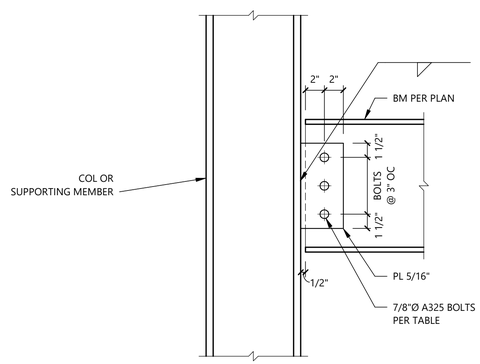

Detail A:
Single Plate Beam to Column Flange Connection

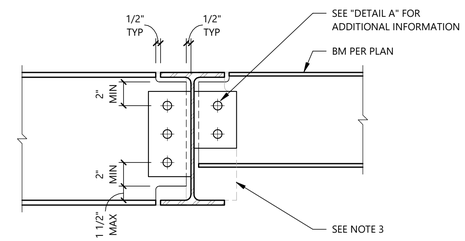

Detail B:
Single Plate Beam to Beam Connection

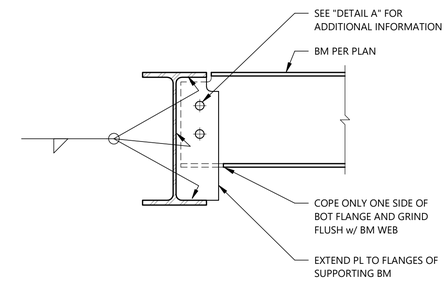

Detail C:
Full-Depth Beam Connection

5 Typical Beam Shear Tab Connection
NTS

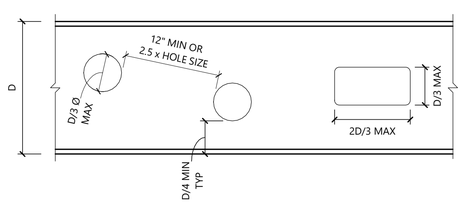

NOTES:
1. OPENINGS MAY OCCUR IN MIDDLE HALF OF BEAM LENGTH ONLY.
2. NO OPENINGS SHALL OCCUR WITHIN 12" OF AN ADJACENT BEAM CONNECTION.
3. CONTRACTOR SHALL COORDINATE SIZES AND LOCATIONS OF ALL BEAM PENETRATIONS WITH MECHANICAL DRAWINGS.
4. ALL PENETRATIONS LARGER THAN 2"Ø AND SPACED CLOSER THAN 3x DIAMETER SHALL BE SHOWN ON SHOP DRAWINGS OR SKETCHES AND SHALL BE SUBMITTED TO THE ENGINEER FOR APPROVAL.
5. FIELD CUTTING NOT PERMITTED WITHOUT APPROVAL.
6. REQUIRED OPENINGS NOT MEETING ABOVE CRITERIA SHALL BE SUBMITTED TO ENGINEER FOR REINFORCING DESIGN.

9 Typical Beam Web Penetrations
NTS

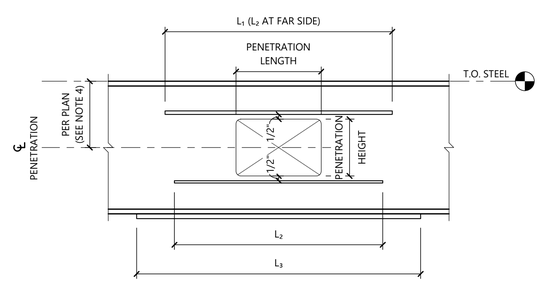

Elevation

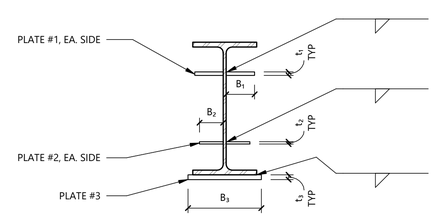

Section

BEAM WEB PENETRATION SCHEDULE

Mark	Plate #1		Plate #2		Plate #3		Remarks
	Size (t_1 x B_1 x L_1)	Weld (W_1)	Size (t_2 x B_2 x L_2)	Weld (W_2)	Size (t_3 x B_3 x L_3)	Weld (W_3)	
(A)	XX x XX" x X'-X"	XX	-	-	-	-	-

NOTES:
1. FOR PENETRATIONS CUT IN FIELD: INSTALL ALL PLATES AND COMPLETE ALL WELDING PRIOR TO CUTTING PENETRATION.
2. ALL STEEL PLATES SHALL BE Fy = 50 ksi, UNO.
3. EXTEND DOUBLER PLATE TO END OF BEAM IF CENTER LINE OF OPENING IS WITHIN 3'-0" FROM END OF BEAM.
4. PENETRATIONS SHOWN ON PLANS WITHOUT DIMENSIONS FROM TOP OF STEEL SHALL BE LOCATED AT CENTER OF BEAM.
5. REFER TO BEAM WEB PENETRATION SCHEDULE FOR SIZES.

10 Typical Beam Web Penetrations with Reinforcement
Scale: 1 1/2" = 1'-0"

22x34 12/13/2023 1:20:29 PM

IF SHEET MEASURES LESS THAN 22"X34", IT IS A REDUCED PRINT. REDUCE SCALE ACCORDINGLY

bcra
T 253.627.4367 F 253.627.4395 WWW.BCRADESIGN.COM
2106 PACIFIC AVENUE, SUITE 300, TACOMA, WA 98402

SEAL

FOR COORDINATION

LUND OPSAHL
1215 Fourth Avenue, Suite 1200
Seattle, Washington 98161
206-402-5156 www.lundopsahl.com

PROJECT
PORT OF EVERETT
WINE WALK BUILDING A12
XXXX SEINER DRIVE
EVERETT, WASHINGTON 98201

REVISIONS

DATE 12/13/2023
BCRA NO. 23045.00.00
DRAWN BY: JK
REVIEWED BY:
SHEET TITLE
STRUCTURAL STEEL DETAILS

bcra
© COPYRIGHT 2023 - BCRA, INC. ALL RIGHTS RESERVED

SHEET
S-501

100% DD Set

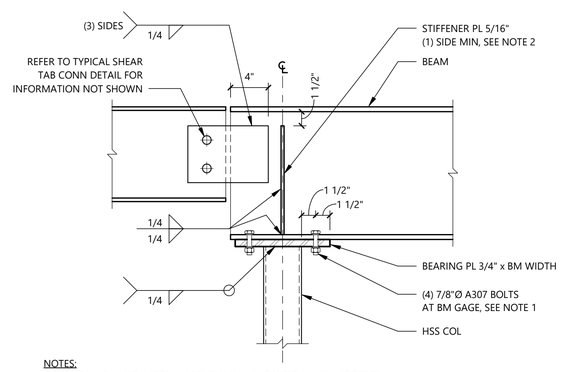

NOTES:
1. IF BEAM FLANGE WIDTH IS LESS THAN 6", USE WELD IN LIEU OF BOLTS.
2. CONTRACTOR OPTION TO EXTEND INCOMING BEAM SHEAR TAB PLATE AND WELD TO BOTTOM FLANGE IN PLACE OF STIFFENER PLATE

6 Typical Beam over HSS Column Connection
Scale: 1 1/2" = 1'-0"

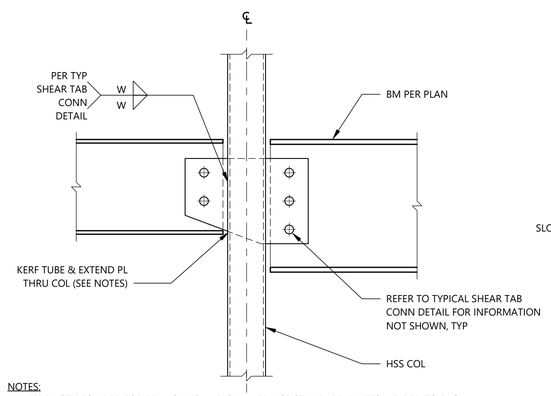

NOTES:
1. KERF NOT REQUIRED FOR BEAMS W12 AND SMALLER, USE STANDARD PLATES WELDED TO EACH FACE OF TUBE.
2. WELD PLATE TO HSS FACE AT TUBE CORNERS; NO KERF REQUIRED.

7 Typical Beam to Continuous HSS Column
Scale: 1 1/2" = 1'-0"

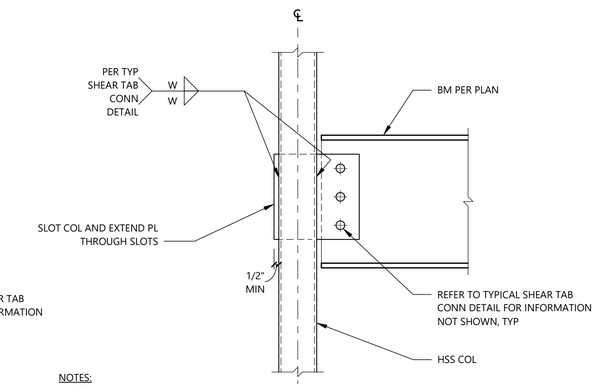

NOTES:
1. USE SINGLE PLATE WHERE BEAMS OCCUR ON BOTH SIDES OF COLUMN.
2. KERF NOT REQUIRED FOR BEAMS W12 AND SMALLER, USE STANDARD PLATES WELDED TO EACH FACE OF TUBE.
3. WELD PLATES TO HSS FACES AT TUBE CORNERS; NO KERF REQUIRED.

8 Typical Beam to Continuous HSS Column - One Side
Scale: 1 1/2" = 1'-0"

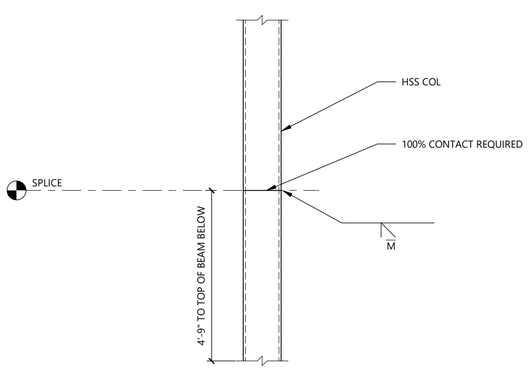

NOTES:
1. CONTRACTOR TO PROVIDE ALL ERECTION AND STABILITY AIDS.

9 Typical HSS Column Splice Exposed to View
Scale: 1 1/2" = 1'-0"

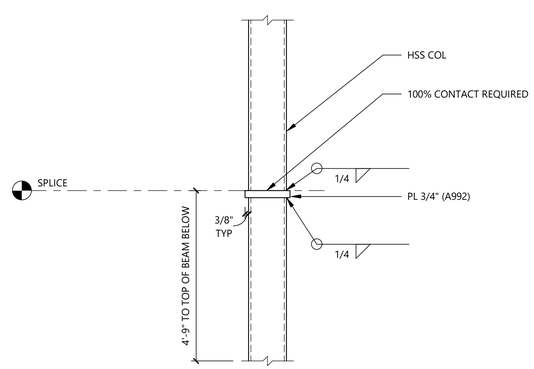

NOTES:
1. CONTRACTOR TO PROVIDE ALL ERECTION AND STABILITY AIDS.

10 Typical HSS Column Splice Not Exposed
Scale: 1 1/2" = 1'-0"

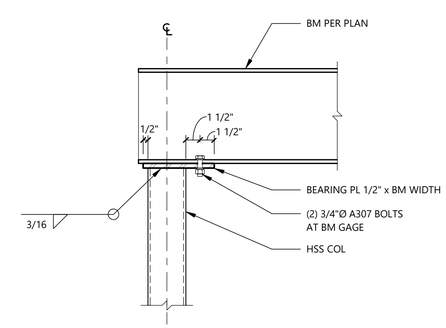

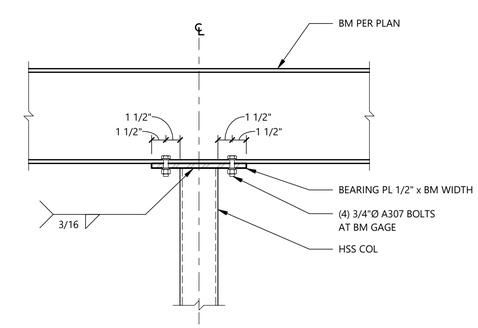

11 Typical Wide Flange Beam over HSS Column
Scale: 1 1/2" = 1'-0"

22x34 12/13/2023 1:20:29 PM

IF SHEET MEASURES LESS THAN 22"X34", IT IS A REDUCED PRINT. REDUCE SCALE ACCORDINGLY

bcra
T 253.627.4367 F 253.627.4395 WWW.BCRADESIGN.COM
2108 PACIFIC AVENUE, SUITE 300, TACOMA, WA 98402

SEAL

FOR COORDINATION

LUND OPSAHL
1215 Fourth Avenue, Suite 1200
Seattle, Washington 98161
206-402-5156 www.lundopsahl.com

PROJECT
PORT OF EVERETT
WINE WALK BUILDING A12
XXXX SEINER DRIVE
EVERETT, WASHINGTON 98201

REVISIONS

DATE 12/13/2023
BCRA NO. 23045.00.00
DRAWN BY: JK
REVIEWED BY:
SHEET TITLE
STRUCTURAL STEEL DETAILS

bcra
© COPYRIGHT 2023 - BCRA, INC. ALL RIGHTS RESERVED

SHEET
S-502

100% DD Set

GENERAL CONTRACTOR TO VERIFY RIM PLACEMENT WITH JOIST HANGER LAYOUT

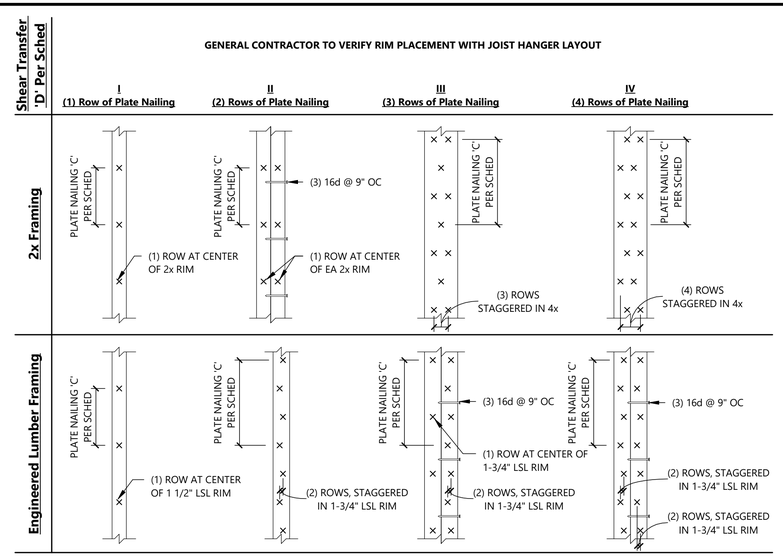

1 Typical Sill Plate to Rim/Joist/Blocking Nailing

Scale: 1 1/2" = 1'-0"

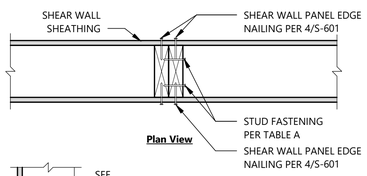

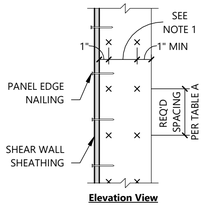

TABLE A

Shear Wall Mark	Stud Fastening
SW4	(2) Rows 16d @ 4" OC
SW3	(3) Rows 16d @ 4 1/2" OC
SW2	(2) Rows 1/4"Ø x 3" SDS @ 4 1/2" OC
SW3-2	(2) Rows 1/4"Ø x 3" SDS @ 3" OC
SW2-2	N/A

Note:
1. 3" for SDS screws, 1-1/2" for 16d nails.

2 Alternative Built-up 2x Option at Abutting Panel Edge

Scale: 1 1/2" = 1'-0"

ROUGH WINDOW SILL SCHEDULE

Horiz Rough Opening	Number of Sills Req'd	End Attachment	Reference
0'-0" to 6'-0"	1	(2) 16d end nails	7/S-601
> 6'-0"	2	(2) 16d end nails + A35 each end @ each sill	7/S-601

5 Typical Rough Window Sill Schedule

HEADER END NAILING SCHEDULE

Nominal Depth	End Attachment
4	(4) 16d
6	(6) 16d
8	(8) 16d
10	(10) 16d
12	(12) 16d
14	(14) 16d
16	(16) 16d
18	(18) 16d

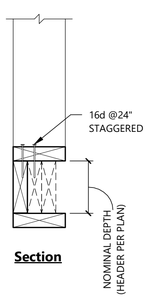

6 Header End Nailing

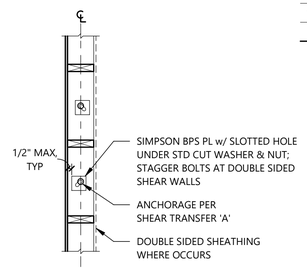

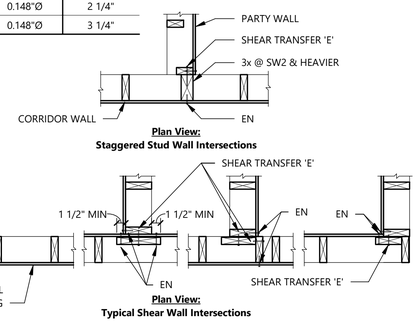

3 Typical Shear Wall Intersections & Anchorage Requirements

Scale: 3/4" = 1'-0"

MINIMUM FASTENING SCHEDULE (UNO) (PER IBC 2015, TABLE 2304.10.01)

No.	Connection	Nailing, Location UNO
1	Blocking between joist/rafter or trusses to top plate or other framing above	(3) 8d, toenail each end
2	Blocking between joist/rafter or trusses not at the wall top plate, to rafter or truss	(2) 8d, toenail each end
3	Flat blocking to truss and web filler	16d face nail
4	Joists to top plate or girder	(3) 8d, toenail
5	Ceiling joist not attached to parallel rafter, laps over partitions (no thrust)	(3) 16d
6	Collar tie to joist/rafter	(3) 10d
7	Roof truss to top plate	(3) 10d, toenail
8	Roof joist/rafter to ridge valley or hip rafters; or roof rafter to 2" ridge beam	(2) 16d, end nail
9	Stud to stud (not at shear walls)	16d @ 24" O.C., face nail
10	Continuous header to stud	(4) 8d, toenail
11	Top plate to top plate, at end joints	(8) 16d, Each side of end joint, face nail (minimum 24" lap splice length each side of end joint)
12	Sill plate to joist, rim joist or blocking (not at braced wall panels)	16d @ 16" OC, face nail
13	Sill plate to joist, rim joist or blocking at braced wall panels	(3) 16d @ 16" OC, face nail
14	Stud to sill plate	(4) 8d, toenail OR (2) 16d, end nail*
15	Top plate to stud	(2) 16d, end nail
16	Top plates, laps at corners and intersections	(2) 16d, face nail
17	1" brace to each stud and plate	(2) 8d, face nail
18	1" x 6" sheathing or less to each bearing	(2) 8d, face nail
19	1" x 8" and wider sheathing to each bearing	(3) 8d, face nail
20	Joist to sill, top plate or girder	(3) 8d, toenail
21	Rim joist, or blocking to top plate, sill or other framing below	8d @ 6" OC, toenail
22	1" x 6" subfloor or less to each joist	(2) 8d, face nail
23	2" subfloor to joist or girder	(2) 16d, blind and face nail
24	2" planks (plank & beam - floor & roof)	(2) 16d, each bearing, face nail
25	Built-up girders and beams, 2" lumber layers	20d @ 32" OC, face nail at top and bottom staggered on opposite sides and (2) 20d at ends and at each splice
26	Ledger strip supporting joists or rafters	(3) 16d, each joist or rafter, face nail
27	Joist to rim joist	(3) 16d, end nail
28	Bridging or blocking to joist	(2) 8d, each end, toenail

*Use (4) 16d end nail studs to top and sill plates at 2x10 studs

SHEAR WALL SCHEDULE (DOUG FIR FRAMING)

Mark	Sheathing (15/32" Plywood)	Nailing (EN) Edge	Nailing Field	Framing Min Stud & Blkg at Panel Edges	Framing Sill Plate	Framing Top Plates	Shear Transfer (A) Sill Pl to Concrete	(B) Rim/Joist/Blkg to Top Pl	(C) Sill Pl To Rim/Joist/Blkg	(D) Rim Below Sill Pl	(E) Shearwall Intersections	Capacity (ASD) Seismic	Capacity (ASD) Wind
SW6	(1) Side	10d @ 6"	10d @ 12"	2x	2x	(2)2x	5/8"Ø Anchor Bolt @ 41"	A35 @ 26" or LTP4 @ 20"	16d @ 4" or 1/4"Ø x 6" SDS screw @ 14"	I	16d @ 4" or 1/4"Ø x 6" SDS screw @ 13"	310 plf	435 plf
SW4	(1) Side	10d @ 4"	10d @ 12"	3x	2x	(2)2x	5/8"Ø Anchor Bolt @ 27"	A35 @ 18" or LTP4 @ 13"	(2) Rows 16d @ 6" or 1/4"Ø x 6" SDS screw @ 9"	II or I	(2) ROWS 16d @ 6" or 1/4"Ø x 6" SDS screw @ 8"	460 plf	645 plf
SW3	(1) Side	10d @ 3"	10d @ 12"	3x	2x	(2)2x	5/8"Ø Anchor Bolt @ 21"	A35 @ 13" or LTP4 @ 10"	(2) Rows 16d @ 5" or 1/4"Ø x 6" SDS screw @ 7"	II or I	(2) ROWS 16d @ 5" or 1/4"Ø x 6" SDS screw @ 6"	600 plf	840 plf
SW2	(1) Side	10d @ 2"	10d @ 12"	3x	2x	(2)2x	5/8"Ø Anchor Bolt @ 16"	A35 @ 10" or LTP4 @ 7"	(3) Rows 16d @ 6" or (2) Rows 1/4"Ø x 6" SDS screws @ 10"	III or II	1/4"Ø x 6" SDS screw @ 5"	770 plf	1078 plf
SW4-2	(2) Sides	10d @ 4"	10d @ 12"	3x	3x	(2)2x	5/8"Ø Anchor Bolt @ 15"	A35 + LTP4 @ 13"	(3) Rows 16d @ 5" or (2) Rows 1/4"Ø x 6" SDS screws @ 9"	III or II	1/4"Ø x 6" SDS screw @ 4"	920 plf	1288 plf
SW3-2	(2) Sides	10d @ 3"	10d @ 12"	3x	3x	(2)2x	5/8"Ø Anchor Bolt @ 15"	A35 + LTP4 @ 10"	(4) Rows 16d @ 5" or (2) Rows 1/4"Ø x 6" SDS screws @ 7"	IV or II	1/4"Ø x 6" SDS screw @ 3"	1200 plf	1680 plf
SW2-2	(2) Sides	10d @ 2"	10d @ 12"	3x	3x	(2)2x	5/8"Ø Anchor Bolt @ 12"	A35 + LTP4 @ 8"	(4) Rows 16d @ 4" or (3) Rows 1/4"Ø x 6" SDS screws @ 8"	IV or III	1/4"Ø x 6" SDS screw @ 2"	1540 plf	2155 plf

SHEAR WALL SCHEDULE NOTES:

1. In addition to framing requirements of 7/S-601, provide framing at shear walls as indicated.
2. See schedule for sheathing and nailing requirements. Lumber grade as indicated or better. Stagger panel joint each side of wall where sheathing is required both sides of wall.
3. All framing members receiving edge nailing from abutting panel edges shall not be less than sizes indicated. In lieu of 3x studs, built-up studs shown in 2/S-601 may be substituted.
4. Block all panel edges.
5. Nail sizes per nail size table. Drive all nails flush with face of sheathing. Tolerance +1/16" to -0. Stagger nailing where necessary to prevent splitting of lumber.
6. Plates on concrete shall be treated. See general notes.
7. Connect sheathing & studs at shear wall intersections as indicated.
8. The plans and sections shown here schematically demonstrate the typical connection designed by the Engineer of Record. Alternate connections must be approved in writing by the Engineer prior to construction.

TYPICAL NAIL LENGTH TABLE

Nail Size	Nail Diameter	Typical Nail Length (UNO)
6d Common	0.113"Ø	2"
8d Common	0.131"Ø	2 1/2"
10d Common	0.148"Ø	2 1/4"
16d Sinker	0.148"Ø	3 1/4"

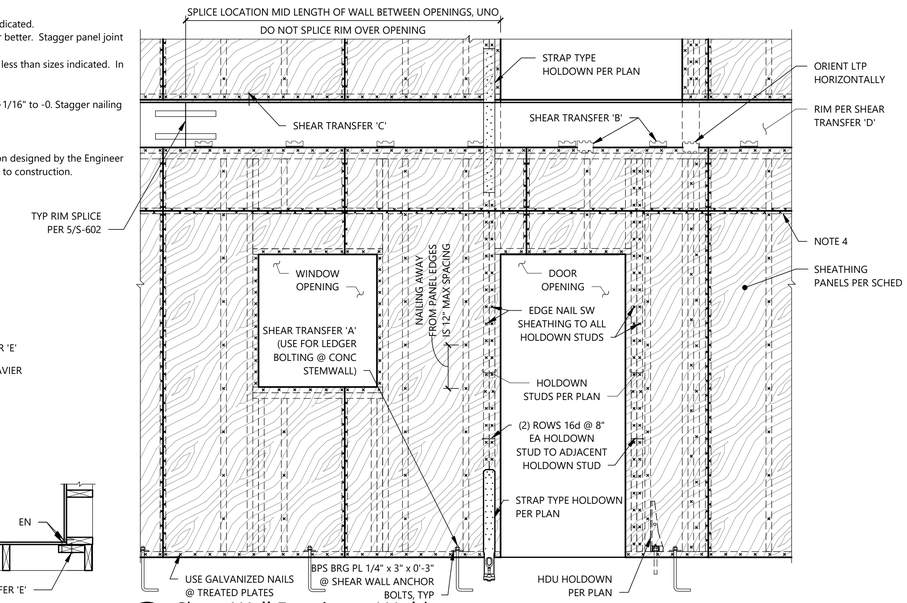

4 Shear Wall Framing w/ Holdowns

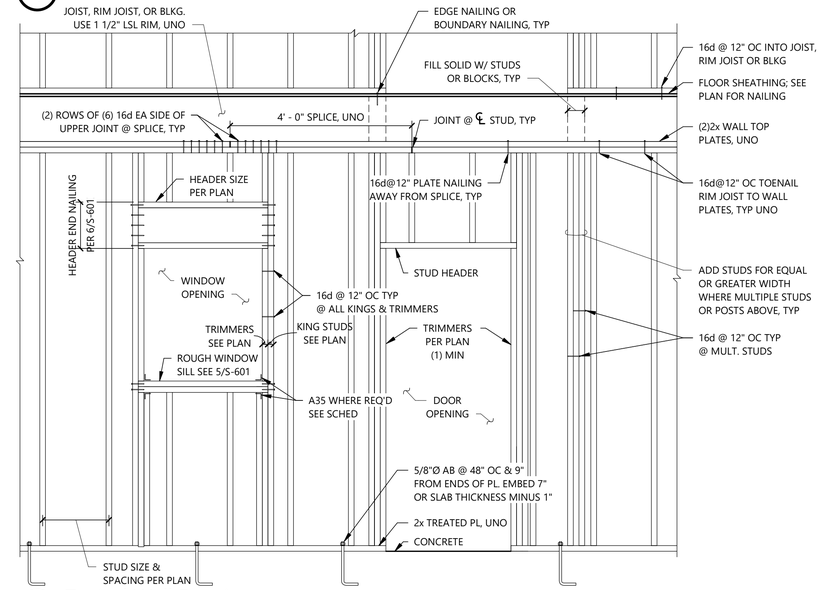

7 Typical Wall Framing

bcra
T 253.627.4367 F 253.627.4395 WWW.BCRADESIGN.COM
2108 PACIFIC AVENUE, SUITE 300, TACOMA, WA 98402

SEAL

FOR COORDINATION

LUND OPSAHL
1215 Fourth Avenue, Suite 1200
Seattle, Washington 98161
206-402-5156 www.lundopsahl.com

PROJECT
PORT OF EVERETT
WINE WALK BUILDING A12
XXXX SEINER DRIVE
EVERETT, WASHINGTON 98201

REVISIONS

DATE 12/13/2023
BCRA NO. 23045.00.00
DRAWN BY: JK
REVIEWED BY:
SHEET TITLE
STRUCTURAL WOOD DETAILS

bcra

© COPYRIGHT 2023 - BCRA, INC. ALL RIGHTS RESERVED

SHEET
S-601

100% DD Set

IF SHEET MEASURES LESS THAN 22"X34", IT IS A REDUCED PRINT. REDUCE SCALE ACCORDINGLY

22c04 12/13/2023 1:20:36 PM

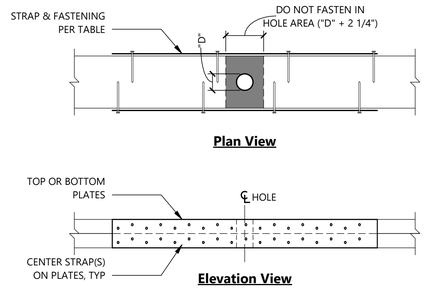

REINFORCING AT TOP PLATES PENETRATION

Plate Size	Hole Diameter "D" Inches	Strap
2x4	0" < "D" < 1"	No strap required
	1" < "D" < 2 1/4"	CMSTC16 w/ (8) 16d sinkers each side of hole, each side of plate (2 straps total)
2x6	0" < "D" < 1 3/4"	No strap required
	1 3/4" < "D" < 3 5/8"	CMSTC16 w/ (13) 16d sinkers each side of hole, each side of plate (2 straps total)
2x8	0" < "D" < 2 1/2"	No strap required
	2 1/2" < "D" < 4"	CMSTC16 w/ (14) 16d sinkers each side of hole, each side of plate (2 straps total)
2x10	0" < "D" < 3"	No strap required
	3" < "D" < 6"	CMSTC16 w/ (21) 16d sinkers each side of hole, each side of plate (2 straps total)

1 Typical Reinforcing at Bearing/Shear Wall Plate Penetration

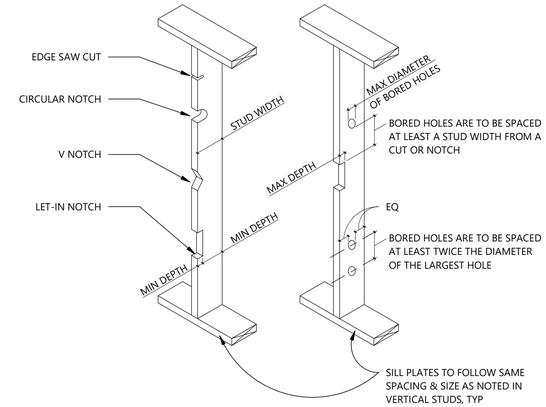

EXTERIOR/BEARING/SHEAR WALL STUDS

Stud Size	Max Depth of Edge Cut or Notch	Min Stud Depth Remaining
2x4	7/8"	2 5/8"
2x6	1 3/8"	4 1/8"

Notes:
1. No cutting or notching is allowed in shear wall compression studs.
2. No cutting or notching is allowed in shear wall plates except as allowed in 1/S-602

NON-BEARING WALL STUDS

Stud Size	Max Depth of Edge Cut or Notch	Min Stud Depth Remaining
2x4	1 3/8"	2 1/8"
2x6	2 1/8"	3 3/8"

EXTERIOR /BEARING /SHEAR WALL STUDS

Stud Size	Max Diameter of Hole	Min Depth Remaining After Boring
2x4	1 3/8"	5/8" Each side of hole
2x6	2 1/8"	5/8" Each side of hole

Notes:
1. Borings shall not be made at the same section where cut or notch has been made.
2. No holes are allowed in shear wall compression studs.
3. No holes are allowed in shear wall plates except as allowed in 1/S-602

NON-BEARING WALL STUDS

Stud Size	Max Diameter of Hole	Min Depth Remaining After Boring
2x4	2"	5/8" Each side of hole
2x6	3 1/4"	5/8" Each side of hole

Notes:
1. Borings shall not be made at the same section where cut or notch has been made.

3 Allowable Holes and Notches in Wood Studs
NTS

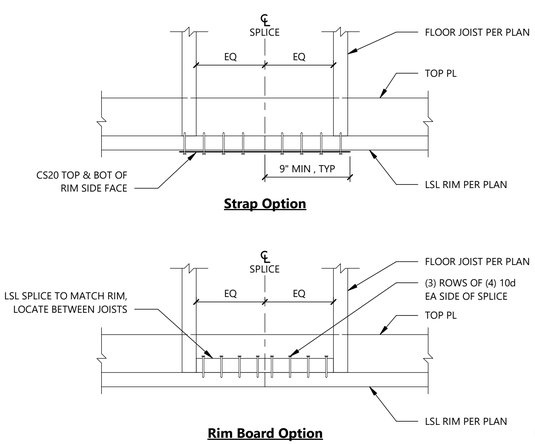

5 Typical Shear Wall Rim Splice
Scale: 1 1/2" = 1'-0"

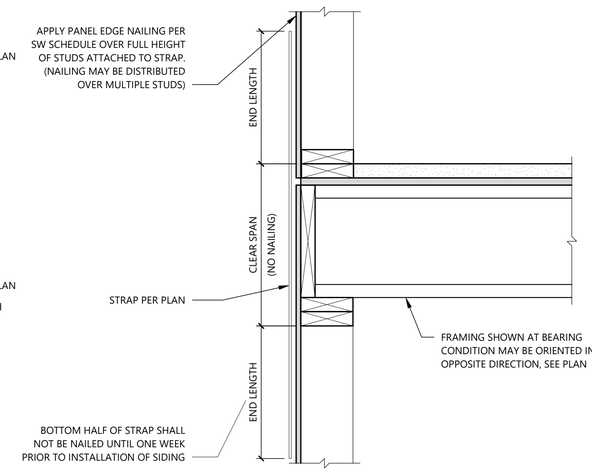

6 Typical Vertical Strap
Scale: 1 1/2" = 1'-0"

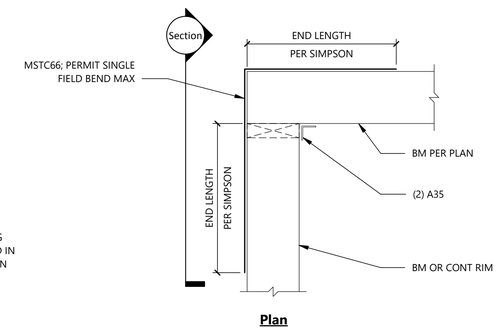

7 Typical Strap at Beam at Corner
Scale: 1 1/2" = 1'-0"

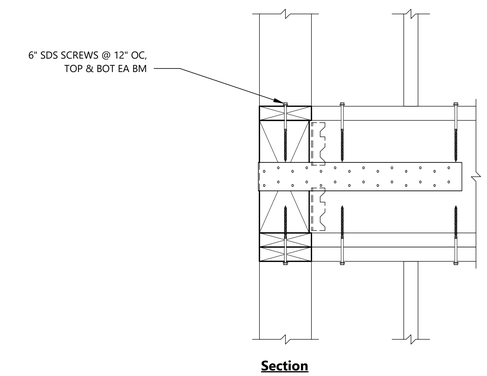

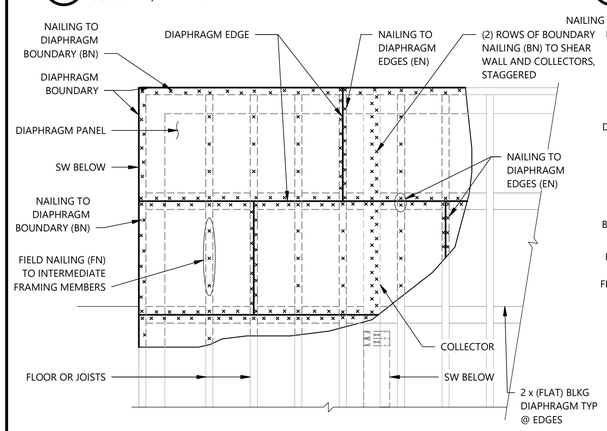

NOTES:
1. BEARING AND SHEAR WALL INTERSECTIONS SHALL BE CONSIDERED DIAPHRAGM BOUNDARIES, TYP

9 Blocked Plywood Roof/Floor Sheathing Layout
Scale: 3/4" = 1'-0"

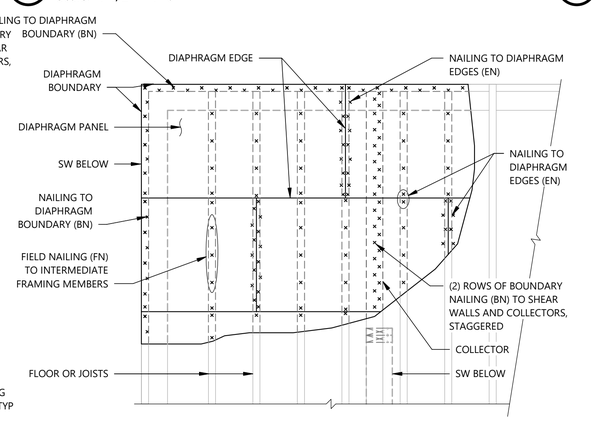

NOTES:
1. BEARING AND SHEAR WALL INTERSECTIONS SHALL BE CONSIDERED DIAPHRAGM BOUNDARIES, TYP

10 Unblocked Plywood Roof/Floor Sheathing Layout
Scale: 3/4" = 1'-0"

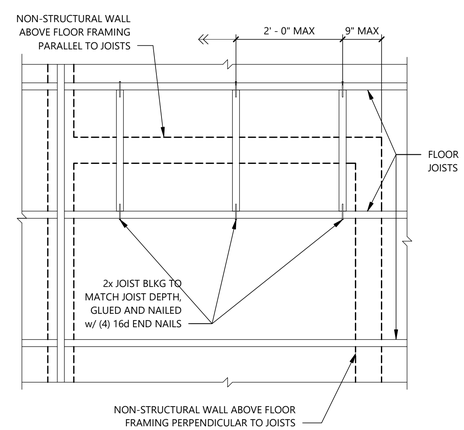

11 Floor Joist Blocking at Non-Structural Walls Above
Scale: 3/4" = 1'-0"

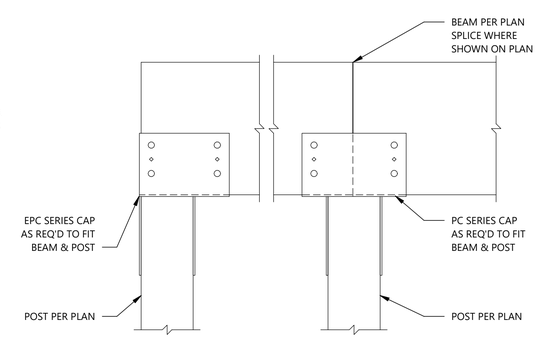

12 Typical Wood Beam over Wood Post
NTS

bcra
T 253.627.4367 F 253.627.4365 WWW.BCRADESIGN.COM
2108 PACIFIC AVENUE, SUITE 300, TACOMA, WA 98402

SEAL

FOR COORDINATION

LUND OPSAHL
1215 Fourth Avenue, Suite 1200
Seattle, Washington 98161
206-402-5156 www.lundopsahl.com

PROJECT
PORT OF EVERETT
WINE WALK BUILDING A12
XXXX SEINER DRIVE
EVERETT, WASHINGTON 98201

REVISIONS

DATE
12/13/2023
BCRA NO.
23045.00.00
DRAWN BY: JK
REVIEWED BY:
SHEET TITLE
STRUCTURAL WOOD DETAILS

bcra
© COPYRIGHT 2023 - BCRA, INC. ALL RIGHTS RESERVED
SHEET

S-602

100% DD Set

22424 12/13/2023 1:20:31 PM

IF SHEET MEASURES LESS THAN 22"X34", IT IS A REDUCED PRINT. REDUCE SCALE ACCORDINGLY

HOLDOWN SCHEDULE

Mark	Framing Attachment		Anchorage			Capacity	
	M	Fasteners (SDS 1/4 X 2 1/2)	D	Anchor Type	Embed	Seismic (Mid-Wall / Corner / End Wall)	Wind (Mid-Wall / Corner / End Wall)
HDU2-AB	3"	6	9"	5/8"Ø	7"	2,645 lb	2,645 lb
HDU4-AB	3"	10	9"	5/8"Ø	7"	3,926 lb	3,926 lb
HDU5-AB	3"	14"	9"	5/8"Ø	7"	4,855 lb	4,855 lb
HDU8-AB	4 1/2"	20	11"	7/8"Ø	8"	9,870 lb	9,870 lb
HDU11-AB	5 1/2"	30	1'-3"	1"Ø	10"	9,535 lb	9,535 lb
HDU14-AB	5 1/2"	36	1'-3"	1"Ø	10"	14,120 lb	14,120 lb

NOTES:
1. INSTALL ALL HOLDOWNS PER MANUFACTURER'S INSTRUCTIONS.
2. PLACEMENT OF ALL ANCHORS IS BASED ON CAST-IN-PLACE INSTALLATION, UNO. POST-INSTALLED ANCHORS SHALL NOT BE INSTALLED WITHOUT PRIOR APPROVAL OF ENGINEER OF RECORD.
3. "M" INDICATES MINIMUM DEPTH OF WOOD FRAMING MEMBER ATTACHED TO HOLDOWN. ALL FRAMING MEMBERS SHALL BE DOUG FIR, UNO.
4. "D" INDICATES MINIMUM DISTANCE FROM END OF CONCRETE WALL/FOOTING AT CORNER AND WALL END CONDITIONS. REFER TO ELEVATION AND SECTION FOR PLACEMENT DETAILS. UNLESS NOTED OTHERWISE: THE DISTANCE FROM ANY ANCHOR TO THE END OF CONCRETE WALL/FOOTING SHALL BE NO LESS THAN TWICE THE EMBEDMENT DEPTH NOTED IN THE SCHEDULE.

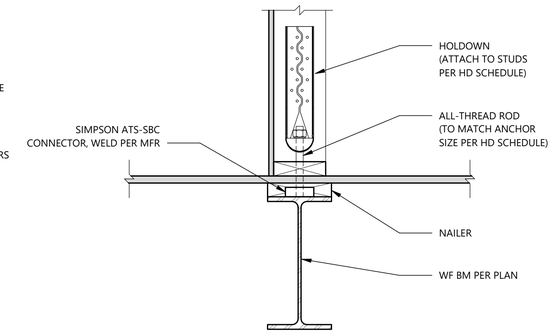

NOTES:
1. REFER TO TYPICAL HOLDOWN SCHEDULE FOR ADDITIONAL REQUIREMENTS.

2 Typical Holdown Schedule

4 Typical Holdown to Wide Flange Beam
Scale: 1 1/2" = 1'-0"

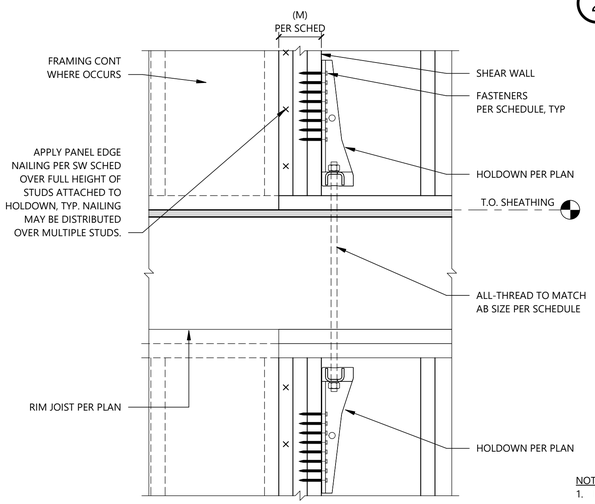

5 Typical Holdown at Wood Wall
Scale: 1 1/2" = 1'-0"

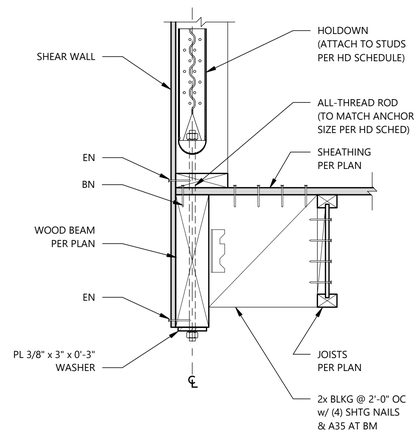

NOTES:
1. REFER TO TYPICAL HOLDOWN SCHEDULE FOR ADDITIONAL REQUIREMENTS.

6 Typical Holdown to Wood Beam
Scale: 1 1/2" = 1'-0"

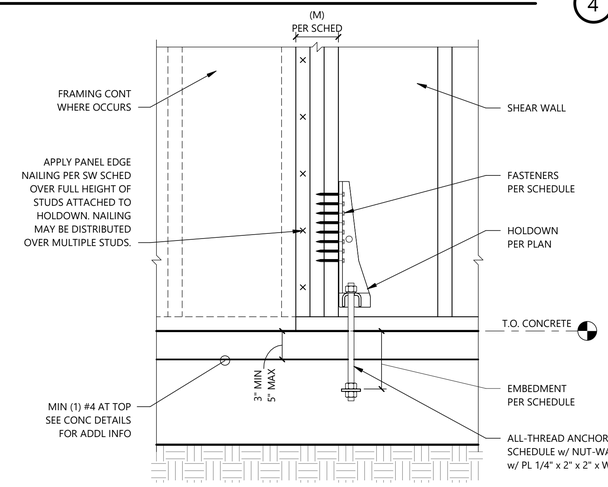

HDU-AB Elevation

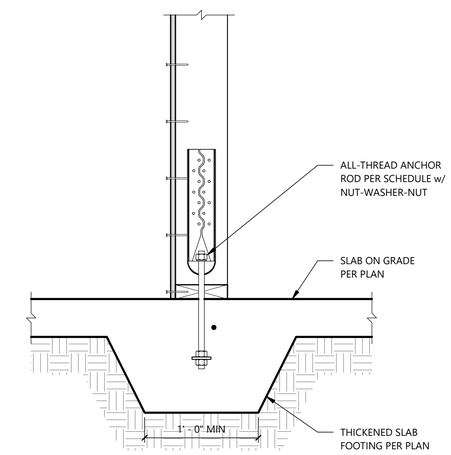

Section of HDU-AB

7 Typical Holdown - Anchor Bolt
Scale: 1 1/2" = 1'-0"

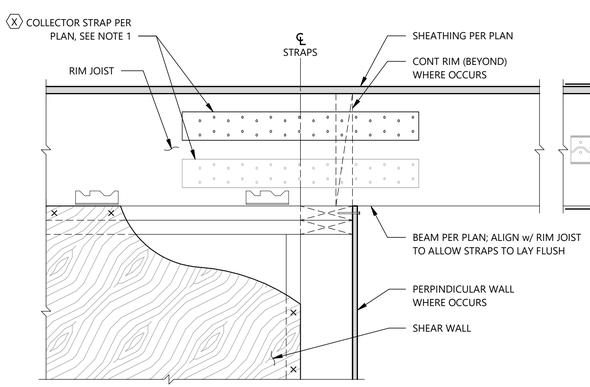

NOTES:
1. WHERE (2) STRAPS ARE REQUIRED, PROVIDE (1) STRAP AT TOP & BOTTOM OF BEAM SIDE FACE OR (1) STRAP EACH SIDE.

9 Typical Beam to Rim Joist Collector
Scale: 1 1/2" = 1'-0"

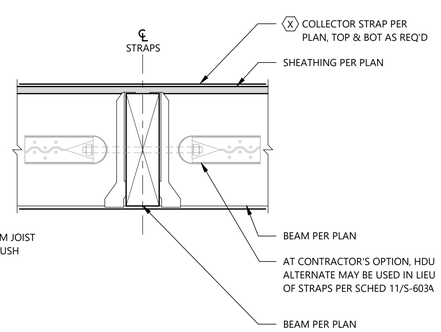

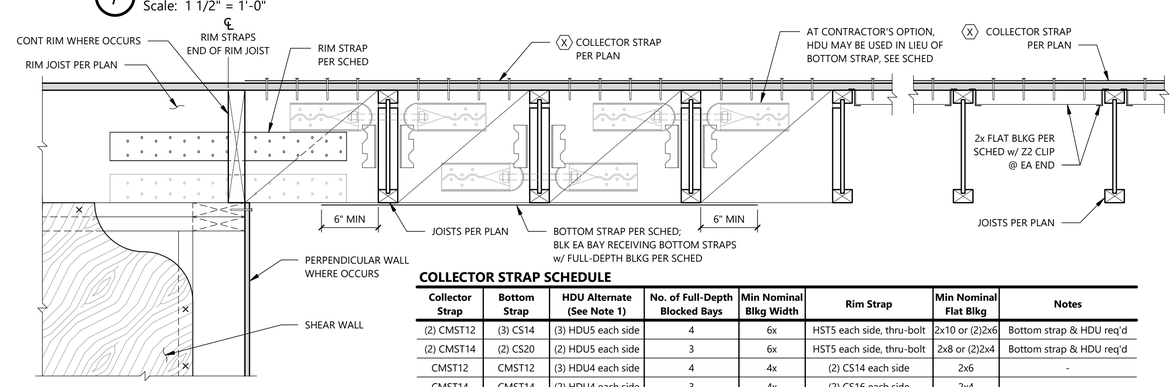

COLLECTOR STRAP SCHEDULE

Collector Strap	Bottom Strap	HDU Alternate (See Note 1)	No. of Full-Depth Blocked Bays	Min Nominal Blkg Width	Rim Strap	Min Nominal Flat Blkg	Notes
(2) CMST12	(3) CS14	(3) HDU5 each side	4	6x	HST5 each side, thru-bolt	2x10 or (2)2x6	Bottom strap & HDU req'd
(2) CMST14	(2) CS20	(2) HDU5 each side	3	6x	HST5 each side, thru-bolt	2x8 or (2)2x4	Bottom strap & HDU req'd
CMST12	CMST12	(3) HDU4 each side	4	4x	(2) CS14 each side	2x6	-
CMST14	CMST14	(2) HDU4 each side	3	4x	(2) CS16 each side	2x4	-
CMSTC16	CMSTC16	(2) HDU5	3	4x	CS14 each side	2x4	-
(2) CS16	(2) CS16	HDU4	2	4x	CS16 each side	2x4	-
CS14	CS14	HDU2	2	4x	CS14	2x4	-
CS16	CS16	HDU2	2	4x	CS16	2x4	-
CS20	CS20	HDU2	2	4x	CS20	2x4	-

NOTES:
1. REFERENCE TYPICAL HOLDOWN SCHEDULE FOR THREADED ROD DIAMETER.

11 Typical Blocking to Rim Joist Collector
Scale: 1 1/2" = 1'-0"

bcra
T 253.627.4367 F 253.627.4365 WWW.BCRADESIGN.COM
2108 PACIFIC AVENUE, SUITE 300, TACOMA, WA 98402

SEAL

FOR COORDINATION

LUND OPSAHL
1215 Fourth Avenue, Suite 1200
Seattle, Washington 98161
206-402-5156 www.lundopsahl.com

PROJECT
PORT OF EVERETT
WINE WALK BUILDING A12
XXXX SEINER DRIVE
EVERETT, WASHINGTON 98201

REVISIONS

DATE
12/13/2023

BCRA NO.
23045.00.00

DRAWN BY: JK

REVIEWED BY:

SHEET TITLE
STRUCTURAL WOOD DETAILS

bcra

© COPYRIGHT 2023 - BCRA, INC. ALL RIGHTS RESERVED

SHEET

S-603

100% DD Set

IF SHEET MEASURES LESS THAN 22"X34", IT IS A REDUCED PRINT. REDUCE SCALE ACCORDINGLY

22x34 12/13/2023 1:20:31 PM

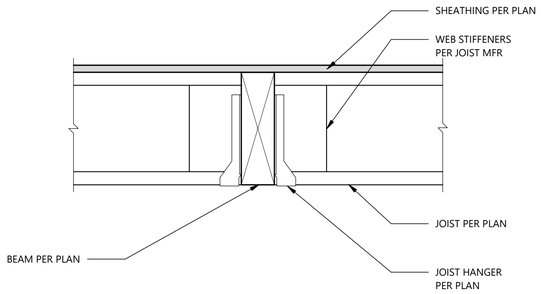

1 Typical Flush Beam Connection
Scale: 1 1/2" = 1'-0"

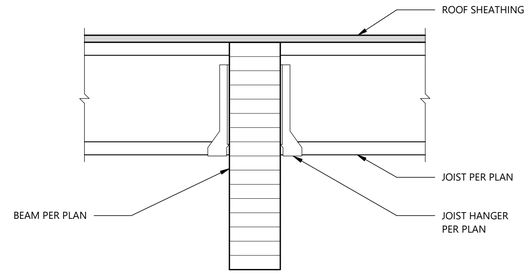

2 Roof Framing at Drop Beam
Scale: 1 1/2" = 1'-0"

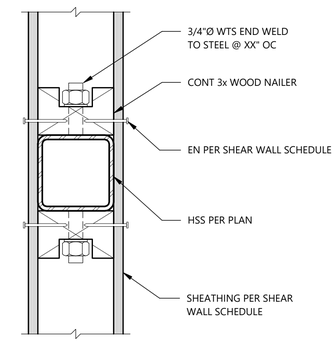

Plan

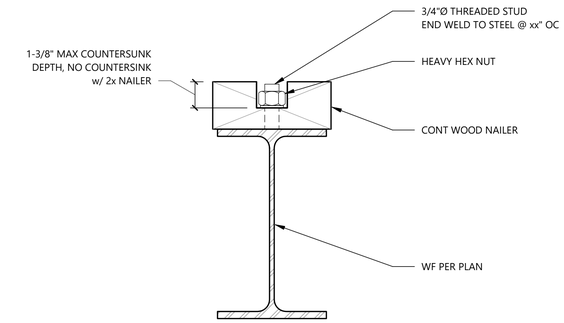

Section

3 Typical Beam/Column Nailer
Scale: 3" = 1'-0"

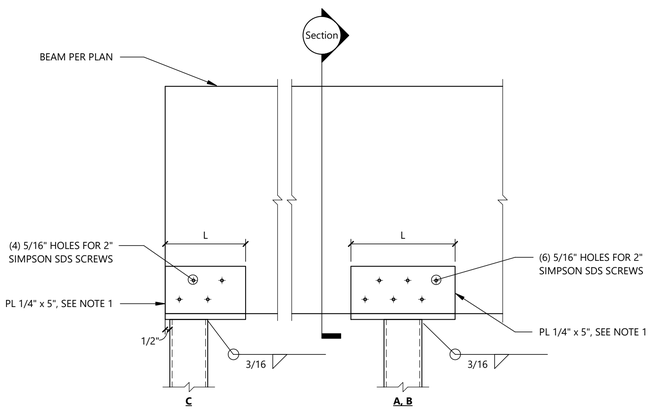

At End of Beam **At Continuous Beam**

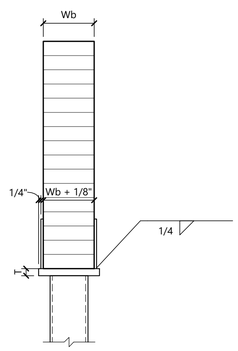

Section

NOTE:
1. IN LIEU OF FABRICATED POST CAP, BUILDER MAY SUBSTITUTE SIMPSON CCOQ POST CAP WITH ARCHITECT AND ENGINEER APPROVAL.

5 Typical Wood Beam over HSS Column
Scale: 1 1/2" = 1'-0"

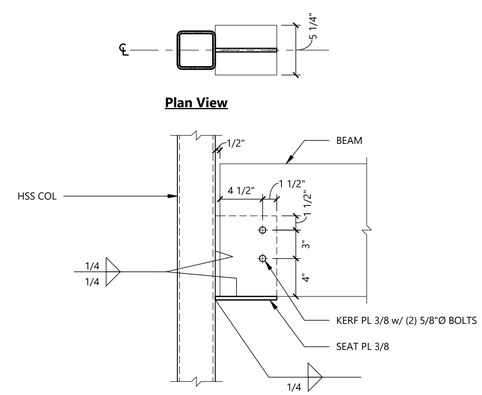

Plan View

7 Typical Wood Beam to HSS Column
Scale: 1 1/2" = 1'-0"

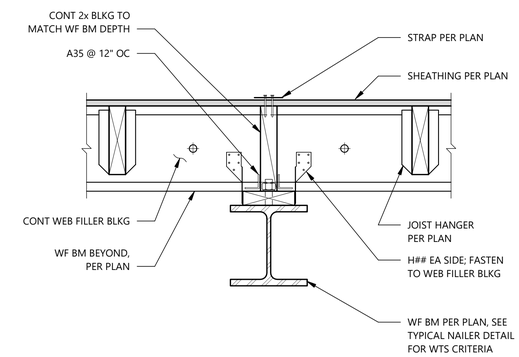

8 Wide Flange Roof Framing at Wood Joists
Scale: 1 1/2" = 1'-0"

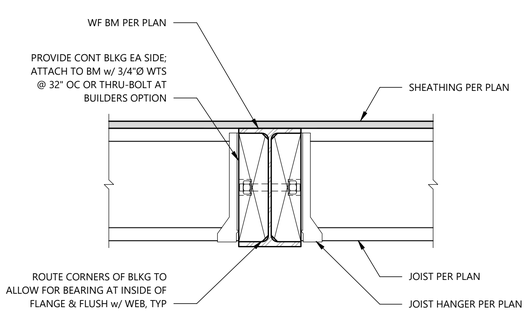

Perpendicular Connection

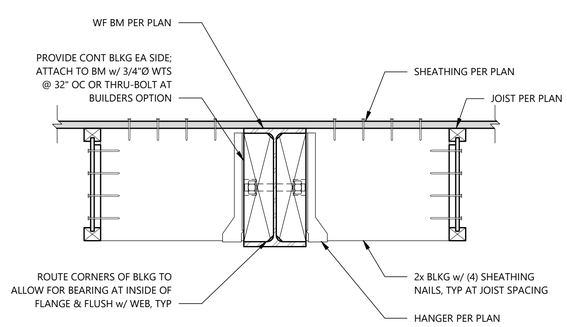

Parallel Connection

9 Flush Beam Connection at Wide Flange Beam
Scale: 1 1/2" = 1'-0"

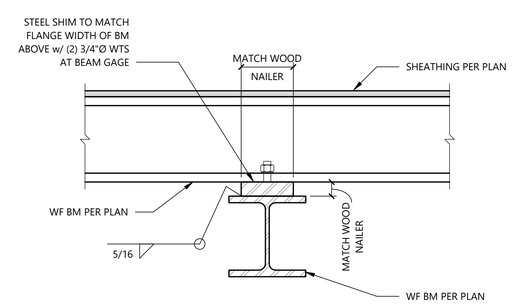

NOTES:
1. WOOD JOISTS NOT SHOWN FOR CLARITY.

11 Wide Flange Roof Framing at Wide Flange
Scale: 1 1/2" = 1'-0"

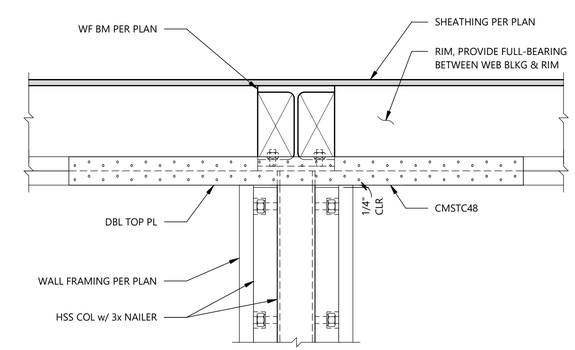

12 Wide Flange Roof Framing to HSS Post
Scale: 1 1/2" = 1'-0"

bcra
T 253.627.4367 F 253.627.4395 WWW.BCRADESIGN.COM
2106 PACIFIC AVENUE, SUITE 300, TACOMA, WA 98402

SEAL

FOR COORDINATION

LUND OPSAHL
1215 Fourth Avenue, Suite 1200
Seattle, Washington 98161
206-402-5156 www.lundopsahl.com

PROJECT
PORT OF EVERETT
WINE WALK BUILDING A12
XXXX SEINER DRIVE
EVERETT, WASHINGTON 98201

REVISIONS

DATE
12/13/2023
BCRA NO.
23045.00.00
DRAWN BY: JK
REVIEWED BY:
SHEET TITLE
STRUCTURAL WOOD DETAILS

bcra
© COPYRIGHT 2023 - BCRA, INC. ALL RIGHTS RESERVED
SHEET
S-604
100% DD Set

22x24 12/13/2023 1:20:31 PM

IF SHEET MEASURES LESS THAN 22"X34", IT IS A REDUCED PRINT. REDUCE SCALE ACCORDINGLY

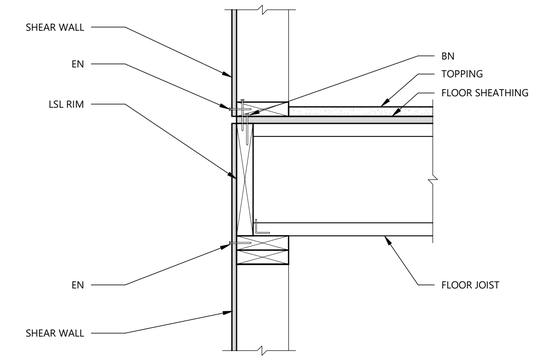

4 Typical I-Joist Perp
Scale: 1 1/2" = 1'-0"

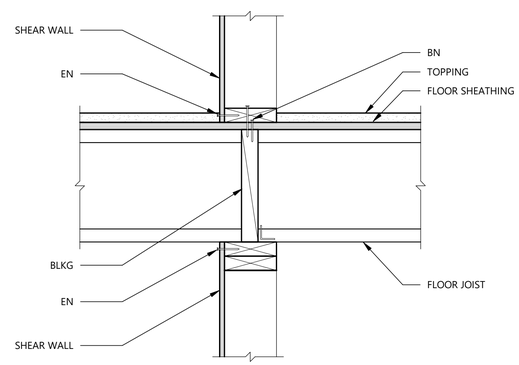

6 Typical I-Joist Perp at Interior Wall
Scale: 1 1/2" = 1'-0"

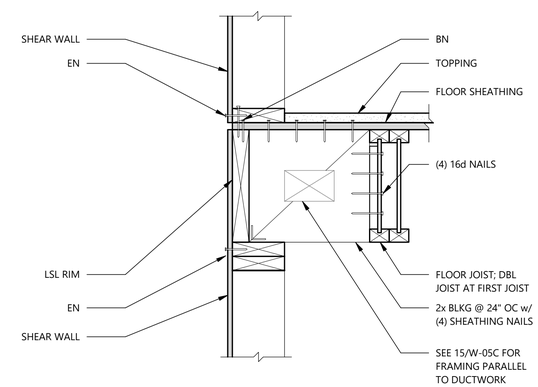

7 Typical I-Joist Parallel
Scale: 1 1/2" = 1'-0"

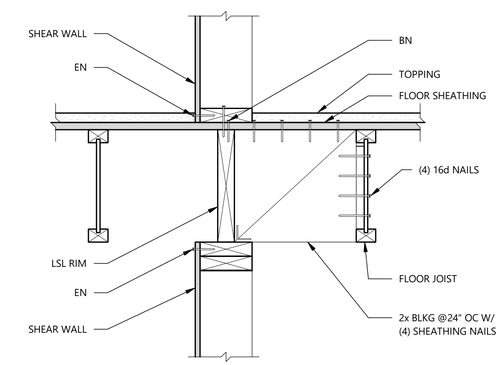

8 Typical I-Joist Parallel at Interior Wall
Scale: 1 1/2" = 1'-0"

DECKING FASTENING SCHEDULE

Nominal Decking Thickness	Sheathing Thickness	Maximum Nail Size	BN (Spacing Per Plan)	Decking Fastening at Supports (Field Screws)	Decking Fastening at Collectors/Shear Wall (Boundary Screws)
2x	15/32"	8d x 1 1/2"	6"	0.22x4" SDWS @ 24"OC	0.22x4" SDWS @ 20"OC
2x	15/32"	8d x 1 1/2"	4"	0.22x4" SDWS @ 24"OC	0.22x4" SDWS @ 15"OC
2x	15/32"	8d x 1 1/2"	2 1/2"	0.22x4" SDWS @ 24"OC	0.22x4" SDWS @ 10"OC
2x	15/32"	8d x 1 1/2"	2"	0.22x4" SDWS @ 24"OC	0.22x4" SDWS @ 9"OC
3x	15/32"	8d x 2 1/2"	6"	0.22x6" SDWS @ 24"OC	0.22x6" SDWS @ 16"OC
3x	15/32"	8d x 2 1/2"	4"	0.22x6" SDWS @ 24"OC	0.22x6" SDWS @ 12"OC
3x	15/32"	8d x 2 1/2"	2 1/2"	0.22x6" SDWS @ 24"OC	0.22x6" SDWS @ 8"OC
3x	15/32"	8d x 2 1/2"	2"	0.22x6" SDWS @ 24"OC	0.22x6" SDWS @ 7"OC
4x	15/32"	10d x 3"	6"	0.22x8" SDWS @ 24"OC	0.22x8" SDWS @ 14"OC
4x	15/32"	10d x 3"	4"	0.22x8" SDWS @ 24"OC	0.22x8" SDWS @ 11"OC
4x	15/32"	10d x 3"	2 1/2"	0.22x8" SDWS @ 24"OC	0.22x8" SDWS @ 7"OC
4x	15/32"	10d x 3"	2"	0.22x8" SDWS @ 24"OC	0.22x8" SDWS @ 6"OC

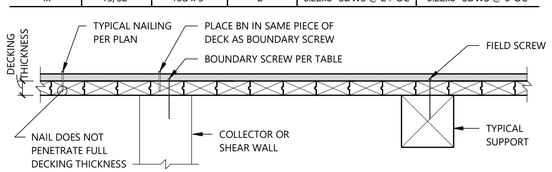

9 Typical Decking Attachment to Supports
NTS

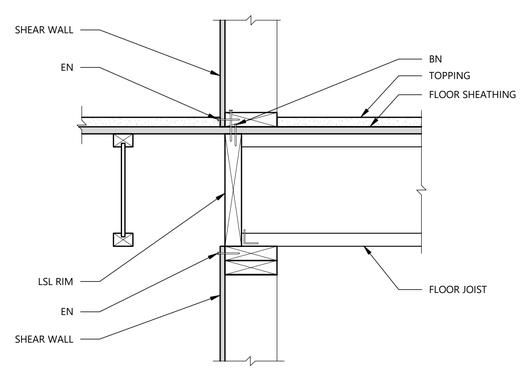

10 Typical I-Joist Perp to Parallel at Interior Wall
Scale: 1 1/2" = 1'-0"

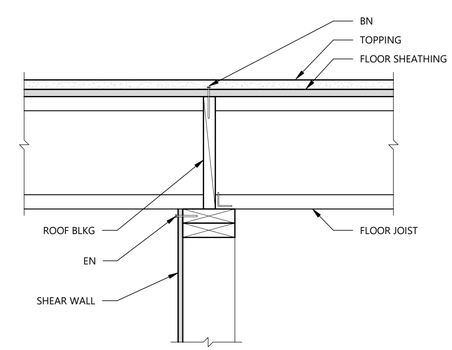

11 I-Joist Floor Framing at Shear Wall
Scale: 1 1/2" = 1'-0"

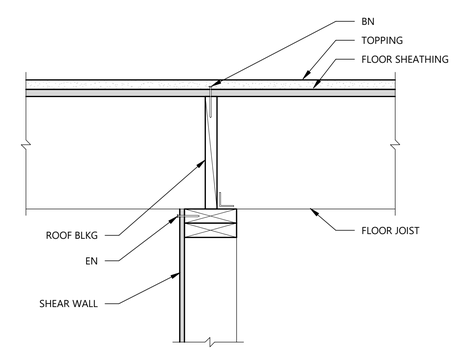

12 Floor Framing at Shear Wall
Scale: 1 1/2" = 1'-0"

bcra
T 253.627.4367 F 253.627.4395 WWW.BCRADESIGN.COM
2108 PACIFIC AVENUE, SUITE 300, TACOMA, WA 98402

SEAL

FOR COORDINATION

LUND OPSAHL
1215 Fourth Avenue, Suite 1200
Seattle, Washington 98161
206-402-5156 www.lundopsahl.com

PROJECT
PORT OF EVERETT
WINE WALK BUILDING A12
XXXX SEINER DRIVE
EVERETT, WASHINGTON 98201

REVISIONS

DATE
12/13/2023
BCRA NO.
23045.00.00
DRAWN BY: JK
REVIEWED BY:
SHEET TITLE
STRUCTURAL WOOD DETAILS

bcra
© COPYRIGHT 2023 - BCRA, INC. ALL RIGHTS RESERVED
SHEET

S-605

100% DD Set

IF SHEET MEASURES LESS THAN 22"X34", IT IS A REDUCED PRINT. REDUCE SCALE ACCORDINGLY

22x34 12/13/2023 1:20:32 PM

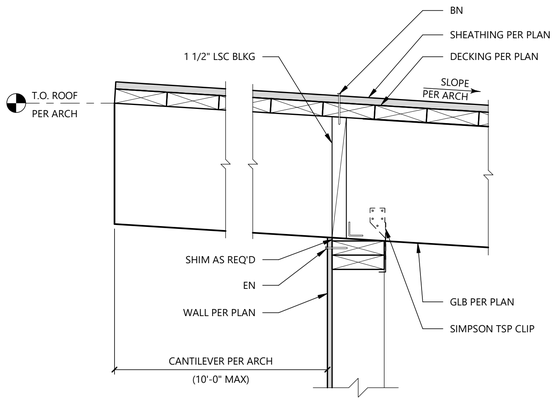

1 Detail
Scale: 1 1/2" = 1'-0"

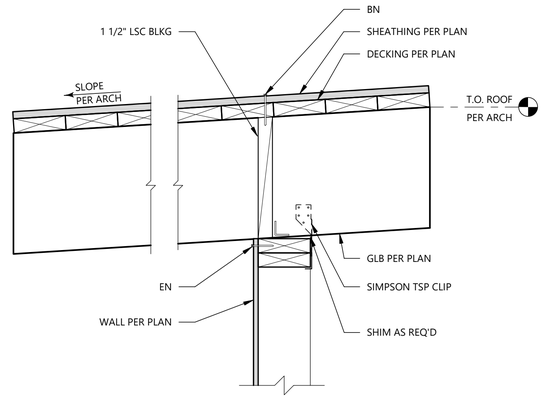

2 Detail
Scale: 1 1/2" = 1'-0"

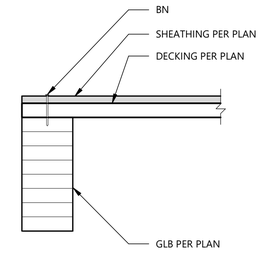

3 Detail
Scale: 1 1/2" = 1'-0"

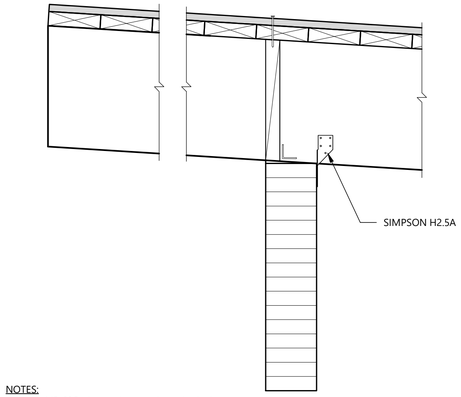

NOTES:
1. SEE 1/S-606 FOR INFORMATION NOT SHOWN

4 Detail
Scale: 1 1/2" = 1'-0"

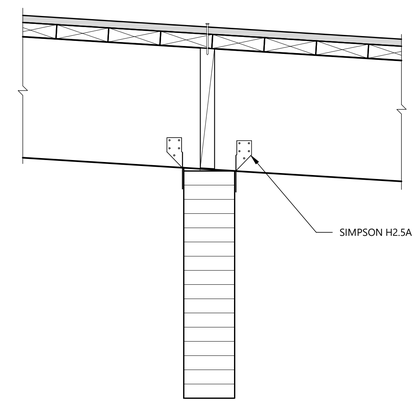

NOTES:
1. SEE 1/S-606 FOR INFORMATION NOT SHOWN

7 Detail
Scale: 1 1/2" = 1'-0"

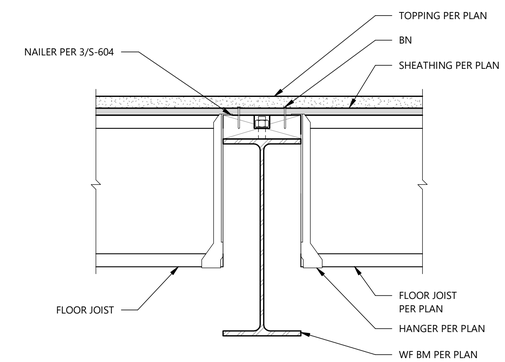

8 Detail
NTS

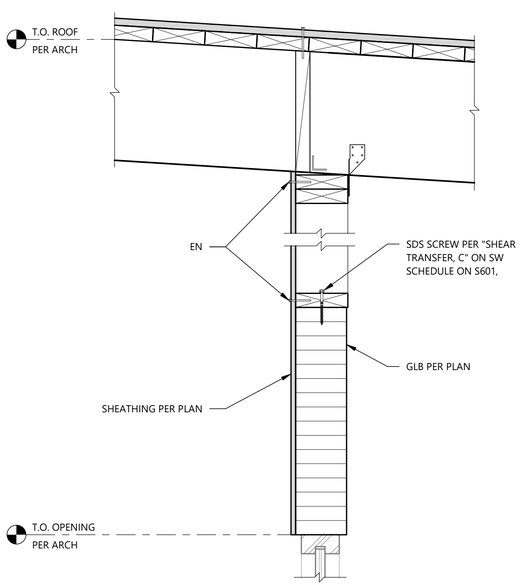

NOTES:
1. SEE 1/S-606 FOR INFORMATION NOT SHOWN

9 Detail
Scale: 1 1/2" = 1'-0"

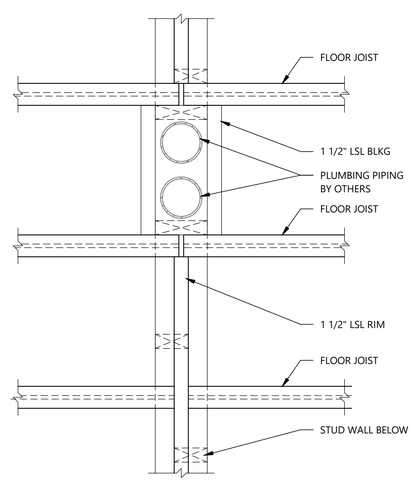

10 I-Joist Floor Framing Plan at Plumbing Wall
Scale: 1 1/2" = 1'-0"

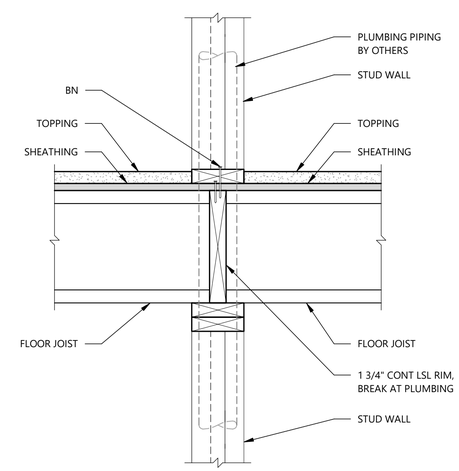

11 I-Joist Floor Framing at Plumbing Wall
Scale: 1 1/2" = 1'-0"

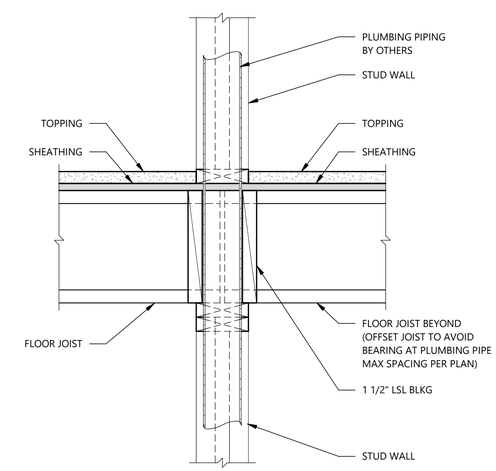

12 I-Joist Floor Framing thru Plumbing Wall
Scale: 1 1/2" = 1'-0"

22x34 12/13/2023 1:20:32 PM

IF SHEET MEASURES LESS THAN 22"X34", IT IS A REDUCED PRINT. REDUCE SCALE ACCORDINGLY

bcra
T 253.627.4367 F 253.627.4395 WWW.BCRADESIGN.COM
2106 PACIFIC AVENUE, SUITE 300, TACOMA, WA 98402

SEAL

FOR COORDINATION

LUND OPSAHL
1215 Fourth Avenue, Suite 1200
Seattle, Washington 98161
206-402-5156 www.lundopsahl.com

PROJECT
PORT OF EVERETT
WINE WALK BUILDING A12
XXXX SEINER DRIVE
EVERETT, WASHINGTON 98201

REVISIONS

DATE 12/13/2023
BCRA NO. 23045.00.00
DRAWN BY: JK
REVIEWED BY:
SHEET TITLE
STRUCTURAL WOOD DETIALS

bcra
© COPYRIGHT 2023 - BCRA, INC. ALL RIGHTS RESERVED

SHEET
S-606

100% DD Set

MECHANICAL LEGEND

HVAC

SYMBOL	DESCRIPTION	SYMBOL	DESCRIPTION
	SUPPLY DUCT UP		FLEXIBLE DUCT
	SUPPLY DUCT DOWN		VOLUME DAMPER (VD)
	RETURN, RELIEF, TRANSFER, OSA DUCT UP	M	MOTORIZED DAMPER
	RETURN, RELIEF, TRANSFER, OSA DUCT DOWN		CEILING RADIANT FIRE DAMPER
	EXHAUST DUCT UP		FIRE DAMPER
	EXHAUST DUCT DOWN		COMBINATION FIRE/SMOKE DAMPER
	RECTANGULAR DUCT SQUARE ELBOW UP		FLEXIBLE CONNECTION (DUCT)
	RECTANGULAR DUCT, RADIUS ELBOW UP		TURNING VANES (TV)
	RECTANGULAR DUCT, SQUARE ELBOW DOWN		BACKDRAFT DAMPER (BD)
	RECTANGULAR DUCT, RADIUS ELBOW DOWN	T	THERMOSTAT (T'STAT)
	ROUND DUCT ELBOW UP	T G	THERMOSTAT WITH GUARD OR FLAT PLATE SEE SPECIFICATIONS
	ROUND DUCT ELBOW DOWN	H	HUMIDISTAT (H'STAT)
	CEILING AIR TERMINAL - SQUARE	PS	SPACE PRESSURE SENSOR
	CEILING AIR TERMINAL - ROUND	CO2	CARBON DIOXIDE SENSOR
12 X 12 CD 300 CFM	AIR TERMINAL SIZE, TYPE & CFM	XØ	ROUND DUCT
X/X	SQUARE DUCT	X/XØ	OVAL DUCT
	GATE VALVE (GV)	COND	CONDENSATE PIPING
	GLOBE VALVE	R	REFRIGERANT PIPING (1)
	BUTTERFLY VALVE		WASTE OR VENT UP
	PRESSURE REDUCING VALVE (PRV)		WALL CLEANOUT
	CHECK VALVE (CV)		FLUSH CLEANOUT (FCO/SCO)
	FLOW CONTROL VALVE		CLEAN OUT (CO)
	TEMP./PRESS. RELIEF VALVE (T&PRV)		IN LINE WASTE CONNECTION
	BALL VALVE		P-TRAP
	BALANCING COCK (BC)		BRANCH PIPE DOWN
	PIPE DOWN		BRANCH PIPE UP
	PIPE UP		TEE & UP
	BRANCH-TOP CONNECTION		TEE
	BRANCH-BOTTOM CONNECTION		ELBOWS, 90° & 45°
	BRANCH-SIDE CONNECTION		CAP
	FLOW DIRECTION		PUMP
OR	VALVE IN RISER / DROP		WALL HYDRANT
	PIPE ANCHOR	T	THERMOMETER
	PIPE GUIDE	P	PRESSURE GAGE
	FLEXIBLE CONNECTION (PIPE)		CROSSING LINES, NON CONNECTING
	REDUCER		PIPE CONTINUATION
	STRAINER	MC	MECHANICAL CONTRACTOR
	UNION	EC	ELECTRICAL CONTRACTOR
F –	VACUUM BREAKER	GC	GENERAL CONTRACTOR
	DRAIN VALVE	BFF	BELOW FINISHED FLOOR
		AFF	ABOVE FINISHED FLOOR

NOTES FOR MECHANICAL LEGEND SCHEDULE.

(1) SINGLE LINE INDICATED ON PLANS DESIGNATES THE PROPOSED ROUTING FOR THE REFRIGERATION PIPING BETWEEN THE INDOOR AND OUTDOOR UNITS. THAT SINGLE LINE REPRESENTS ALL THE REQUIRED PIPING RUNS REQUIRED FOR THE SYSTEM DESIGNED.

bcra
T 253.627.4367 F 253.627.4395 WWW.BCRADESIGN.COM
2106 PACIFIC AVENUE, SUITE 300, TACOMA, WA 98402

SEAL

PROJECT
PORT OF EVERETT
WINE WALK BUILDING A12
XXXX SEINER DRIVE
EVERETT, WASHINGTON 98201

REVISIONS

DATE
12.13.2023

BCRA NO.
23045.00.00

DRAWN BY: --

REVIEWED BY: --

SHEET TITLE
MECHANICAL LEGEND & GENERAL NOTES

bcra

© COPYRIGHT 2023 - BCRA, INC. ALL RIGHTS RESERVED

SHEET

M-101

100% DESIGN DEVELOPMENT

IF SHEET MEASURES LESS THAN 22"X34", IT IS A REDUCED PRINT. REDUCE SCALE ACCORDINGLY

22x34 6/9/2023 1:12:43 PM

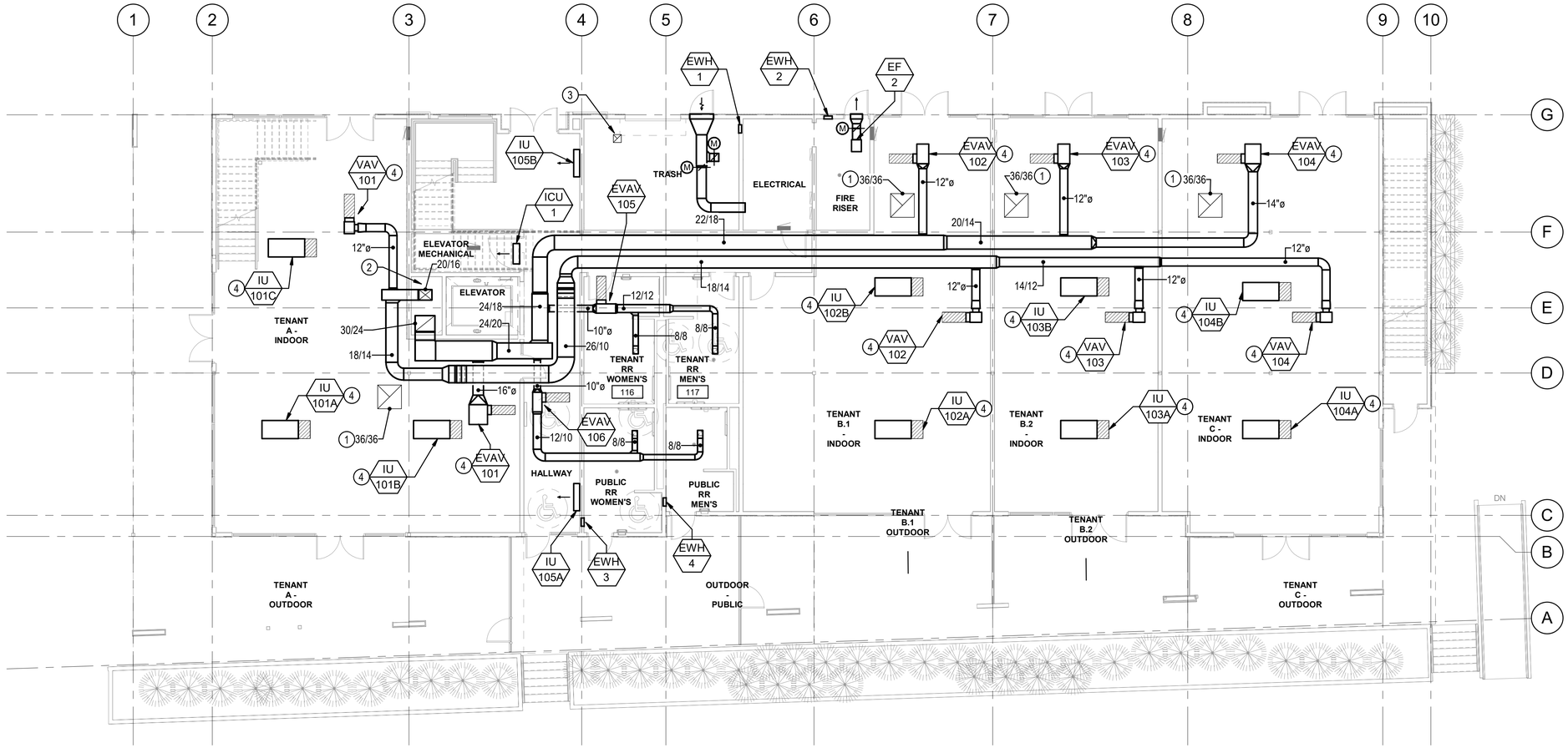

1 FIRST FLOOR MECHANICAL PLAN

1/8" = 1'-0"

0 4 8 16

SCALE: 1/8" = 1'-0"

TRUE NORTH

CONSTRUCTION NOTES

1. GREASE EXHAUST DUCT TO BE CAPPED AND SEALED ABOVE CEILING FOR FUTURE TI. EA DUCT UP TO ROOF.
2. REFRIGERANT PIPING ROUTED FROM ROOFTOP CONDENSERS TO INDOOR UNITS IN THIS AREA.
3. 12/12 EA DUCT UP TO EF-1 ON ROOF.
4. EQUIPMENT PROVIDED BY SHELL/CORE PROJECT AND SHOWN FOR FUTURE TI SPACE. DUCTWORK AND GRDS DOWNSTREAM OF THIS EQUIPMENT (WHERE APPLICABLE) TO BE PROVIDED BY FUTURE TI.

GENERAL NOTES

1. ALL DUCTWORK OFFSET/ELBOWS MAY NOT BE SHOWN ON PLANS. CONTRACTOR SHALL PROVIDE OFFSETS AS REQUIRED TO ALLOW DUCT ROUTING AROUND STRUCTURE OR OTHER INTERFERNECES.
2. DUCTWORK TO BE COORDINATED WITH ALL TRADES PRIOR TO INSTALLATION.
3. ALL EQUIPMENT AND DUCTWORK TO BE PROVIDED BY SHELL/CORE PROJECT UNLESS NOTED OTHERWISE TO BE PROVIDED BY FUTURE TI.

bcra
T 253.627.4367 F 253.627.4395 WWW.BCRADESIGN.COM
2106 PACIFIC AVENUE, SUITE 300, TACOMA, WA 98402

SEAL

BCE engineers, inc.
6021 12th Street East, Suite 200
Fife, Washington 98424
T: 253.922.0446
F: 253.922.0896

PROJECT
PORT OF EVERETT
WINE WALK BUILDING A12
XXXX SEINER DRIVE
EVERETT, WASHINGTON 98201

REVISIONS

DATE
12.13.2023

BCRA NO.
23045.00.00

DRAWN BY: Author

REVIEWED BY:

SHEET TITLE
FIRST FLOOR MECHANICAL PLAN

bcra

© COPYRIGHT 2023 - BCRA, INC. ALL RIGHTS RESERVED

SHEET

M-121

100% DESIGN DEVELOPMENT

IF SHEET MEASURES LESS THAN 22"X34", IT IS A REDUCED PRINT. REDUCE SCALE ACCORDINGLY

22x34 12/13/2023 4:58:01 PM

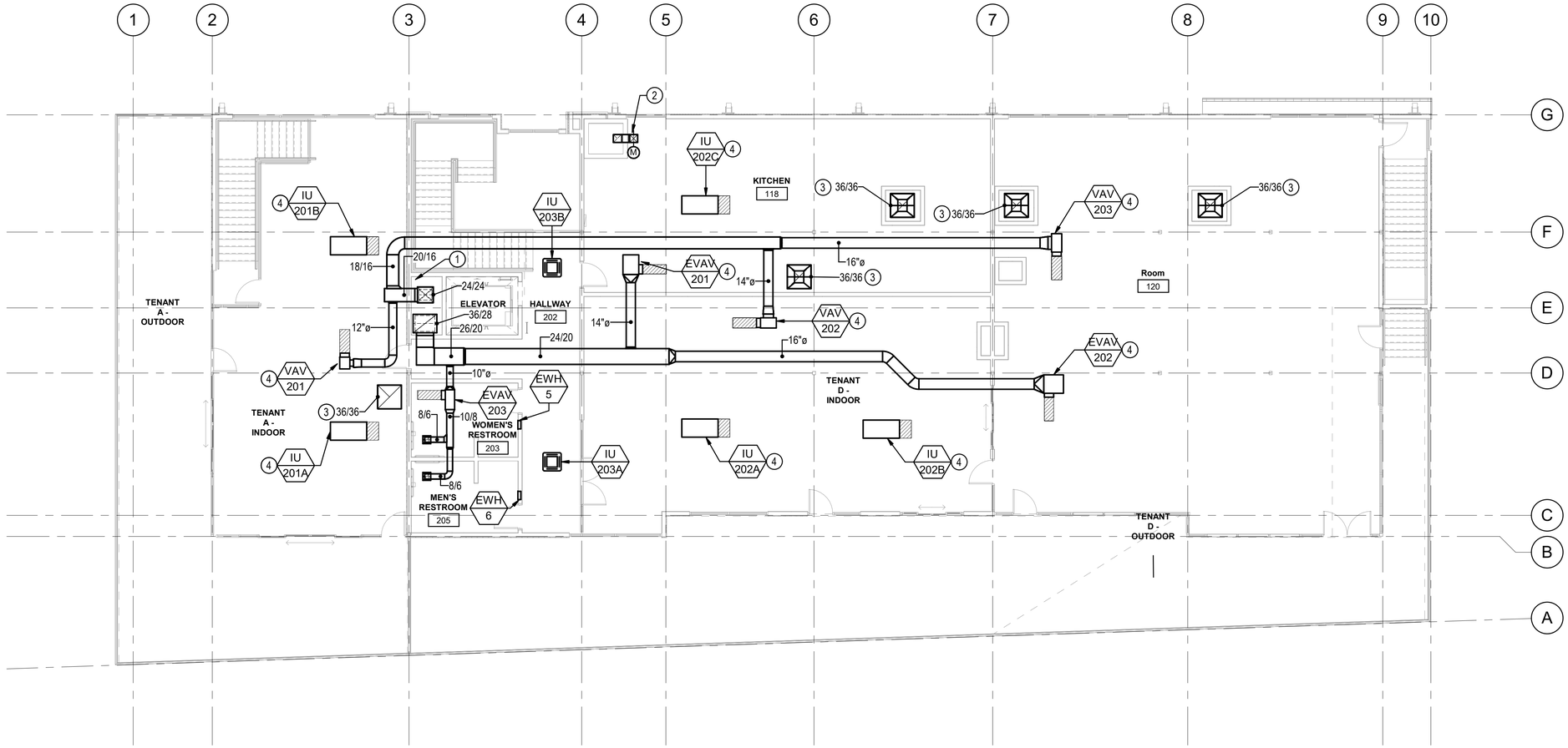

1 SECOND FLOOR MECHANICAL PLAN

1/8" = 1'-0"

TRUE NORTH

0 4 8 16

SCALE: 1/8" = 1'-0"

CONSTRUCTION NOTES

1. REFRIGERANT PIPING ROUTED FROM ROOFTOP CONDENSERS TO INDOOR UNITS IN THIS AREA.
2. 12/12 EA UP TO ROOF.
3. EA DUCT UP TO ROOF.
4. EQUIPMENT PROVIDED BY SHELL/CORE PROJECT AND SHOWN FOR FUTURE TI SPACE. DUCTWORK AND GRDS DOWNSTREAM OF THIS EQUIPMENT (WHERE APPLICABLE) TO BE PROVIDED BY FUTURE TI.

GENERAL NOTES

1. ALL DUCTWORK OFFSET/ELBOWS MAY NOT BE SHOWN ON PLANS. CONTRACTOR SHALL PROVIDE OFFSETS AS REQUIRED TO ALLOW DUCT ROUTING AROUND STRUCTURE OR OTHER INTERFERENCES.
2. DUCTWORK TO BE COORDINATED WITH ALL TRADES PRIOR TO INSTALLATION.
3. ALL EQUIPMENT AND DUCTWORK TO BE PROVIDED BY SHELL/CORE PROJECT UNLESS NOTED OTHERWISE TO BE PROVIDED BY FUTURE TI.

bcra
T 253.627.4367 F 253.627.4395 WWW.BCRADESIGN.COM
2106 PACIFIC AVENUE, SUITE 300, TACOMA, WA 98402

BCE engineers, inc.
6021 12th Street East, Suite 200
Fife, Washington 98424
T: 253.922.0446
F: 253.922.0896

SEAL

PROJECT
PORT OF EVERETT
WINE WALK BUILDING A12
XXXX SEINER DRIVE
EVERETT, WASHINGTON 98201

REVISIONS

DATE
12.13.2023

BCRA NO.
23045.00.00

DRAWN BY: Author

REVIEWED BY:

SHEET TITLE
SECOND FLOOR MECHANICAL PLAN

bcra

© COPYRIGHT 2023 - BCRA, INC. ALL RIGHTS RESERVED

SHEET

M-122

100% DESIGN DEVELOPMENT

22x34 12/13/2023 4:08:03 PM

IF SHEET MEASURES LESS THAN 22"X34", IT IS A REDUCED PRINT. REDUCE SCALE ACCORDINGLY

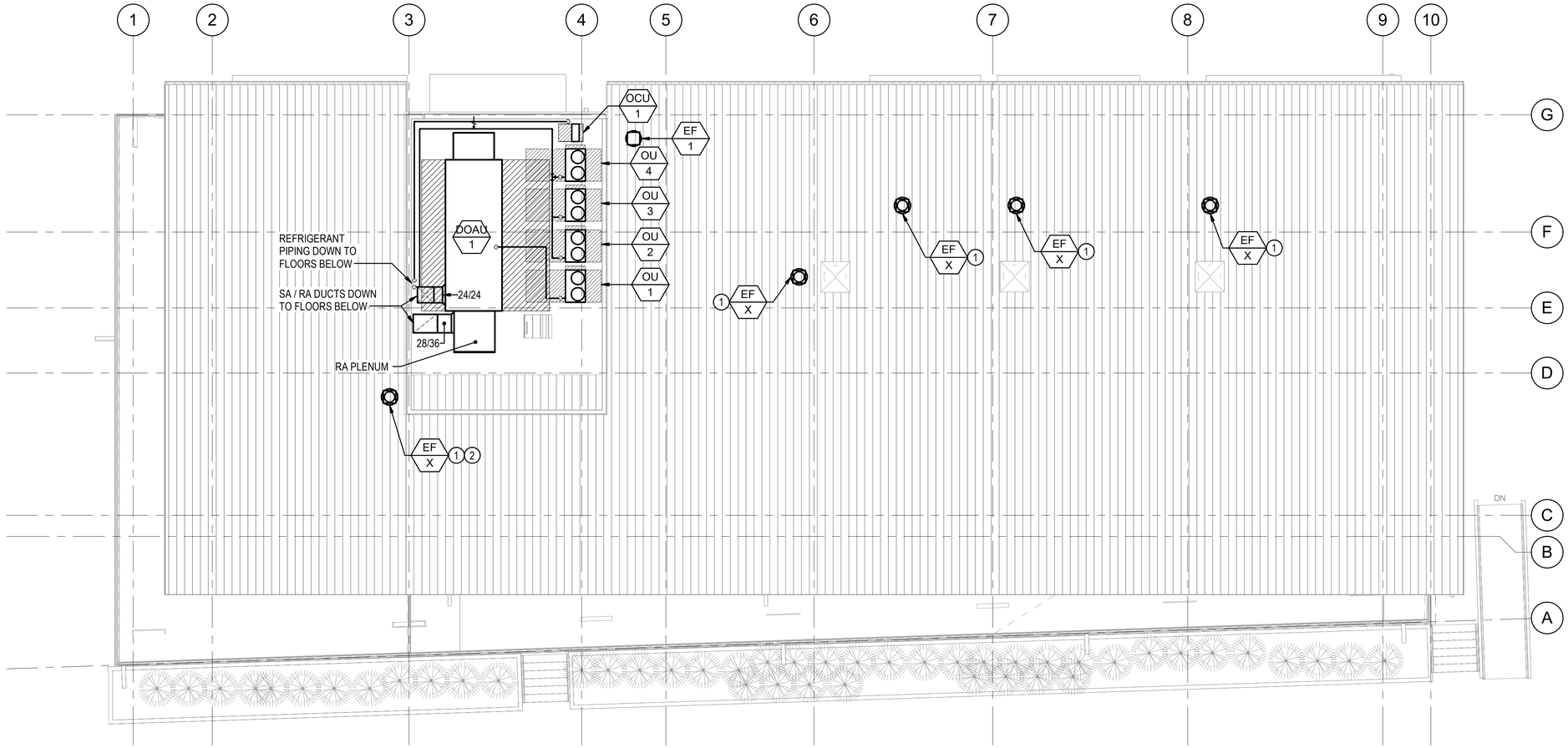

1 ROOF MECHANICAL PLAN

1/8" = 1'-0"

TRUE NORTH

0 4 8 16

SCALE: 1/8" = 1'-0"

CONSTRUCTION NOTES

1. GREASE EXHAUST FAN LOCATIONS SHOWN FOR FUTURE TI OF TENANT SPACES.
2. TOP OF FUTURE EXHAUST FAN OUTLET TO BE MOUNTED LEVEL WITH TOP OF MECHANICAL SCREEN. GREASE CUP TO BE LOCATED AT ROOF LEVEL FOR EASE OF MAINTENANCE.

GENERAL NOTES

1. EQUIPMENT TO BE COORDINATED WITH ALL TRADES PRIOR TO INSTALLATION.
2. PIPING IS SCHEMATIC IN NATURE, CONTRACTOR TO PROVIDE ADDITIONAL FITTINGS AND OFFSETS, AS REQUIRED, TO INSTALL A COMPLETE AND FUNCTIONING SYSTEM.
3. SINGLE LINE SHOWN ON PLANS DESIGNATES THE PROPOSED ROUTING AND REPRESENTS ALL THE REQUIRED PIPING RUNS FOR THE SYSTEM.
4. ALL EQUIPMENT, DUCTWORK, AND PIPING TO BE PROVIDED BY SHELL/CORE PROJECT UNLESS NOTED OTHERWISE TO BE PROVIDED BY FUTURE TI.

bcra
T 253.627.4367 F 253.627.4395 WWW.BCRADESIGN.COM
2106 PACIFIC AVENUE, SUITE 300, TACOMA, WA 98402

SEAL

BCE engineers, inc.
6021 12th Street East, Suite 200
Fife, Washington 98424
T: 253.922.0446
F: 253.922.0896

PROJECT
PORT OF EVERETT
WINE WALK BUILDING A12
XXXX SEINER DRIVE
EVERETT, WASHINGTON 98201

REVISIONS

DATE
12.13.2023

BCRA NO.
23045.00.00

DRAWN BY: Author

REVIEWED BY:

SHEET TITLE
ROOF MECHANICAL PLAN

bcra

© COPYRIGHT 2023 - BCRA, INC. ALL RIGHTS RESERVED

SHEET

M-131

100% DESIGN DEVELOPMENT

IF SHEET MEASURES LESS THAN 22"X34", IT IS A REDUCED PRINT. REDUCE SCALE ACCORDINGLY

22x34 12/13/2023 4:58:04 PM

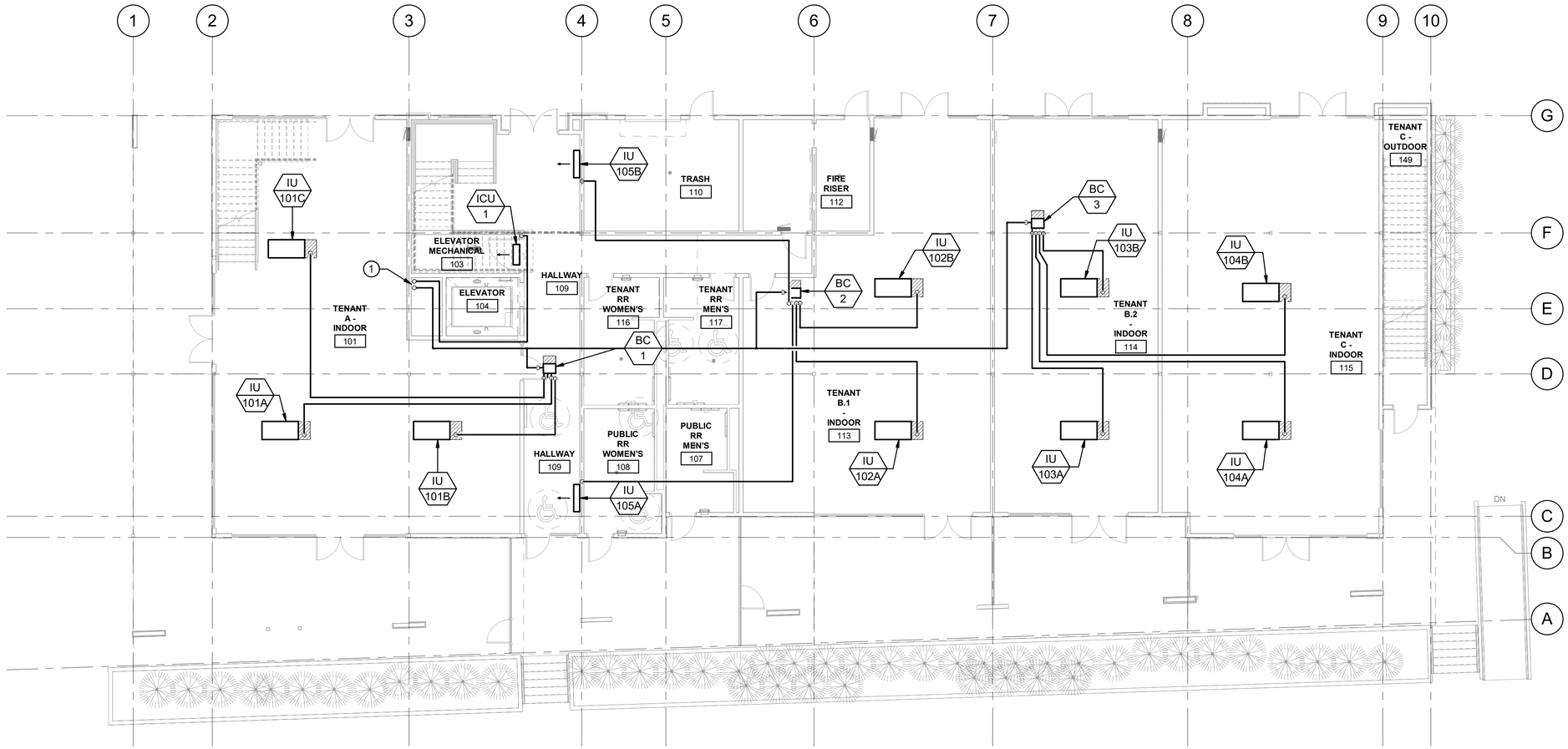

1 FIRST FLOOR MECHANICAL PIPING PLAN

1/8" = 1'-0"

TRUE NORTH

0 4 8 16

SCALE: 1/8" = 1'-0"

CONSTRUCTION NOTES

1. REFRIGERANT PIPING UP TO ROOF

GENERAL NOTES

1. PIPING IS SCHEMATIC IN NATURE, CONTRACTOR TO PROVIDE ADDITIONAL FITTINGS AND OFFSETS, AS REQUIRED, TO INSTALL A COMPLETE AND FUNCTIONING SYSTEM.
2. SINGLE LINE SHOWN ON PLANS DESIGNATES THE PROPOSED ROUTING AND REPRESENTS ALL THE REQUIRED PIPING RUNS FOR THE SYSTEM.
3. ALL EQUIPMENT AND PIPING TO BE PROVIDED BY SHELL/CORE PROJECT UNLESS NOTED OTHERWISE TO BE PROVIDED BY FUTURE TI.

bcra
T 253.627.4367 F 253.627.4395 WWW.BCRADESIGN.COM
2106 PACIFIC AVENUE, SUITE 300, TACOMA, WA 98402

SEAL

BCE engineers, inc.
6021 12th Street East, Suite 200
Fife, Washington 98424
T: 253.922.0446
F: 253.922.0896

PROJECT
PORT OF EVERETT
WINE WALK BUILDING A12
XXXX SEINER DRIVE
EVERETT, WASHINGTON 98201

REVISIONS

DATE
12.13.2023

BCRA NO.
23045.00.00

DRAWN BY: Author

REVIEWED BY:

SHEET TITLE
FIRST FLOOR MECHANICAL PIPING PLAN

bcra

© COPYRIGHT 2023 - BCRA, INC. ALL RIGHTS RESERVED

SHEET

M-221

100% DESIGN DEVELOPMENT

IF SHEET MEASURES LESS THAN 22"X34", IT IS A REDUCED PRINT. REDUCE SCALE ACCORDINGLY

22x34 12/13/2023 4:58:06 PM

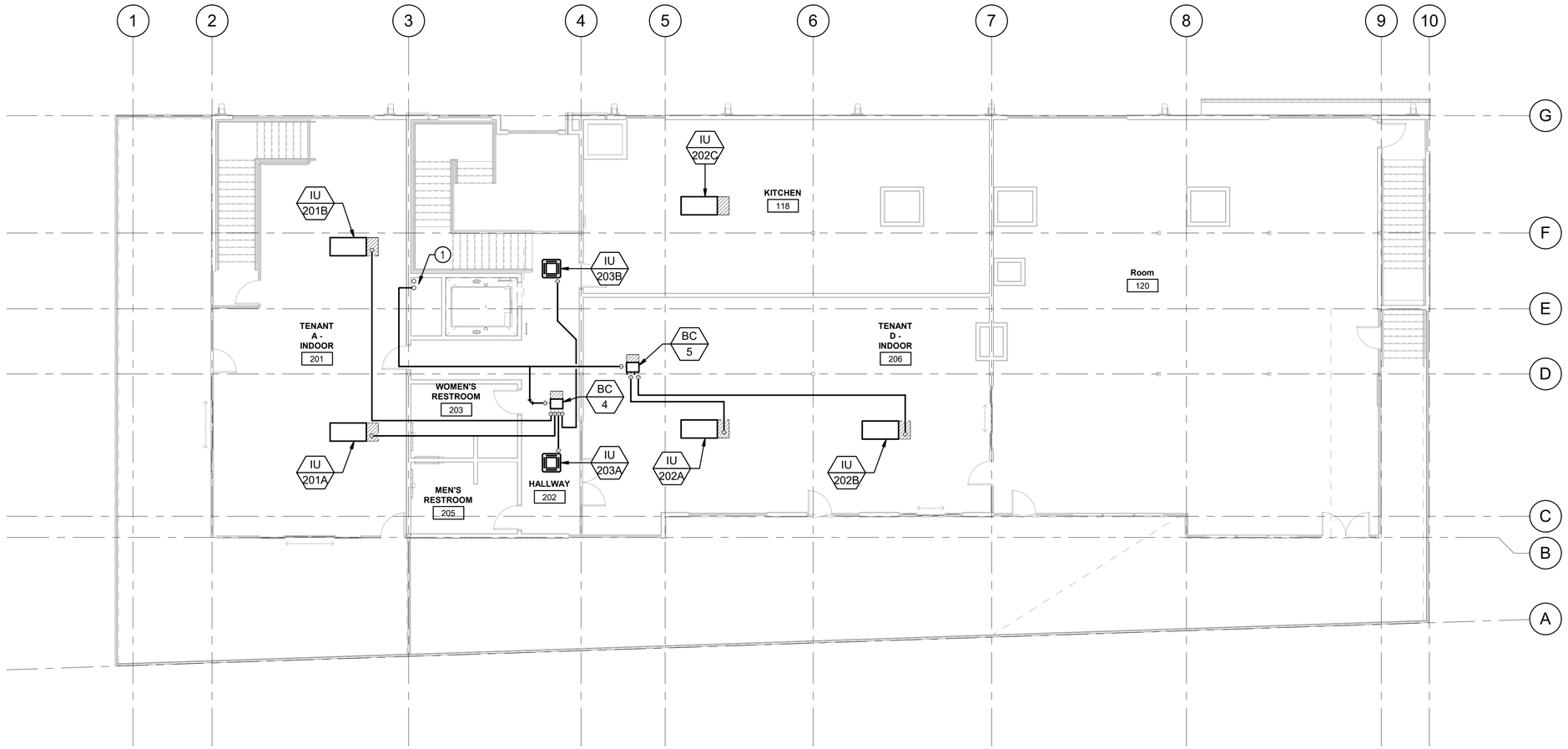

1 SECOND FLOOR MECHANICAL PIPING PLAN

1/8" = 1'-0"

TRUE NORTH

0 4 8 16

SCALE: 1/8" = 1'-0"

CONSTRUCTION NOTES

1. REFRIGERANT PIPING DOWN TO FIRST FLOOR AND UP TO ROOF.

GENERAL NOTES

1. PIPING IS SCHEMATIC IN NATURE, CONTRACTOR TO PROVIDE ADDITIONAL FITTINGS AND OFFSETS, AS REQUIRED, TO INSTALL A COMPLETE AND FUNCTIONING SYSTEM.
2. SINGLE LINE SHOWN ON PLANS DESIGNATES THE PROPOSED ROUTING AND REPRESENTS ALL THE REQUIRED PIPING RUNS FOR THE SYSTEM.
3. ALL EQUIPMENT AND PIPING TO BE PROVIDED BY SHELL/CORE PROJECT UNLESS NOTED OTHERWISE TO BE PROVIDED BY FUTURE TI.

bcra
T 253.627.4367 F 253.627.4395 WWW.BCRADESIGN.COM
2106 PACIFIC AVENUE, SUITE 300, TACOMA, WA 98402

SEAL

BCE engineers, inc.
6021 12th Street East, Suite 200
Fife, Washington 98424
T: 253.922.0446
F: 253.922.0896

PROJECT
PORT OF EVERETT
WINE WALK BUILDING A12
XXXX SEINER DRIVE
EVERETT, WASHINGTON 98201

REVISIONS

DATE
12.13.2023

BCRA NO.
23045.00.00

DRAWN BY: Author

REVIEWED BY:

SHEET TITLE
SECOND FLOOR MECHANICAL PIPING PLAN

bcra

© COPYRIGHT 2023 - BCRA, INC. ALL RIGHTS RESERVED

SHEET

M-222

100% DESIGN DEVELOPMENT

IF SHEET MEASURES LESS THAN 22"X34", IT IS A REDUCED PRINT. REDUCE SCALE ACCORDINGLY

22x34 12/13/2023 4:08:07 PM

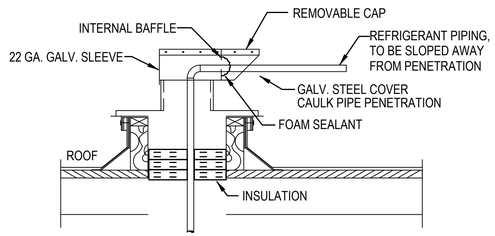

REFRIGERANT PIPING THROUGH ROOF INSTALLATION DETAIL

1 SCALE: DIAGRAMMATIC

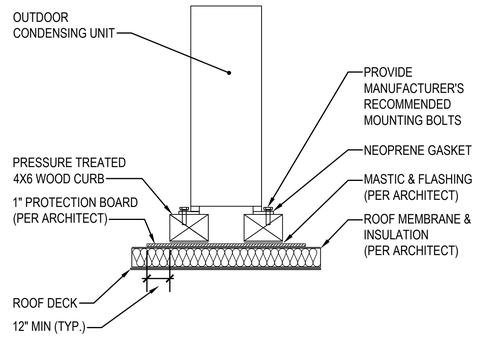

ROOFTOP CONDENSING UNIT SUPPORT DETAIL

3 SCALE: DIAGRAMMATIC

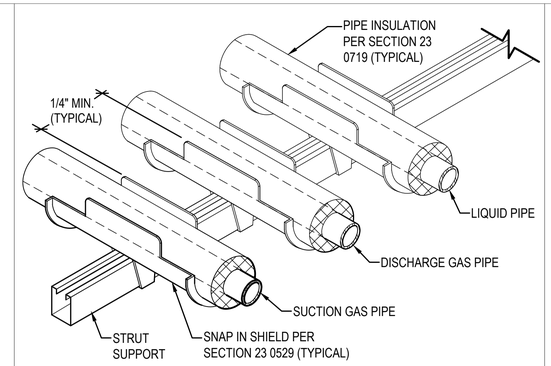

NOTES:

1. SUCTION GAS, DISCHARGE GAS, AND LIQUID PIPES SHALL BE INDIVIDUALLY SUPPORTED. AT NO TIME SHALL PIPES BE COMBINED AND INSTALLED WITHIN THE SAME SNAP IN SHIELD SUPPORT.
2. DETAIL APPLIES TO STRUT AND TRAPEZE STYLE SUPPORTS.

REFRIGERANT PIPE SUPPORT DETAIL

2 SCALE: NOT TO SCALE

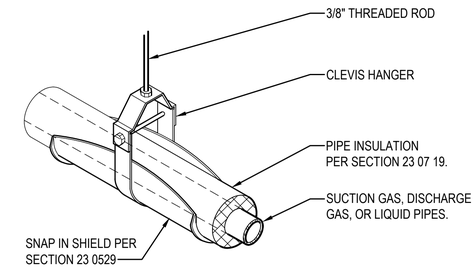

NOTE:

1. SUCTION GAS, DISCHARGE GAS, AND LIQUID PIPES SHALL BE INDIVIDUALLY SUPPORTED. AT NO TIME SHALL PIPES BE COMBINED AND INSTALLED WITHIN THE SAME CLEVIS HANGER.

REFRIGERANT PIPE CLEVIS HANGER SUPPORT DETAIL

1 SCALE: NOT TO SCALE

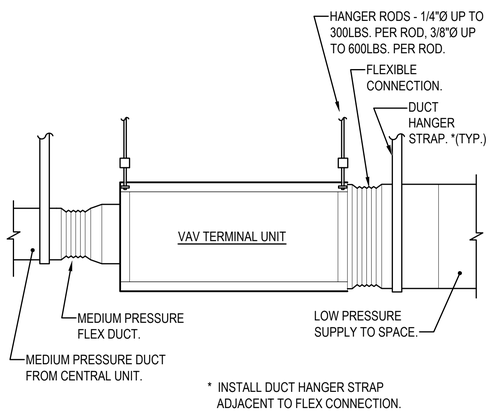

VAV TERMINAL UNIT INSTALLATION DETAIL

8 SCALE: DIAGRAMMATIC

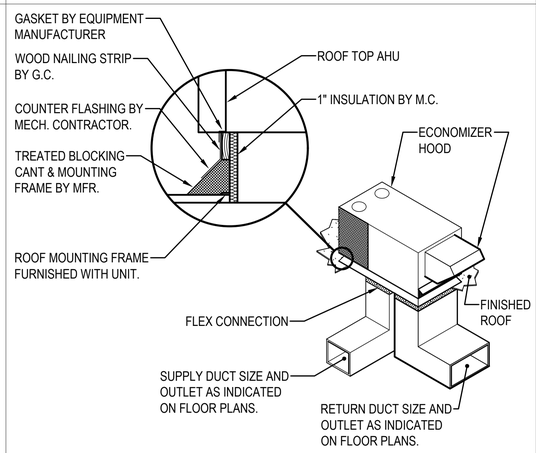

TYPICAL ROOF MOUNTED HVAC UNIT INSTALLATION DETAIL

12 SCALE: DIAGRAMMATIC

NOTE:
MAINTAIN ACCESS CLEARANCE ON BOTH SIDES FOR SERVICE OF BLOWER

* INSTALL DUCT HANGER STRAPS ADJACENT TO FLEX CONNECTION

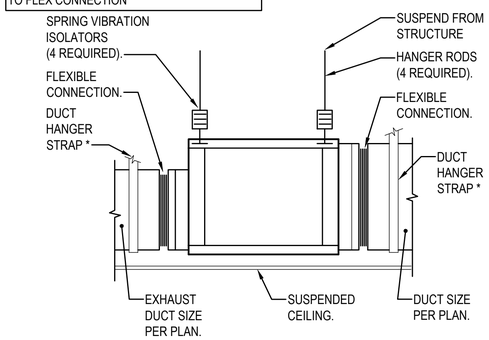

TYPICAL EXHAUST FAN INSTALLATION DETAIL

6 SCALE: DIAGRAMMATIC

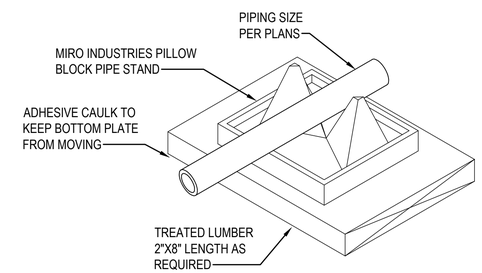

ROOFTOP PIPING INSTALLATION DETAIL

5 SCALE: DIAGRAMMATIC

bcra
T 253.627.4367 F 253.627.4395 WWW.BCRADESIGN.COM
2106 PACIFIC AVENUE, SUITE 300, TACOMA, WA 98402

SEAL

PROJECT
PORT OF EVERETT
WINE WALK BUILDING A12
XXXX SEINER DRIVE
EVERETT, WASHINGTON 98201

REVISIONS

DATE: 12.13.2023
BCRA NO.: 23045.00.00
DRAWN BY: --
REVIEWED BY: --
SHEET TITLE
MECHANICAL DETAILS I

bcra
© COPYRIGHT 2023 - BCRA, INC. ALL RIGHTS RESERVED

SHEET
M-501

100% DESIGN DEVELOPMENT

22x34 6/9/2023 1:12:43 PM

IF SHEET MEASURES LESS THAN 22"X34", IT IS A REDUCED PRINT. REDUCE SCALE ACCORDINGLY

DEDICATED OUTSIDE AIR UNIT SCHEDULE

UNIT NO	MFR	MODEL	LOCATION	AREA SERVED	SUPPLY FAN DATA						RETURN FAN DATA						TOTAL FAN POWER (W/CFM)	DX COIL DATA					HEAT EXCHANGER DATA - HEATING							FILTERS	ELECTRICAL FOR SUPPLY FANS					ELECTRICAL FOR RETURN FAN					WEIGHT (LBS)	STARTER FURNISHED BY	DISCONNECT FURNISHED BY	DUCT SMOKE DETECTOR FURNISHED BY	REMARKS
					TOTAL CFM	QTY	HP	BHP	ESP	RPM	TOTAL CFM	QTY	HP	BHP	ESP	RPM		EDB	EWB	REQ'D TOTAL MBH	REQ'D SENSIBLE MBH	UNIT LAT (DB)	EFFECTIVENESS	OSA		RETURN		SUPPLY				MCA	MOP	FLA	VOLTS	PH	MCA	MOP	FLA	VOLTS	PH					
																								DB EAT	WB EAT	DB EAT	WB EAT	DB EAT	WB EAT																
DOAU-1	DAIKIN		ROOF	BLDG A12	7990						7990																			NOTE 8				208	3				208	3		MFR	EC	NOTE 3	1,2,4,5,6,7,9,10,11, 12,13,14,15,16

NOTES FOR DEDICATED OUTSIDE AIR UNIT SCHEDULE

1. PROVIDE WITH MULTIPLE POINT POWER CONNECTIONS. SUPPLY AND RETURN FANS ELECTRICAL CONNECTIONS LISTED IN SCHEDULE. PROVIDE 120V CONNECTION FOR AHU CONTROLS.
2. PROVIDE UNIT WITH INSULATED DOUBLE WALL CONSTRUCTION.
3. INSTALL SMOKE DETECTORS PROVIDED BY FIRE ALARM CONTRACTOR IN SUPPLY AND RETURN AIR DUCTS ADJACENT TO HEAT RECOVERY UNIT, MC TO COORDINATE WITH EC ON LOCATION OF ALL DETECTORS PRIOR TO INSTALLATION.
4. PROVIDE FANS WITH EC MOTORS.
5. PROVIDE WITH CONDENSATE DRAIN CONNECTION.
6. ALL FANS SHALL BE INTERNALLY SPRING ISOLATED WITH MINIMUM 0.75" STATIC DEFLECTION. ALL FAN SECTIONS SHALL BE PROVIDED WITH PERFORATED LINER.
7. MINIMUM SHORT CIRCUIT CURRENT RATING OF XXX A.
8. PROVIDE MERV-8 RETURN FILTERS AND MERV-13 ON MIXED AIR UPSTREAM OF REFRIGERANT COIL, PROVIDE MERV-8 PRE-FILTERS ON RETURN AIR AND OUTSIDE AIR UPSTREAM OF HEAT RECOVERY SECTION.
9. SUPPLY AND RETURN DUCT CONNECTIONS SHALL BE ON SIDE OF UNIT, SEE FLOOR PLANS FOR MORE INFORMATION.
10. MAXIMUM UNIT DIMENSIONS SHALL BE xxx"L X xxx"W X xxx"H (INCLUDING CURB), MAXIMUM UNIT WEIGHT SHALL BE xxx LBS (INCLUDING CURB).
11. REFRIGERANT COIL EEV KITS SHALL BE SELECTED FOR DISCHARGE AIR TEMPERATURE CONTROL.
12. PROVIDE HOODS ON ALL OA INTAKES.
13. PROVIDE UNIT WITH MANUFACTURER'S SEISMIC NON-ISOLATING CURB, MINIMUM xx" TALL.
14. PROVIDE FIXED PLATE HEAT EXCHANGER FOR HEAT RECOVERY.
15. SEE VRF INDOOR UNIT SCHEDULE FOR COIL CONNECTION INFORMATION.
16. DOAU COMPLIES WITH C406.7 HIGH PERFORMANCE DEDICATED OUTDOOR AIR SYSTEM.

VRF OUTDOOR CONDENSING UNIT SCHEDULE

UNIT NO	MFR	MODEL	LOCATION	INTERLOCKED WITH	NOMINAL TONS	COOLING		HEATING		ELECTRICAL				STARTER FURNISHED BY	DISCONNECT FURNISHED BY	WEIGHT (LBS)	REMARKS
						IEER	TOTAL MBH	COP (17°F)	TOTAL MBH	MCA	MOP	VOLTS	PH				
OCU-1	DAIKIN	RELQ	ROOF									208	3	MFR	EC		1,2,3,4,5,6,7,8
OCU-2	DAIKIN	RELQ	ROOF									208	3	MFR	EC		1,2,3,4,5,6,7,8
OCU-3	DAIKIN	RELQ	ROOF									208	3	MFR	EC		1,2,3,4,5,6,7,8
OCU-4	DAIKIN	RELQ	ROOF									208	3	MFR	EC		1,2,3,4,5,6,7,8

NOTES FOR VRF OUTDOOR CONDENSING UNIT SCHEDULE

1. UNIT COMPRISED OF TWO SEPARATE CONDENSING UNITS.
2. EACH MODULE TO INCLUDE SEPARATE POWER CONNECTIONS AND DISCONNECTS.
3. PROVIDE WITH FACTORY TWINNING KIT TO LINK MODULES PER PLANS.
4. UNIT USES R-410A REFRIGERANT. PROVIDE ADDITIONAL REFRIGERANT TO FULLY CHARGE SYSTEM AS REQUIRED
5. EFFICIENCY VALUES FOR IEER AND COP ARE BASED ON AHRI 1230 TEST METHOD FOR MIXTURE OF DUCTED & NON-DUCTED INDOOR UNITS.
6. NOMINAL COOLING CAPACITIES ARE BASED ON INDOOR COIL E.A.T. OF 80/67°F (DB/WB), OUTDOOR OF 95°F (DB). NOMINAL HEATING CAPACITIES ARE BASED ON INDOOR COIL E.A.T. OF 70°F (DB), OUTDOOR OF 0°F.
7. SEE SCHEMATIC PIPING/CONTROL DIAGRAM FOR INDICATION OF REQUIRED INDOOR UNIT REMOTE CONTROLLERS, SYSTEM CONTROLLERS, AND INTEGRATION DEVICES.
8. EQUIPMENT COMPLIES WITH C406.2 MORE EFFICIENT HVAC EQUIPMENT AND FAN PERFORMANCE.

VRF INDOOR UNIT SCHEDULE

UNIT NO	MFR	MODEL	LOCATION	AREA SERVED	INTERLOCKED WITH	TYPE	CFM	COOLING MBH	HEATING MBH	ELECTRICAL				STARTER FURNISHED BY	DISCONNECT FURNISHED BY	WEIGHT (LBS)	REMARKS
										MCA	MOP	VOLTS	PH				
IU-101A	DAIKIN	FXSQ	TENANT A - 1ST FLOOR		OU-X	FAN COIL					15	208	1	MFR	EC		1,2
IU-101B	DAIKIN	FXSQ	TENANT A - 1ST FLOOR		OU-X	FAN COIL					15	208	1	MFR	EC		1,2
IU-101C	DAIKIN	FXSQ	TENANT A - 1ST FLOOR		OU-X	FAN COIL					15	208	1	MFR	EC		1,2
IU-102A	DAIKIN	FXSQ	TENANT B.1		OU-X	FAN COIL					15	208	1	MFR	EC		1,2
IU-102B	DAIKIN	FXSQ	TENANT B.1		OU-X	FAN COIL					15	208	1	MFR	EC		1,2
IU-103A	DAIKIN	FXSQ	TENANT B.2		OU-X	FAN COIL					15	208	1	MFR	EC		1,2
IU-103B	DAIKIN	FXSQ	TENANT B.2		OU-X	FAN COIL					15	208	1	MFR	EC		1,2
IU-104A	DAIKIN	FXSQ	TENANT C		OU-X	FAN COIL					15	208	1	MFR	EC		1,2
IU-104B	DAIKIN	FXSQ	TENANT C		OU-X	FAN COIL					15	208	1	MFR	EC		1,2
IU-105A	DAIKIN	FXZQ	HALLWAY		OU-X	WALL MOUNT					15	208	1	MFR	EC		1,2
IU-105B	DAIKIN	FXZQ	HALLWAY		OU-X	WALL MOUNT					15	208	1	MFR	EC		1,2
IU-201A	DAIKIN	FXSQ	TENANT A - 2ND FLOOR		OU-X	FAN COIL					15	208	1	MFR	EC		1,2
IU-201B	DAIKIN	FXSQ	TENANT A - 2ND FLOOR		OU-X	FAN COIL					15	208	1	MFR	EC		1,2
IU-202A	DAIKIN	FXSQ	TENANT D		OU-X	FAN COIL					15	208	1	MFR	EC		1,2
IU-202B	DAIKIN	FXSQ	TENANT D		OU-X	FAN COIL					15	208	1	MFR	EC		1,2
IU-202C	DAIKIN	FXSQ	TENANT D - KITCHEN		OU-X	FAN COIL					15	208	1	MFR	EC		1,2
IU-203A	DAIKIN	FXSQ	HALLWAY		OU-X	2'x2' CEILING CASSETTE					15	208	1	MFR	EC		1,2
IU-203B	DAIKIN	FXZQ	HALLWAY		OU-X	2'x2' CEILING CASSETTE					15	208	1	MFR	EC		1,2
DOAU COIL 1	DAIKIN	EKEXV250-US	DOAU-1		OU-X	DOAU COIL				-	-	24	1	-	-		1

NOTES FOR VRF INDOOR UNIT SCHEDULE

1. EC TO PROVIDE SINGLE POINT POWER CONNECTION. CC TO INSTALL CONTROL WIRING BETWEEN INDOOR AND OUTDOOR UNITS.
2. PROVIDE WITH MANUFACTURER'S INTERNAL CONDENSATE PUMP.

bcra
T 253.627.4367 F 253.627.4395 WWW.BCRADESIGN.COM
2106 PACIFIC AVENUE, SUITE 300, TACOMA, WA 98402

SEAL

PROJECT
PORT OF EVERETT
WINE WALK BUILDING A12
XXXX SEINER DRIVE
EVERETT, WASHINGTON 98201

REVISIONS

DATE
12.13.2023

BCRA NO.
23045.00.00

DRAWN BY: --

REVIEWED BY: --

SHEET TITLE
MECHANICAL SCHEDULES I

bcra
© COPYRIGHT 2023 - BCRA, INC. ALL RIGHTS RESERVED

SHEET
M-601

100% DESIGN DEVELOPMENT

22x34 6/9/2023 1:12:43 PM

IF SHEET MEASURES LESS THAN 22"X34", IT IS A REDUCED PRINT. REDUCE SCALE ACCORDINGLY

EXHAUST FAN SCHEDULE

UNIT NO	MANUFACTURER	MODEL	LOCATION	CONFIGURATION	AREA SERVED	PERFORMANCE			DAMPER	SPEED CONTROL	CONTROLLED BY OR INTERLOCKED WITH	HP	BHP	ELECTRICAL		STARTER FURNISHED BY	DISCONNECT FURNISHED BY	WEIGHT (LBS)	REMARKS
						CFM	ESP	RPM						VOLTS	PH				
EF-1	GREENHECK	G-098-VG	ROOF	DOWNBLAST	TRASH	500			NOTE 5	ECM, NOTE 4	T'STAT			115	1	NOTE 3	NOTE 3		1,2
EF-2	GREENHECK	SQ-95-VG	ELECTRICAL	INLINE	ELECTRICAL / FIRE RISER	600			NOTE 5	ECM, NOTE 4	T'STAT			115	1	NOTE 3	NOTE 3		1,2
EF-X	GREENHECK	CUE-XXX-VG	ROOF	UPBLAST	FUTURE TI	-	-	-	-	-	-	-	-	-	-	-	-	-	7

NOTES FOR EXHAUST FAN SCHEDULE

1. ALL EXHAUST FANS TO BE WIRED FROM MOTOR TO BOX ON EXTERIOR OF FAN ENCLOSURE
2. SPEED CONTROL TO BE FACTORY WIRED TO THE OUTSIDE CABINET OF INLINE FANS
3. EC TO PROVIDE A MANUAL STARTER (INCLUDING DISCONNECT), MC TO PROVIDE A MOTOR RATED RELAY FOR INTERLOCK
4. PROVIDE MOTOR MOUNTED POTENTIOMETER DIAL FOR SPEED CONTROL
5. PROVIDE WITH CLASS 1A LOW LEAKAGE AIRFOIL BLADE MOTORIZED DAMPER, PROVIDE WITH APPROPRIATE LINKAGE TO MOUNT DAMPER ACTUATOR IN THE AIRSTREAM, PROVIDE WITH HINGED BASE FOR ACCESS
6. SPEED CONTROL TO BE FACTORY WIRED TO THE INSIDE HOUSING OF ROOFTOP FANS
7. UNIT SHOWN FOR INFORMATION ONLY, FUTURE EXHAUST FAN TO BE INSTALLED BY TENANT TI.

EXHAUST VAV BOX SCHEDULE

UNIT NO	MANUFACTURER	MODEL	AREA SERVED	SERVED BY	VARIABLE / CONSTANT	PRIMARY AIR VALVE			ESP (IN W.C.)	REMARKS
						DIAMETER (IN)	MIN CFM	MAX CFM		
EVAV-101	NAILOR	D30X	TENANT A	DOAU-1	VARIABLE	16	905	1810	0.50	1,2,3
EVAV-102	NAILOR	D30X	TENANT B.1	DOAU-1	VARIABLE	12	405	810	0.50	1,2,3
EVAV-103	NAILOR	D30X	TENANT B.2	DOAU-1	VARIABLE	12	338	675	0.50	1,2,3
EVAV-104	NAILOR	D30X	TENANT C	DOAU-1	VARIABLE	14	455	910	0.50	1,2,3
EVAV-105	NAILOR	D30X	TENANT RESTROOMS	DOAU-1	CONSTANT	10	400	400	0.50	1,2,3
EVAV-106	NAILOR	D30X	PUBLIC RESTROOMS	DOAU-1	CONSTANT	10	400	400	0.50	1,2,3
EVAV-201	NAILOR	D30X	TENANT D	DOAU-1	VARIABLE	14	650	1300	0.50	1,2,3
EVAV-202	NAILOR	D30X	TENANT E	DOAU-2	VARIABLE	16	845	1690	0.50	1,2,3
EVAV-203	NAILOR	D30X	2ND FLOOR TENANT RESTROOMS	DOAU-1	CONSTANT	10	300	300	0.50	1,2,3

NOTES FOR VAV BOX SCHEDULE

1. PROVIDE MINIMUM 3 DUCT DIAMETERS STRAIGHT RUN OF DUCT AT INLET SIDE UPSTREAM OF THE VAV BOX
2. TRANSITION DUCT FROM THE SIZE SHOWN ON THE PLAN TO THE INLET SIZE OF THE VAV BOX
3. SEE FLOOR PLANS FOR CONTROLS / COIL ACCESS LOCATION

VAV BOX SCHEDULE

UNIT NO	MANUFACTURER	MODEL	AREA SERVED	SERVED BY	PRIMARY AIR VALVE			ESP (IN W.C.)	ELECTRICAL		REMARKS
					DIAMETER (IN)	MIN CFM	MAX CFM		VOLTS	PH	
VAV-101	NAILOR	D3001	TENANT A - 1ST FLOOR	DOAU-1	12	575	1150	0.50	NOTE 4		1,2,3,5
VAV-102	NAILOR	D3001	TENANT B.1	DOAU-1	12	450	900	0.50	NOTE 4		1,2,3,5
VAV-103	NAILOR	D3001	TENANT B.2	DOAU-1	12	375	750	0.50	NOTE 4		1,2,3,5
VAV-104	NAILOR	D3001	TENANT C	DOAU-1	12	505	1010	0.50	NOTE 4		1,2,3,5
VAV-201	NAILOR	D3001	TENANT A - 2ND FLOOR	DOAU-1	12	430	860	0.50	NOTE 4		1,2,3,5
VAV-202	NAILOR	D3001	TENANT D	DOAU-2	14	720	1440	0.50	NOTE 4		1,2,3,5
VAV-203	NAILOR	D3001	TENANT E	DOAU-2	16	940	1880	0.50	NOTE 4		1,2,3,5

NOTES FOR VAV BOX SCHEDULE

1. EC TO PROVIDE DISCONNECT. MC TO PROVIDE AND INSTALL MOTOR RATED RELAY FOR INTERLOCK.
2. PROVIDE MINIMUM 3 DUCT DIAMETERS STRAIGHT RUN OF DUCT AT INLET SIDE UPSTREAM OF THE VAV BOX
3. TRANSITION DUCT FROM THE SIZE SHOWN ON THE PLAN TO THE INLET SIZE OF THE VAV BOX
4. EC TO PROVIDE 120VAC, 15 AMP CIRCUIT TO ALL UNITS FOR CONTROL POWER, EACH 120VAC, 15 AMP CIRCUIT SHALL POWER UP TO 20 CONTROLLERS
5. SEE FLOOR PLANS FOR CONTROLS / COIL ACCESS LOCATION

ELECTRIC UNIT HEATER SCHEDULE

UNIT NO	MANUFACTURER	MODEL	LOCATION	WEIGHT (LBS)	LENGTH (FT - IN)	MOUNTING HEIGHT (FT - IN)	ELECTRICAL			STARTER FURNISHED BY	DISCONNECT FURNISHED BY	REMARKS
							WATTS	VOLTS	PH			
EWH-1	KING	PAW	TRASH					120	1	MFR	MFR	1,2
EWH-2	KING	PAW	FIRE RISER					120	1	MFR	MFR	1,2
EWH-3	KING	PAW	MEN'S PUBLIC RESTROOM					120	1	MFR	MFR	1,2
EWH-4	KING	PAW	WOMEN'S PUBLIC RESTROOM					120	1	MFR	MFR	1,2
EWH-5	KING	PAW	2ND FLOOR - WOMEN'S RESTROOM					120	1	MFR	MFR	1,2
EWH-6	KING	PAW	2ND FLOOR - MEN'S RESTROOM					120	1	MFR	MFR	1,2

NOTES FOR ELECTRIC UNIT HEATER SCHEDULE

1. PROVIDE WITH SINGLE POLE INTEGRAL DISCONNECT SWITCH AND THERMOSTAT.
2. PROVIDE WITH SURFACE MOUNTING KIT.

SPLIT SYSTEM CONDENSING UNIT SCHEDULE

UNIT NO	MANUFACTURER	MODEL	LOCATION	COOLING		ELECTRICAL				STARTER FURNISHED BY	DISCONNECT FURNISHED BY	WEIGHT (LBS)	REMARKS
				SEER	TOTAL MBH	MCA	MOP	VOLTS	PH				
OCU-1	DAIKIN	RK24	ROOF	19.0	21.2	13.4	20	208	1	MFR	EC	120	1,2,3,4,5

NOTES FOR SPLIT SYSTEM CONDENSING UNIT SCHEDULE

1. EC TO PROVIDE SINGLE POINT POWER CONNECTION. INDOOR UNIT IS POWERED THROUGH OUTDOOR UNIT. CC TO INSTALL CONTROL WIRING BETWEEN INDOOR AND OUTDOOR UNITS.
2. UNIT USES R-410A REFRIGERANT. PROVIDE LONG LINE LENGTH KIT AND ADDITIONAL REFRIGERANT AS REQUIRED
3. PROVIDE LOW AMBIENT COOLING TO 0F.
4. PROVIDE INVERTER DRIVEN COMPRESSORS FOR VARIABLE CAPACITY OPERATION.
5. UNIT COMPLIES WITH ECONOMIZER EXCEPTION 11 PER WSEC C403.5.

VRF BRANCH SELECTOR SCHEDULE

UNIT NO	MFR	MODEL	LOCATION	NUMBER OF PORTS	UNITS SERVED	ELECTRICAL				STARTER FURNISHED BY	DISCONNECT FURNISHED BY	WEIGHT (LBS)	REMARKS
						MCA	MOP	VOLTS	PH				
BS-1	DAIKIN		HALLWAY - 1ST FLOOR				15	208	1	MFR	EC		1
BS-2	DAIKIN		TENANT B.1 - 1ST FLOOR				15	208	1	MFR	EC		1
BS-3	DAIKIN		TENANT B.2 - 1ST FLOOR				15	208	1	MFR	EC		1
BS-4	DAIKIN		HALLWAY - 2ND FLOOR				15	208	1	MFR	EC		1
BS-5	DAIKIN		TENANT D - 2ND FLOOR				15	208	1	MFR	EC		1

NOTES FOR VRF BRANCH SELECTOR SCHEDULE

1. PROVIDE STOP VALVES ON ALL PORTS TO ISOLATE INDIVIDUAL BRANCHES, INCLUDING UNUSED PORTS. CAP UNUSED PORTS.

SPLIT SYSTEM INDOOR UNIT SCHEDULE

UNIT NO	MANUFACTURER	MODEL	LOCATION	INTERLOCKED WITH	MOUNTING	CFM	COOLING	ELECTRICAL				STARTER FURNISHED BY	DISCONNECT FURNISHED BY	WEIGHT (LBS)	REMARKS
							TOTAL MBH	MCA	FLA	VOLTS	PH				
ICU-1	DAIKIN	FTK24	ELEVATOR MECHANICAL	OCU-1	WALL	605	21.2	1.0	0.5	208	1	MFR	EC	35	1,2,3,4

NOTES FOR SPLIT SYSTEM INDOOR UNIT SCHEDULE

1. INDOOR UNIT IS POWERED THROUGH OUTDOOR UNIT. CC TO INSTALL CONTROL WIRING BETWEEN INDOOR AND OUTDOOR UNITS.
2. PROVIDE WITH MANUFACTURER'S INTERNAL CONDENSATE PUMP.
3. MOUNT UNIT ABOVE DOOR, COORDINATE FINAL LOCATION WITH EC.
4. PROVIDE WITH MANUFACTURER'S WIRED WALL MOUNTED THERMOSTAT.

bcra
T 253.627.4367 F 253.627.4395 WWW.BCRADESIGN.COM
2106 PACIFIC AVENUE, SUITE 300, TACOMA, WA 98402

SEAL

PROJECT
PORT OF EVERETT
WINE WALK BUILDING A12
XXXX SEINER DRIVE
EVERETT, WASHINGTON 98201

REVISIONS

DATE
12.13.2023
BCRA NO.
23045.00.00
DRAWN BY: --
REVIEWED BY: --
SHEET TITLE
MECHANICAL SCHEDULES II

bcra
© COPYRIGHT 2023 - BCRA, INC. ALL RIGHTS RESERVED
SHEET
M-602
100% DESIGN DEVELOPMENT

22x34 6/9/2023 1:12:43 PM

IF SHEET MEASURES LESS THAN 22"X34", IT IS A REDUCED PRINT. REDUCE SCALE ACCORDINGLY

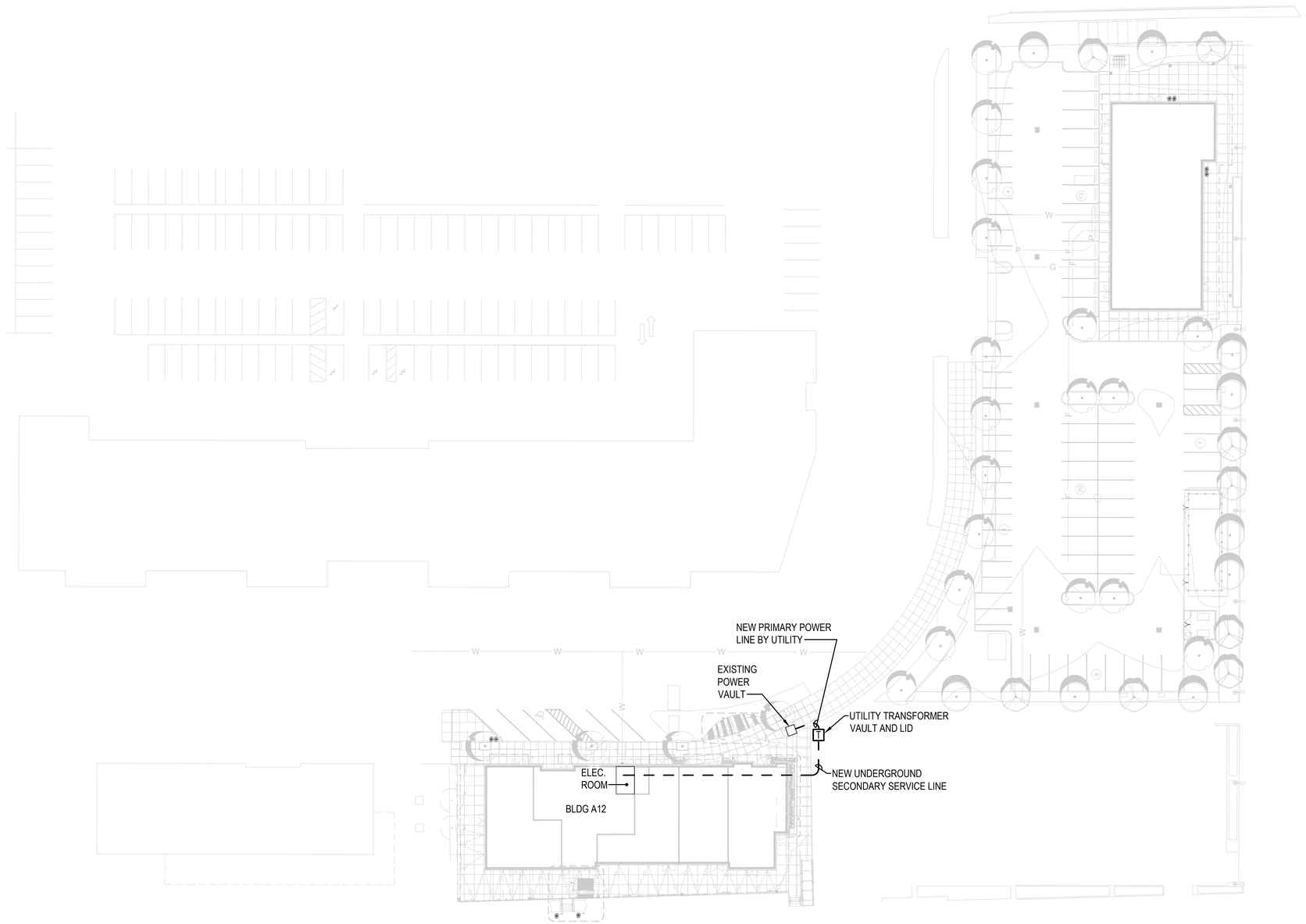

1 ELECTRICAL SITE PLAN

SCALE: 1"=30'-0"

N

20' 10' 0 30' 60'

SCALE: 1"=30'-0"

bcra

T 253.627.4367 F 253.627.4395 WWW.BCRADESIGN.COM
2106 PACIFIC AVENUE, SUITE 300, TACOMA, WA 98402

SEAL

MICHAEL L. COZART
STATE OF WASHINGTON
34306
REGISTERED
PROFESSIONAL ENGINEER

PROJECT
PORT OF EVERETT
WINE WALK BUILDING A12
XXXX SEINER DRIVE
EVERETT, WASHINGTON 98201

REVISIONS

DATE
12.13.2023

BCRA NO.
23045.00.00

DRAWN BY:

REVIEWED BY:

SHEET TITLE
BLDG A12 ELECTRICAL SITE PLAN

bcra

© COPYRIGHT 2023 - BCRA, INC. ALL RIGHTS RESERVED

SHEET

E-100

100% DESIGN DEVELOPMENT

22x34 6/9/2023 1:12:43 PM

IF SHEET MEASURES LESS THAN 22"X34", IT IS A REDUCED PRINT. REDUCE SCALE ACCORDINGLY

ELECTRICAL LEGEND

SYMBOL	DESCRIPTION
	WALL MOUNT LIGHT FIXTURE
	SURFACE OR PENDANT MOUNT STRIP LIGHT (CIRCLE INDICATES RECESSED OR CONCEALED JUNCTION BOX)
	SURFACE OR PENDANT MOUNT LIGHT FIXTURE (CIRCLE INDICATES RECESSED OR CONCEALED JUNCTION BOX)
	EGRESS FIXTURE WITH EMERGENCY BATTERY PACK. PROVIDE ADDITIONAL UNSWITCHED HOT LEG FROM INDICATED CIRCUIT FOR VOLTAGE SENSING AND BATTERY CHARGING.
	EXIT LIGHT FIXTURE (PROVIDE DIRECTION ARROWS AS INDICATED) PROVIDE ADDITIONAL UNSWITCHED HOT LEG.
	DUPLEX RECEPTACLE
G,W S	SWITCH GFCI RECEPTACLE IN WEATHERPROOF ENCLOSURE.
	FOURPLEX RECEPTACLE
	DEDICATED CONDUIT HOMERUN TO PANEL & CIRCUIT NUMBERS AS INDICATED ON PLANS
	RACEWAY CONCEALED IN WALL OR CEILING
	GROUNDING
	PROVIDE 4" SQ DEEP BACKBOX W/MUDRING & 1-1/4" C.O. TO ACCESSIBLE CEILING SPACE.
	120/208 VOLT PANELBOARD (OR AT RATED VOLTAGE AS NOTED)
	EXISTING PANELBOARD TO BE RETAINED
J	JUNCTION BOX - SIZE PER CODE
1	CONSTRUCTION NOTES
$	ALL DEVICES WITH LIGHT LINE WEIGHT INDICATES EXISTING TO BE RETAINED. SEE GENERAL NOTES ON EACH SHEET.
$	ALL DEVICES WITH DASH LINE INDICATES EXISTING TO BE REMOVED

ABBREVIATIONS

G	GROUND FAULT CIRCUIT INTERRUPTER	UC	UNDERCOUNTER
C	MOUNT ABOVE COUNTER	UG	UNDERGROUND
DW	DISHWASHER	GR	GROUND
EC	ELECTRICAL CONTRACTOR	FACP	FIRE ALARM CONTROL PANEL
TTB	TELEPHONE TERMINAL BOARD	CP	COPIER
MW	MICROWAVE	P.B.	PUSH BUTTON
REF	REFRIGERATOR	VM	VENDING MACHINE
TV	TELEVISION		

GENERAL NOTES (APPLY TO ALL SHEET)

1. THE CONTRACTOR SHALL REFER TO STRUCTURAL DRAWINGS FOR BRACE FRAMED OR SHEAR WALLS. CONTRACTOR SHALL MOUNT DEVICES AND ROUTE CONDUIT SO AS NOT TO INTERFERE WITH THE STRUCTURAL INTEGRITY OF THE WALL.
2. ROOMS AND/OR AREAS WITHOUT CEILINGS SHALL HAVE ALL CABLES ROUTED IN CONDUIT. CONDUIT SHALL BE INSTALLED TIGHT TO STRUCTURE, ROUTED PARALLEL OR PERPENDICULAR TO STRUCTURE, AND SHALL BE PAINTED TO MATCH ADJACENT SURFACE.
3. PANEL DESIGNATIONS AND CIRCUIT NUMBERS ARE ONLY INDICATED ON THE DRAWINGS FOR REFERENCE BY THE ELECTRICAL CONTRACTOR. THE E.C. IS RESPONSIBLE TO PROVIDE ALL CONDUIT, WIRING, JUNCTION BOXES AND MISCELLANEOUS ACCESSORIES TO ACCOMMODATE INSTALLATION AND CONNECTION OF ALL DEVICES INDICATED ON THE CONTRACT DOCUMENTS. ALL WIRING SHALL BE IN HARD CONDUIT BACK TO THE DESIGNATED PANELBOARD. MC TYPE CABLE IS NOT AN ACCEPTABLE WIRING METHOD. ALL JUNCTION BOXES SHALL BE LABELED IDENTIFYING THE PANELBOARD AND CIRCUIT CONTAINED WITHIN. THERE SHALL BE NO MORE THAN (3) CIRCUITS PER HOMERUN. MULTI-WIRE CIRCUITS ARE NOT ALLOWED. EACH CIRCUIT SHALL CONTAIN A DEDICATED NEUTRAL UNLESS SPECIFICALLY ALLOWED BY THE ENGINEER. ALL WIRING SHALL BE SIZED ACCORDING TO AMPACITY OF THE CIRCUIT BREAKER INDICATED ON THE PANEL SCHEDULES. ALL CONDUIT SHALL BE SIZED PER NEC CODE BASED ON THE CONDUCTOR SIZE, TYPE, QUANTITY AND MINIMUM FILL REQUIREMENTS. CIRCUITS OVER 120 FEET FOR 120V AND 250' FOR 277V SHALL BE UP SIZED ONE WIRE SIZE TO ACCOUNT FOR VOLTAGE DROP. E.C. IS RESPONSIBLE TO SHOW ALL JUNCTION BOX LOCATIONS, CONDUIT ROUTING AND HOMERUNS ON A SET OF AS-BUILT DRAWINGS.
4. FEED THROUGH GFCI RECEPTACLES SHALL NOT BE USED.
5. THERE SHALL BE NO EXPOSED LOW VOLTAGE CABLING OF ANY TYPE IN EXPOSED FINISHED AREAS.
6. ALL SPARE CONDUITS (FOR FUTURE USE) SHALL BE LABELED "SPARE/FUTURE CONDUIT" AT EACH END OF THE CONDUIT WITH 1/2" TALL LETTERS, USING A PERMANENT MARKER.
7. FIRE CAULK ALL WALL PENETRATIONS AS REQUIRED. PROVIDE CONDUIT SLEEVES FOR ALL LOW VOLTAGE CABLES THROUGH NON-RATED WALLS.
8. ALL TYPICAL DEVICES SHALL BE MOUNTED AT CONSISTENT LOCATIONS AND HEIGHTS THROUGHOUT THIS PROJECT, UNLESS NOTED OTHERWISE.
9. SEE ALL DETAIL SHEETS AND RISER DIAGRAMS FOR ADDITIONAL WORK. ALL DETAILS AND RISERS ARE APPLICABLE TO THIS PROJECT WHETHER REFERENCED OR NOT.
10. ALL GROUNDING SHALL CONFORM TO NEC 250.
11. CIRCUITING SHALL BE PROVIDED AS REQUIRED TO MEET THE NEC. ALL SINGLE POLE CIRCUITS SHALL BE PROVIDED WITH DEDICATED NEUTRALS.
12. PROVIDE CUTTING AND PATCHING OF EXISTING WALLS TO ACCOMMODATE INSTALLATION OF NEW WORK.COORDINATE WITH G.C.

bcra
T 253.627.4367 F 253.627.4395 WWW.BCRADESIGN.COM
2105 PACIFIC AVENUE, SUITE 300, TACOMA, WA 98402

SEAL

PROJECT
PORT OF EVERETT
WINE WALK BUILDING A12
XXXX SEINER DRIVE
EVERETT, WASHINGTON 98201

REVISIONS

DATE
12.13.2023

BCRA NO.
23045.00.00

DRAWN BY:

REVIEWED BY:

SHEET TITLE
BLDG A12 ELECTRICAL LEGEND, ABBREVIATION & NOTES

bcra
© COPYRIGHT 2023 - BCRA, INC. ALL RIGHTS RESERVED

SHEET
E-101

100% DESIGN DEVELOPMENT

22x34 6/9/2023 1:12:43 PM

IF SHEET MEASURES LESS THAN 22"X34", IT IS A REDUCED PRINT. REDUCE SCALE ACCORDINGLY

GENERAL NOTES FOR LIGHTING FIXTURE SCHEDULE

1. SEE DRAWINGS FOR EMERGENCY LIGHTING FIXTURES.

2. FOR LIGHTING CONTROLS WHICH INCLUDE DAYLIGHT, OCCUPANCY SENSORS AND TIME CLOCK CONTROLS, THE ELECTRICAL CONTRACTOR SHALL PROVIDE TESTING OF THE CONTROL DEVICES, COMPONENTS, EQUIPMENT AND SYSTEMS TO MAKE SURE THEY ARE CALIBRATED, ADJUSTED AND OPERATE IN ACCORDANCE WITH DRAWINGS AND SPECIFICATIONS. SEQUENCES OF OPERATION SHALL BE FUNCTIONALLY TESTED IN THE PRESENCE OF THE ENGINEER. A COMPLETE REPORT OF TEST PROCEDURES AND RESULTS SHALL BE PREPARED AND FILED WITH THE OWNER.

3. FIXTURE TYPES LISTED ARE TO INDICATE THE TYPE OF STYLE, LAMPING CHARACTERISTICS AND MOUNTING REQUIRED TO FACILITATE THE DESIGN. OTHER FIXTURE MANUFACTURERS MEETING THE LIGHT FIXTURE TYPE CRITERIA ARE ACCEPTABLE UPON EVALUATION BY THE ENGINEER.

LIGHTING FIXTURE SCHEDULE

DESIGNATION	FIXTURE DESCRIPTION	MANUFACTURER/MODEL #	LAMPS	DELIVERED LUMENS	V	W	MOUNTING & REMARKS
PL1	PENDANT LED LIGHT - OVER STAIR						
RL1	6" LED DOWNLIGHT	PRESCOLITE LBRST-6RD-M-SL-WWCS9-WH-LBRST-6RD-T-SVR-LB-6R-F-TG	LED-35K	1800	120	21.3	
RL1E	6" LED DOWNLIGHT ON EMERGENCY LIGHTING INVERTER	PRESCOLITE LBRST-6RD-M-SL-WWCS9-WH-LBRST-6RD-T-SVR-LB-6R-F-TG	LED-35K	1800	120	21.3	
SL1	INDUSTRIAL SURFACE MOUNT/CHAIN HANG WITH INTEGRAL PHOTOCELL AND VACANCY SENSOR	LITHONIA LIGHTING CSS-L48-AL03-MVOLT-35K-80CRI/HC36-M12-VTX145FADC	LED-35K	3707	120	27.3	
SL1A	INDUSTRIAL SURFACE MOUNT/CHAIN HANG	LITHONIA LIGHTING CSS-L48-AL03-MVOLT-35K-80CRI/HC36-M12	LED-35K	3707	120	27.3	
SL2	ELEVATOR PIT SURFACE MOUNT LED	LITHONIA LIGHTING # CSVT L48 AL03 MVOLT SWW3 80CRI	LED-35K	5000	MVOLT	42	
SL3	1X4 SURFACE MOUNT WITH INTEGRAL MOTION SENSOR	KENALL MLHA8 48-R-*-PP-45L35K-1-12MS	LED-35K	4758	120	49	ARCHITECT TO SELECT COLOR
SL3E	1X4 SURFACE MOUNT ON EMERGENCY LIGHTING INVERTER	KENALL MLHA8 48-R-*-PP-45L35K-1-12MS	LED-35K	4758	120	49	ARCHITECT TO SELECT COLOR
SL4	8" DIAMETER SURFACE MOUNT CYLINDER DOWNLIGHT - EXTERIOR	WAC LIGHTING DS-CD08-F40-120-*	LED-40K	3945	120	46	ARCHITECT TO SELECT COLOR
SL4E	8" DIAMETER SURFACE MOUNT CYLINDER DOWNLIGHT - EXTERIOR ON EMERGENCY LIGHTING INVERTER	WAC LIGHTING DS-CD08-F40-120-*	LED-40K	3945	120	46	ARCHITECT TO SELECT COLOR
SL5	LED UPLIGHT FOR THE RAILINGS - COLOR CHANGING - LINEAR OR PAVER STYLE	KELVIX					
WL1	20"L WALL MOUNT ABOVE MIRROR	MODERN FORMS VOGUE - WS-3120-3500K-*-	LED-35K	2139	120	33.9	ARCHITECT TO SELECT FINISH
WL2	WALL SCONCE - INTERIOR		LED-35K		120		
WL3	12' L WALL MOUNT LINEAR DIRECT/INDIRECT	ORACLE LIGHTING OLS-WDI-LED-4-CR-12-D750L-U750L-1C-DIM10-120-35K-85-*	LED-35K	750LM/FT DN 750LM/FT UP	120	156	ARCHITECT TO SELECT COLOR
WL4	EXTERIOR WALL MOUNTED DIRECT/INDIRECT	MODERN FORMS MAGLEV #WS-W24110-40K-#	LED-40K	472	120	15.3	ARCHITECT TO SELECT FINISH
WL5	EXTERIOR WALL PACK		LED-40K		120		
WL6	EXTERIOR UPLIGHT FOR ROOF OVERHANG	EXO OUTDOOR LIGHTING SLING FLOOD SERIES #SGF1-40-120-K-*	LED-40K	4896	120	40	ARCHITECT TO SELECT COLOR
WL7	EXTERIOR WALL PACK - MECH. WELL ON ROOF WITH INTEGRAL PHOTOCELL	EXO OUTDOOR LIGHTING SLING SERIES #SG1-30-4K7-FT-120-*-PCU	LED-40K	3060	120	29	ARCHITECT TO SELECT COLOR
EX1	COMBINATION EMERGENCY EGRESS LIGHT AND EXIT SIGN	LITHONIA LIGHTING LHQM-LED-R-M6	LED		120	4.3	
EX2	EMERGENCY EGRESS LIGHT	LITHONIA LIGHTING ELM2L UVOLT LTP M12	LED		120	1.09	

EXTERIOR LIGHTING SCHEDULE

EXTERIOR AREA OF CONTROL	RELAY CONTROL DESIGNATION: Photocell Control	EMCS (DDC) System Control	Time Clock Controlled	Relay number	Sequence of Operation
Building Mounted Lights	Yes	No	Yes	r1	Photocell control 'On' at 1/2 hour before dusk & dawn; Time Clock off at 11:00 p.m.
Overhang/soffit Lights	Yes	No	Yes	r2	Photocell control 'On' at 1/2 hour before dusk & dawn; Time Clock off at 11:00 p.m.
Overhang Up lights	Yes	No	Yes	r3	Photocell control 'On' at 1/2 hour before dusk & dawn; Time Clock off at 11:00 p.m.
Bldg mounted Sign Lights	Yes	No	Yes	r4	Photocell control 'On' at 1/2 hour before dusk & dawn; Time Clock off at 11:00 p.m.
Receptacles at Exterior Eaves	Yes	No	Yes	r5	Photocell control 'On' at 1/2 hour before dusk & dawn; Time Clock off at 11:00 p.m.
Hallway/Stair/Tenant Restrooms	No	No	Yes	r6	1/2 hour after closing - verify operation with Owner
Restrooms Public	No	No	Yes	r7	1/2 hour after closing - verify operation with Owner

LIGHTING CONTROL SEQUENCE OF OPERATION

GENERAL REQUIREMENTS

1. PHOTOCELLS TO BE INSTALLED IN EDGE OF PRIMARY AND SECONDARY DAYLIGHT ZONES. TRIGGER 1 OF PHOTOCELL TO CONTROL LIGHTS IN PRIMARY DAYLIGHT ZONES, TRIGGER 2 OF PHOTOCELL TO CONTROL LIGHTS IN SECONDARY DAYLIGHT ZONES. DIMMING SHALL BE CONTINUOUS AND SHALL BE CONFIGURED TO COMPLETELY SHUT OFF ALL CONTROLLED LIGHTS WITH IN THE DAY LIGHTING ZONE.
2. PROGRAMMING SHALL BE PROVIDED FOR ADJUSTMENT OF LIGHTS ON SITE.
3. ALL LIGHTS WHERE INDICATED SHALL BE CONTROLLED VIA 0-10V DIMMING.

HALLWAY/RESTROOMS

1. LOW VOLTAGE SWITCH AT ENTRANCES
2. OCCUPANCY SENSOR TO DIM DOWN THE LIGHTS THE LIGHTS AFTER 20 MINUTES OF NO ACTIVITY.
3. PHOTOCELL FOR CONTROL OF LIGHTS WITHIN THE DAYLIGHT ZONES.

EXTERIOR

1. PROVIDE PHOTOCELL CONTROL OF EXTERIOR LIGHTING.
2. BUILDING FAÇADE LIGHTING SHALL AUTOMATICALLY SHUT-OFF AT 12:00 (MID-NIGHT) AND SHALL BE PROGRAMMED TO COME ON 1-HOUR BEFORE DUSK.

TIME CLOCK CONTROL FUNCTIONS

1. SHALL BE CAPABLE OF BEING PROGRAMMED NO FEWER THAN 7 DAYS.
2. SHALL BE CAPABLE OF (7) DIFFERENT DAY TYPES PER WEEK.
3. SHALL HAVE AUTOMATIC HOLIDAY SETBACK FEATURE.
4. SHALL HAVE PROGRAM BACKUP CAPABILITIES TO PREVENT THE LOSS OF PROGRAM AND TIME SETTINGS FOR A PERIOD OF AT LEAST 10 HOURS.

Commissioning Requirements for Lighting Control System, Controlled Receptacles and Metering

1. Lighting control systems and controlled receptacles shall be tested and verified per Washington State Energy Code Section C408.4.1.
2. Function performance testing shall demonstrate that the occupant sensors, time switches, manual overrides, night sweep-off, daylight responsive control, and controlled receptacles are installed and operate in accordance with approved construction documents. Testing shall include the sequence of operation and be conducted under the following conditions:

a. Normal operation
b. Redundant or automatic back-up mode
c. Performance of alarms and
d. Mode of operation upon a loss of power and restoration of power.
e. Where installed, emergency lighting inverters shall be tested for the full 90 minutes without normal power to prove compliance with the National Energy Code Article 700.
f. Where installed, emergency generator system and transfer switches shall be functionally tested to prove compliance with the National Energy Code 700.3 and 700.12.

3. Metering equipment, components, controls and configuration settings included in this project shall be included in the commissioning process. Function performance testing shall include function and maintenance serviceability. Testing shall include the sequence of operation and be conducted under the following conditions:

a. Metering system devices and components work properly under low and high load conditions.
b. Metering data is delivered in a format that is compatible with the building energy management system.
c. The energy display is in a location with access to building operation and management personnel.
d. The energy display graphically shows the current energy consumption rate for each whole building energy source, plus each end-use category, as well as the total and peak values for any day, week, month and year.

bcra
T 253.627.4367 F 253.627.4395 WWW.BCRADESIGN.COM
2106 PACIFIC AVENUE, SUITE 300, TACOMA, WA 98402

SEAL

MICHAEL L. COZART
STATE OF WASHINGTON
34306
REGISTERED
PROFESSIONAL ENGINEER

PROJECT
PORT OF EVERETT
WINE WALK BUILDING A12
XXXX SEINER DRIVE
EVERETT, WASHINGTON 98201

REVISIONS

DATE
12.13.2023

BCRA NO.
23045.00.00

DRAWN BY:

REVIEWED BY:

SHEET TITLE
BLDG A12 LIGHTING FIXTURE SCHEDULE

bcra

© COPYRIGHT 2023 - BCRA, INC. ALL RIGHTS RESERVED

SHEET

E-102

100% DESIGN DEVELOPMENT

22x34 6/9/2023 1:12:43 PM

IF SHEET MEASURES LESS THAN 22"X34", IT IS A REDUCED PRINT. REDUCE SCALE ACCORDINGLY

MECHANICAL EQUIPMENT CONNECTION SCHEDULE (EXHAUST FANS, AIR HANDLING UNITS, ETC)

EQUIP.	VOLT/PH	LOAD VA	LOAD MCA	LOAD HP	CIRCUIT PANEL	CIRCUIT BKR	CONDUIT/WIRE SIZE	MANUAL STARTER (NOTE 1)	MAGNETIC STARTER (NOTE 1)	FUSED DISC. (NOTE 1)	MIN. AIC. (AMPS)	DUCT DETECTOR (NOTE 2)	REMARKS
EF- 1	120/1				A12H								
EF- 2	120/1				A12H								
EF- 3	120/1				A12H								
EWH- 101	120/1				A12H				MFR	MFR			
EWH- 102	120/1				A12H				MFR	MFR			
EWH- 103	120/1				A12H				MFR	MFR			
EWH- 104	120/1				A12H				MFR	MFR			
EVAV- 101					A12H								
EVAV- 102					A12H								
EVAV- 103					A12H								
IU- 105	208/1								MFR	EC			
IU- 204	208/1								MFR	EC			
ICU- 1	208/1	208	1		ELEV	2,4	1/2"C., (3) #12 & (1) #12 GR		MFR	EC			
OCU- 1	208/1	2787	13.4		ELEV	2,4	1/2"C., (3) #12 & (1) #12 GR		MFR	EC			NOTE 3
DOAU- 1	208/3												
VAV	120/1	1800	15		A12H								CONTROL POWER FOR VAV UNITS
ETP- 1	120/1	6			A12H		1/2"C., (2) #12 & (1) #12 GR						
CP- 1	120/1	120	1		A12H		1/2"C., (2) #12 & (1) #12 GR			EC			
SP- 1	120/1				ELEV		1/2"C., (2) #12 & (1) #12 GR			EC			
TMV- 1	120/1	240	2		A12H		1/2"C., (2) #12 & (1) #12 GR						
HWT- 1	208/3												
VAV	120/1	1800	15		A12H								CONTROL POWER FOR VAV UNITS
Tenant Space A													
VAV- 101	208/1		15		A				MFR	EC			
EVAV- 104					A								
IU- 101	208/1		15		A				MFR	EC			
EVAV- 201					A								
VAV- 201					A								
IU- 201	208/1		15		A				MFR	EC			
Tenant Space B1													
VAV- 102					B1								
EVAV- 105					B2								
IU- 102	208/1		15		B3				MFR	EC			
Tenant Space B2													
VAV- 103					B2								
EVAV- 106					B3								
IU- 103	208/1		15		B4				MFR	EC			
Tenant Space C													
VAV- 104					C								
EVAV- 107					C								
IU- 104	208/1		15		C				MFR	EC			
Tenant Space D													
VAV- 202					D								
VAV- 203					D								
EVAV- 202					D								
IU- 202	208/1		15		D				MFR	EC			
IU- 203	208/1		15		D				MFR	EC			
OU- 1	208/3								MFR	EC			NOTE 3
OU- 2	208/3								MFR	EC			
OU- 3	208/3								MFR	EC			
OU- 4	208/3								MFR	EC			

NOTE: 1. CONTRACTOR LISTED SHALL FURNISH AND INSTALL THE LISTED DEVICE.
2. DUCT SMOKE DETECTORS SHALL BE FURNISHED AND WIRED BY THE ELECTRICAL CONTRACTOR AND INSTALLED BY THE MECHANICAL CONTRACTOR.
2. PROVIDE WEATHERPROOF CONNECTIONS AND DEVICES.

bcra
T 253.627.4367 F 253.627.4395 WWW.BCRADESIGN.COM
2106 PACIFIC AVENUE, SUITE 300, TACOMA, WA 98402

SEAL

PROJECT
PORT OF EVERETT
WINE WALK BUILDING A12
XXXX SEINER DRIVE
EVERETT, WASHINGTON 98201

REVISIONS

DATE
12.13.2023

BCRA NO.
23045.00.00

DRAWN BY:

REVIEWED BY:

SHEET TITLE
BLDG A12
MECHANICAL
EQUIPMENT
SCHEDULE

bcra

© COPYRIGHT 2023 - BCRA, INC. ALL RIGHTS RESERVED

SHEET

E-103

100% DESIGN DEVELOPMENT

22x34 6/9/2023 1:12:43 PM

IF SHEET MEASURES LESS THAN 22"X34", IT IS A REDUCED PRINT. REDUCE SCALE ACCORDINGLY

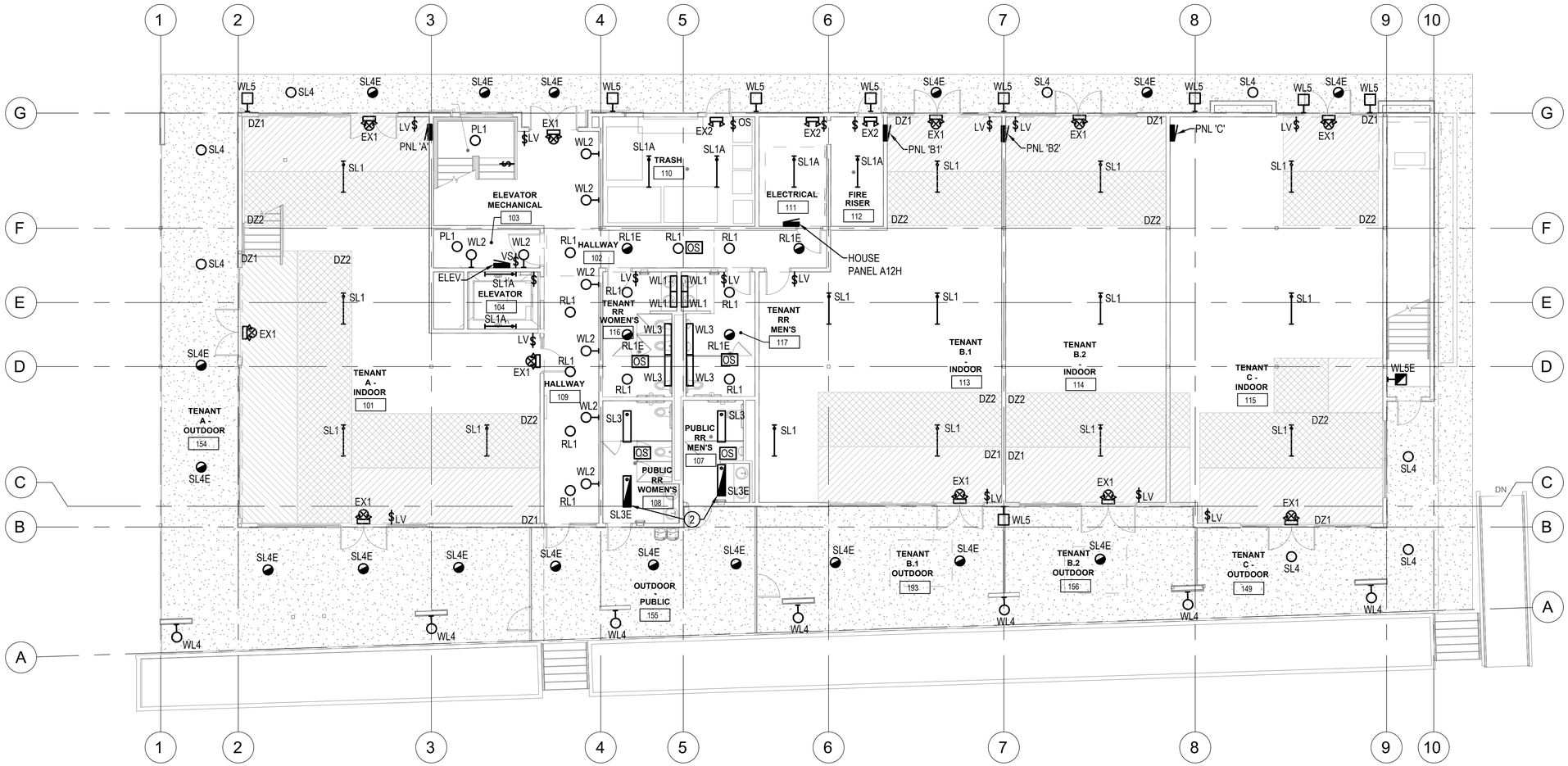

1 FIRST FLOOR LIGHTING PLAN

1/8" = 1'-0"

CONSTRUCTION NOTES

1. MOUNT LIGHT FIXTURE ON WALL OF THE ELEVATOR PIT.
2. LIGHTS TO OPERATE VIA TIME CLOCK.

GENERAL NOTES

1. SEE ARCHITECTURAL ELEVATIONS FOR MOUNTING HEIGHTS OF EXTERIOR LIGHT FIXTURES.

bcra
T 253.627.4367 F 253.627.4395 WWW.BCRADESIGN.COM
2106 PACIFIC AVENUE, SUITE 300, TACOMA, WA 98402

SEAL

MICHAEL L. COZADY
STATE OF WASHINGTON
34306
REGISTERED
PROFESSIONAL ENGINEER

PROJECT
PORT OF EVERETT
WINE WALK BUILDING A12
XXXX SEINER DRIVE
EVERETT, WASHINGTON 98201

REVISIONS

DATE
12.13.2023

BCRA NO.
23045.00.00

DRAWN BY:

REVIEWED BY:

SHEET TITLE
BLDG A12
FIRST FLOOR
LIGHTING PLAN

© COPYRIGHT 2023 - BCRA, INC. ALL RIGHTS RESERVED

SHEET
E-201

100% DESIGN DEVELOPMENT

IF SHEET MEASURES LESS THAN 22"X34", IT IS A REDUCED PRINT. REDUCE SCALE ACCORDINGLY

22x34 6/9/2023 1:12:43 PM

1 SECOND FLOOR LIGHTING PLAN

1/8" = 1'-0"

TRUE NORTH

0 4 8 16

SCALE: 1/8" = 1'-0"

CONSTRUCTION NOTES

1 --

GENERAL NOTES

1. SEE ARCHITECTURAL ELEVATIONS FOR MOUNTING HEIGHTS OF EXTERIOR LIGHT FIXTURES.

bcra
T 253.627.4367 F 253.627.4395 WWW.BCRADESIGN.COM
2106 PACIFIC AVENUE, SUITE 300, TACOMA, WA 98402

SEAL

MICHAEL L. COZART
STATE OF WASHINGTON
34306
REGISTERED
PROFESSIONAL ENGINEER

PROJECT
PORT OF EVERETT
WINE WALK BUILDING A12
XXXX SEINER DRIVE
EVERETT, WASHINGTON 98201

REVISIONS

DATE
12.13.2023

BCRA NO.
23045.00.00

DRAWN BY:

REVIEWED BY:

SHEET TITLE
BLDG A12
SECOND FLOOR
LIGHTING PLAN

bcra

© COPYRIGHT 2023 - BCRA, INC. ALL RIGHTS RESERVED

SHEET

E-202

100% DESIGN DEVELOPMENT

22x34 6/9/2023 1:12:43 PM

IF SHEET MEASURES LESS THAN 22"X34", IT IS A REDUCED PRINT. REDUCE SCALE ACCORDINGLY

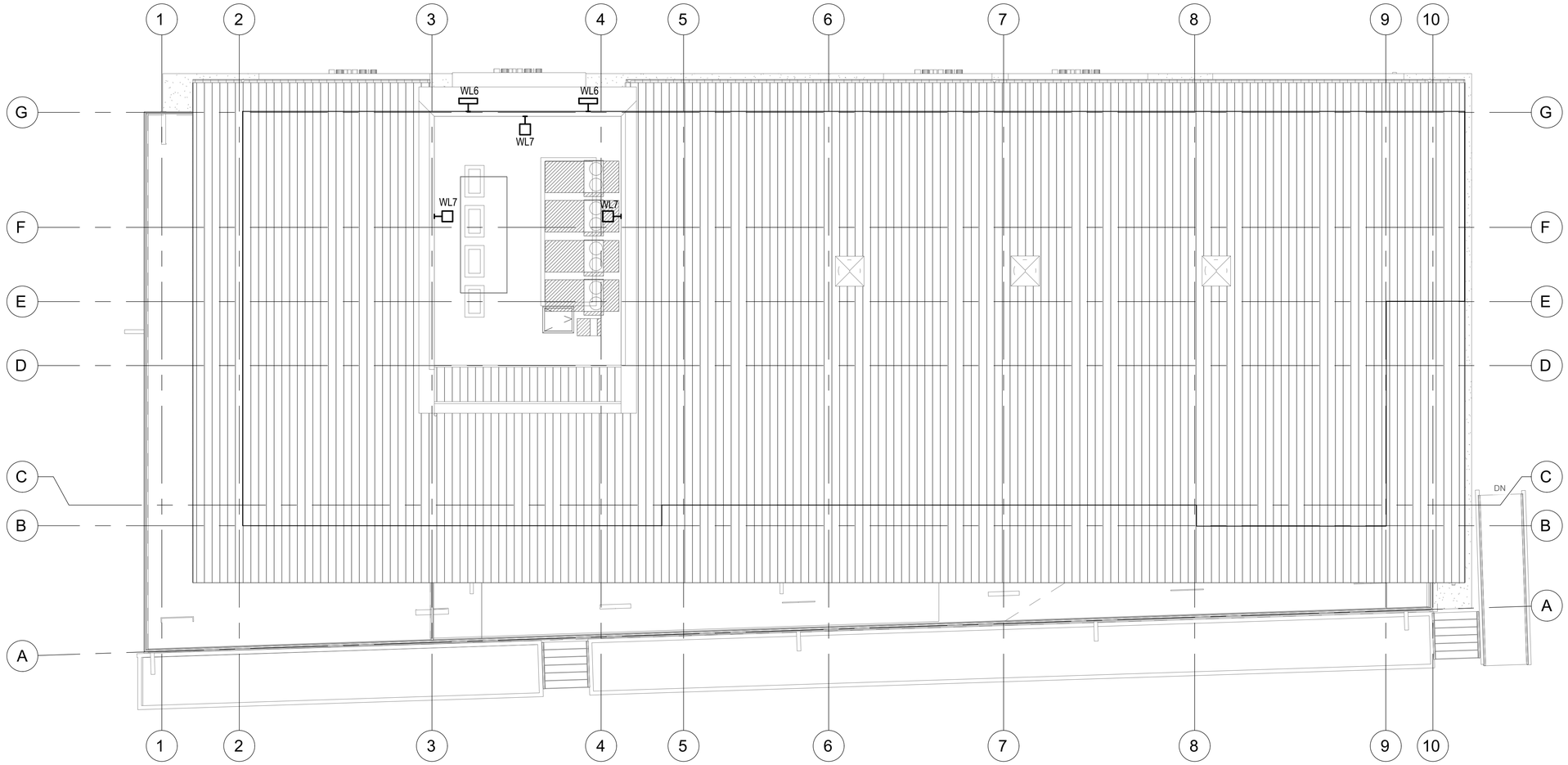

1 ROOF LIGHTING PLAN
1/8" = 1'-0"

TRUE NORTH

0 4 8 16
SCALE: 1/8" = 1'-0"

bcra
T 253.627.4367 F 253.627.4395 WWW.BCRADESIGN.COM
2106 PACIFIC AVENUE, SUITE 300, TACOMA, WA 98402

SEAL

MICHAEL L. COZART
STATE OF WASHINGTON
34306
REGISTERED
PROFESSIONAL ENGINEER

PROJECT
PORT OF EVERETT
WINE WALK BUILDING A12
XXXX SEINER DRIVE
EVERETT, WASHINGTON 98201

REVISIONS

DATE
12.13.2023

BCRA NO.
23045.00.00

DRAWN BY:

REVIEWED BY:

SHEET TITLE
BLDG A12
ROOF
LIGHTING PLAN

bcra
© COPYRIGHT 2023 - BCRA, INC. ALL RIGHTS RESERVED

SHEET
E-203

100% DESIGN DEVELOPMENT

22x34 6/9/2023 1:12:43 PM

IF SHEET MEASURES LESS THAN 22"X34", IT IS A REDUCED PRINT. REDUCE SCALE ACCORDINGLY

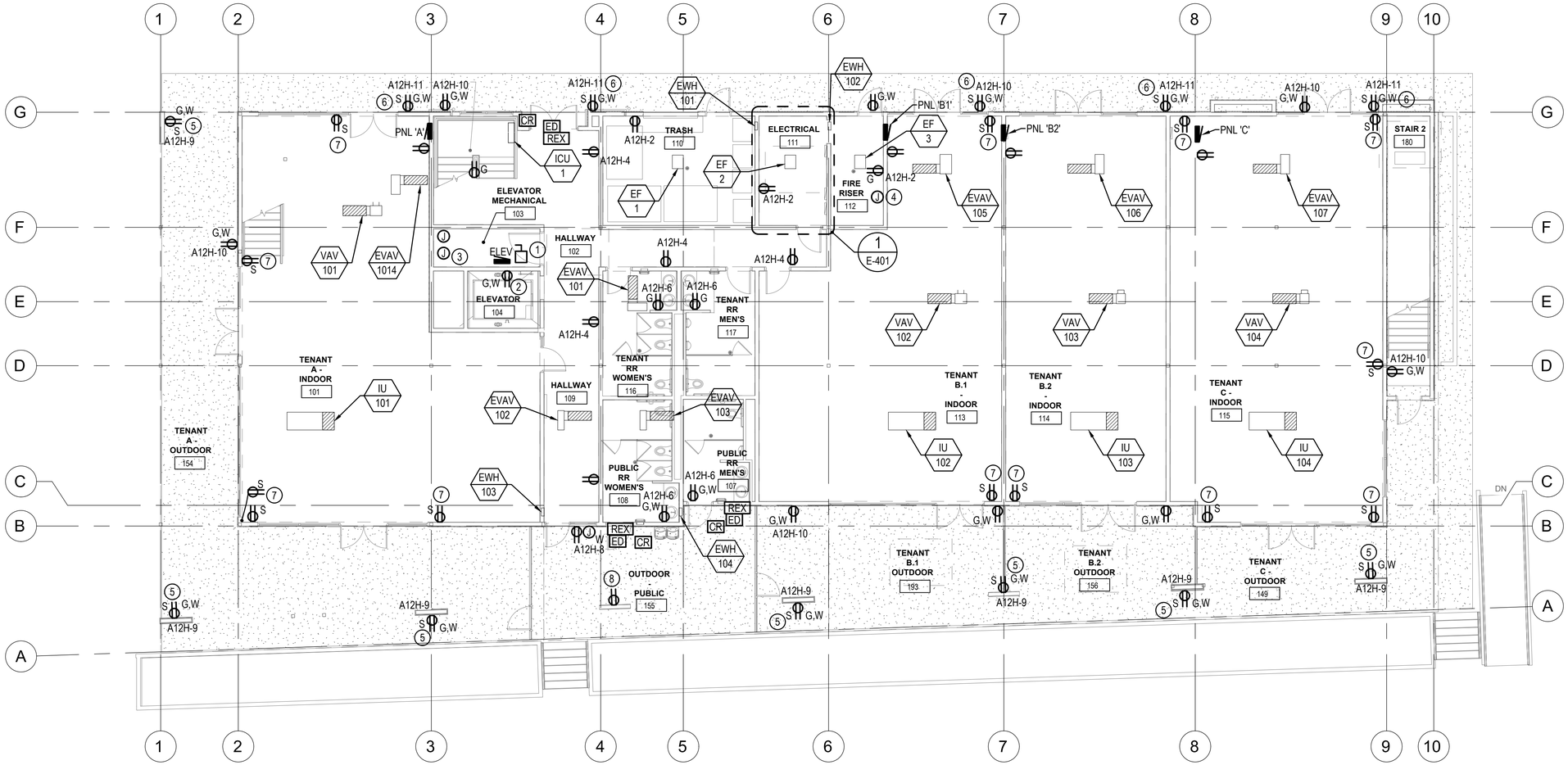

CONSTRUCTION NOTES

1. ELEVATOR SHUNT TRIP DISCONNECT SWITCH.
2. MOUNT IN ELEVATOR PIT.
3. PROVIDE CONNECTION TO ELEVATOR CAR LIGHTS.
4. PROVIDE CONNECTION TO THE DRY-SPRINKLER COMPRESSOR; 120V, 1/2 HP.
5. MOUNT AT UNDERSIDE OF SECOND FLOOR WALKWAY. ROUTE CIRCUIT THROUGH TIME CLOCK FOR CONTROL.
6. MOUNT AT UNDERSIDE OF CANOPY FOR HOLIDAY LIGHTS. ROUTE CIRCUIT THROUGH TIME CLOCK FOR CONTROL.
7. MOUNT AT TOP OF WINDOW FOR SIGN LIGHTING. ROUTE CIRCUIT THROUGH TIME CLOCK FOR CONTROL.
8. POWER FOR FIRE PIT.

1 FIRST FLOOR POWER & SYSTEMS PLAN

1/8" = 1'-0"

TRUE NORTH

0 4 8 16

SCALE: 1/8" = 1'-0"

22x34 6/9/2023 1:12:43 PM

IF SHEET MEASURES LESS THAN 22"X34", IT IS A REDUCED PRINT. REDUCE SCALE ACCORDINGLY

bcra
T 253.627.4367 F 253.627.4395 WWW.BCRADESIGN.COM
2106 PACIFIC AVENUE, SUITE 300, TACOMA, WA 98402

SEAL

MICHAEL L. COZART
STATE OF WASHINGTON
34306
REGISTERED
PROFESSIONAL ENGINEER

PROJECT
PORT OF EVERETT
WINE WALK BUILDING A12
XXXX SEINER DRIVE
EVERETT, WASHINGTON 98201

REVISIONS

DATE
12.13.2023

BCRA NO.
23045.00.00

DRAWN BY:

REVIEWED BY:

SHEET TITLE
BLDG A12
FIRST FLOOR POWER
& SYSTEMS PLAN

bcra

© COPYRIGHT 2023 - BCRA, INC. ALL RIGHTS RESERVED

SHEET

E-301

100% DESIGN DEVELOPMENT

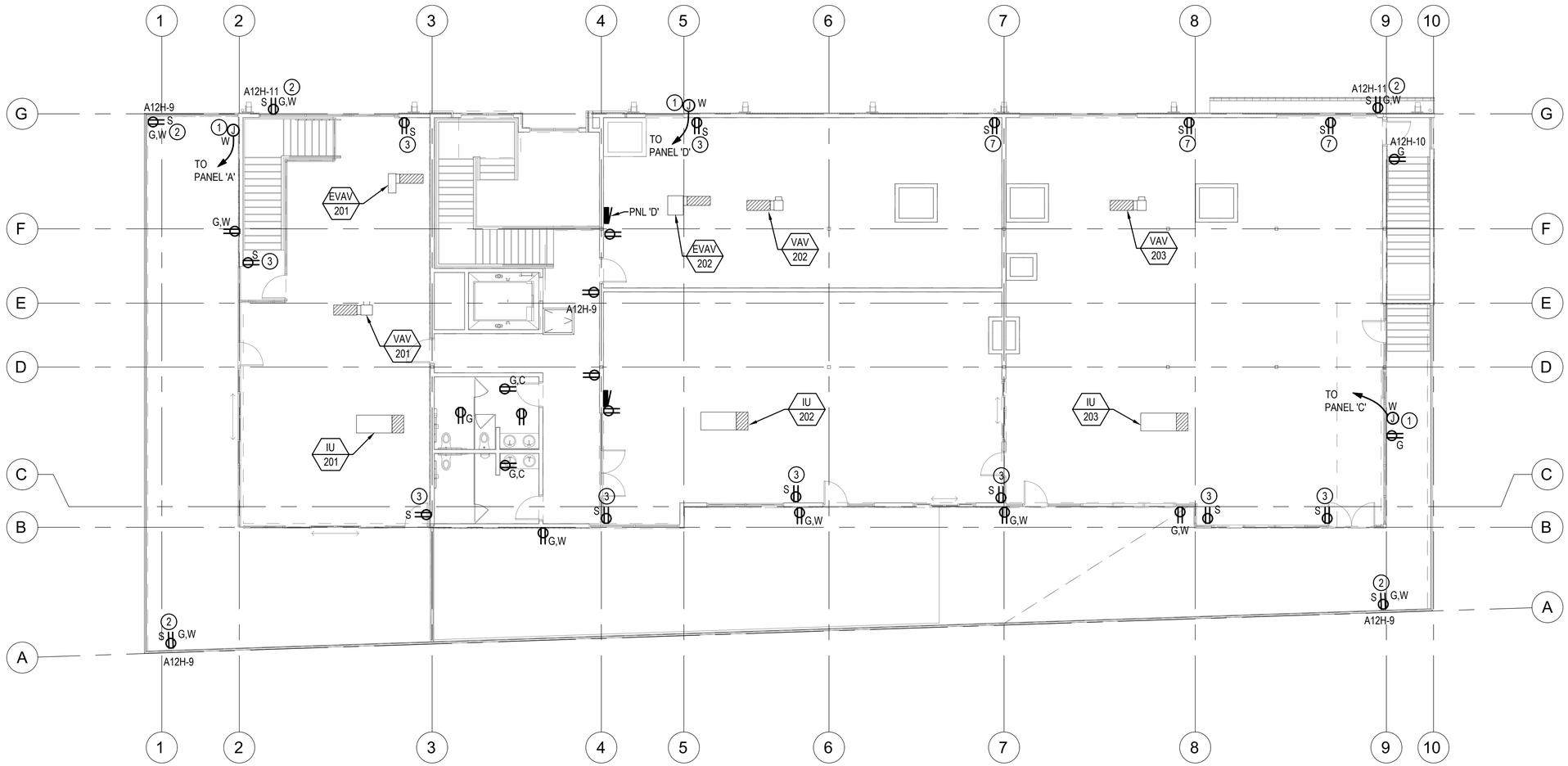

1 SECOND FLOOR POWER & SYSTEMS PLAN

1/8" = 1'-0"

TRUE NORTH

0 4 8 16

SCALE: 1/8" = 1'-0"

CONSTRUCTION NOTES

1. PROVIDE POWER ROUGH-IN FOR BUILDING TENANT SIGNAGE.
2. MOUNT AT UNDERSIDE OF CANOPY FOR HOLIDAY LIGHTS. ROUTE CIRCUIT THROUGH TIME CLOCK FOR CONTROL.
3. MOUNT AT TOP OF WINDOW FOR SIGN LIGHTING. ROUTE CIRCUIT THROUGH TIME CLOCK FOR CONTROL.

bcra
T 253.627.4367 F 253.627.4395 WWW.BCRADESIGN.COM
2106 PACIFIC AVENUE, SUITE 300, TACOMA, WA 98402

SEAL

MICHAEL L. COZART
STATE OF WASHINGTON
34306
REGISTERED
PROFESSIONAL ENGINEER

PROJECT
PORT OF EVERETT
WINE WALK BUILDING A12
XXXX SEINER DRIVE
EVERETT, WASHINGTON 98201

REVISIONS

DATE
12.13.2023

BCRA NO:
23045.00.00

DRAWN BY:

REVIEWED BY:

SHEET TITLE
BLDG A12
SECOND FLOOR
POWER & SYSTEMS
PLAN

bcra

© COPYRIGHT 2023 - BCRA, INC. ALL RIGHTS RESERVED

SHEET

E-302

100% DESIGN DEVELOPMENT

22x34 6/9/2023 1:12:43 PM

IF SHEET MEASURES LESS THAN 22"X34", IT IS A REDUCED PRINT. REDUCE SCALE ACCORDINGLY

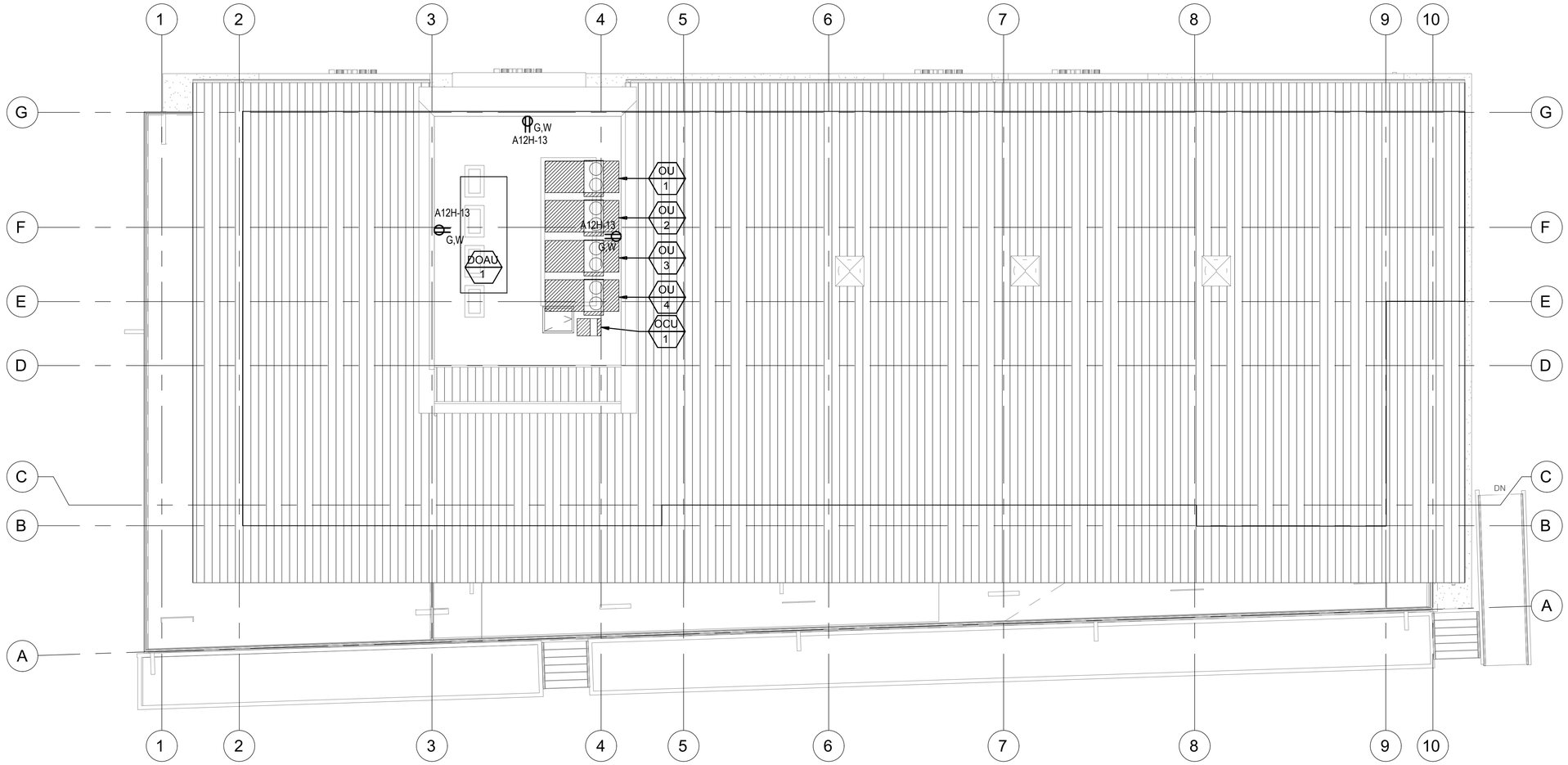

1 ROOF POWER & SYSTEMS PLAN

1/8" = 1'-0"

TRUE NORTH

0 4 8 16

SCALE: 1/8" = 1'-0"

bcra
T 253.627.4367 F 253.627.4395 WWW.BCRADESIGN.COM
2106 PACIFIC AVENUE, SUITE 300, TACOMA, WA 98402

SEAL

MICHAEL L. COZART
STATE OF WASHINGTON
34306
REGISTERED
PROFESSIONAL ENGINEER

PROJECT
PORT OF EVERETT
WINE WALK BUILDING A12
XXXX SEINER DRIVE
EVERETT, WASHINGTON 98201

REVISIONS

DATE
12.13.2023

BCRA NO.
23045.00.00

DRAWN BY:

REVIEWED BY:

SHEET TITLE
BLDG A12
ROOF POWER &
SYSTEMS PLAN

bcra

© COPYRIGHT 2023 - BCRA, INC. ALL RIGHTS RESERVED

SHEET

E-303

100% DESIGN DEVELOPMENT

22x34 6/9/2023 1:12:43 PM

IF SHEET MEASURES LESS THAN 22"X34", IT IS A REDUCED PRINT. REDUCE SCALE ACCORDINGLY

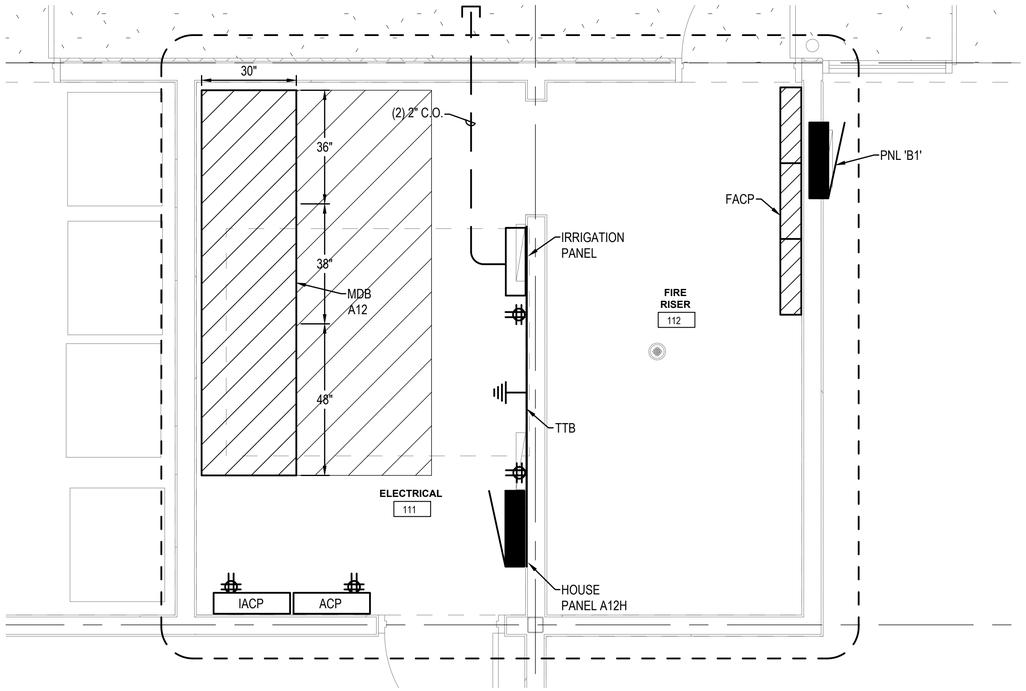

1 ENLARGED ELECTRICAL ROOM PLAN
1/2" = 1'-0"

TRUE NORTH

2' 1' 0 2' 4'
SCALE: 1/2" = 1'-0"

bcra
T 253.627.4367 F 253.627.4395 WWW.BCRADESIGN.COM
2106 PACIFIC AVENUE, SUITE 300, TACOMA, WA 98402

SEAL

MICHAEL L. COZART
STATE OF WASHINGTON
34306
REGISTERED
PROFESSIONAL ENGINEER

PROJECT
PORT OF EVERETT
WINE WALK BUILDING A12
XXXX SEINER DRIVE
EVERETT, WASHINGTON 98201

REVISIONS

DATE
12.13.2023

BCRA NO.
23045.00.00

DRAWN BY:

REVIEWED BY:

SHEET TITLE
BLDG A12
ENLARGED
ELECTRICAL ROOM
PLAN

bcra

© COPYRIGHT 2023 - BCRA, INC. ALL RIGHTS RESERVED

SHEET
E-401

100% DESIGN DEVELOPMENT

22x34 6/9/2023 1:12:43 PM

IF SHEET MEASURES LESS THAN 22"X34", IT IS A REDUCED PRINT. REDUCE SCALE ACCORDINGLY

THREE PHASE FEEDER SCHEDULE											
		Copper					Aluminum				
ID	Ampacity	# Each	Conduit	#	AWG	GND	# Each	Conduit	#	AWG	GND
30	30A	1	3/4"	4	#10	#10	X	X	X	X	X
60	60A	1	1 1/4"	4	#6	#10	X	X	X	X	X
200	200A	1	2"	4	#3/0	#6	1	2 1/2"	4	#250	#4
400	400A	1	4"	4	#600	#3	2	2 1/2"	4	#250	#1
1200	1200A	3	4"	4	#600	#3/0	4	4"	4	#500	#250

NOTE: The above table is based on fill for Rigid Steel Conduit. Other types of conduits may result in size adjustments.

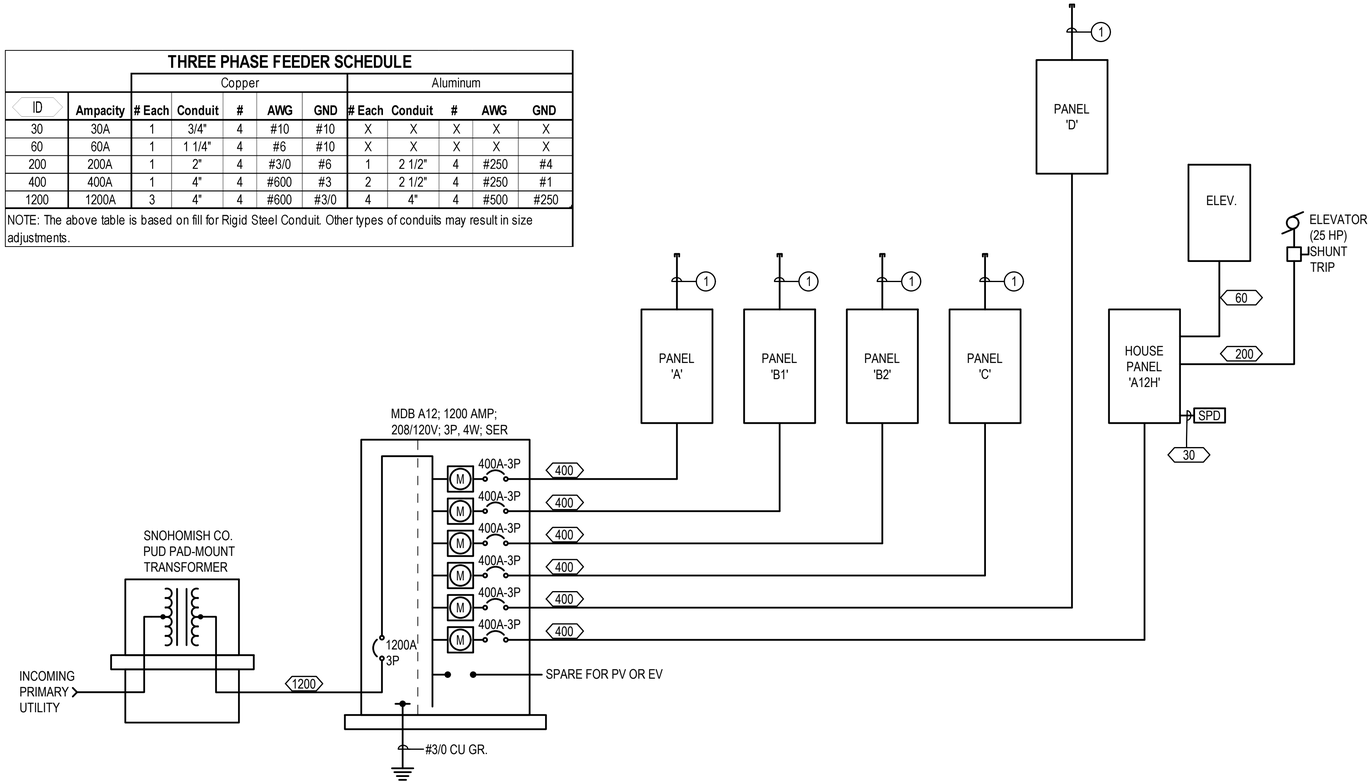

1 POWER ONE-LINE DIAGRAM

SCALE: NTS

bcra

T 253.627.4367 F 253.627.4395 WWW.BCRADESIGN.COM
2106 PACIFIC AVENUE, SUITE 300, TACOMA, WA 98402

SEAL

MICHAEL L. COZART
STATE OF WASHINGTON
34306
REGISTERED
PROFESSIONAL ENGINEER

PROJECT
PORT OF EVERETT
WINE WALK BUILDING A12
XXXX SEINER DRIVE
EVERETT, WASHINGTON 98201

REVISIONS

DATE
12.13.2023

BCRA NO.
23045.00.00

DRAWN BY:

REVIEWED BY:

SHEET TITLE
BLDG A12
ONE-LINE
DIAGRAM

bcra

© COPYRIGHT 2023 - BCRA, INC. ALL RIGHTS RESERVED

SHEET

E-501

100% DESIGN DEVELOPMENT

22x34 6/9/2023 1:12:43 PM

IF SHEET MEASURES LESS THAN 22"X34", IT IS A REDUCED PRINT. REDUCE SCALE ACCORDINGLY

PANEL: MDB A12 | 3 PH | 4 WIRE | VOLTAGE: 208Y/120V | 1200A MCB
LOC: MAIN ELECTRICAL ROOM | MOUNT: SURFACE | FEED: BOTTOM
TYPE: NEMA 1; SUSE; TENANT METERED | POLES: 42 | SF MAINS: NO | 42,000AIC MINIMUM

LOAD TYPE	LOAD	CIRCUIT DIRECTORY	CIR. NO.	CIR. BRKR P	CIR. BRKR AMP	A	B	C	CIR. BRKR P	CIR. BRKR AMP	CIR. NO.	CIRCUIT DIRECTORY	LOAD	LOAD TYPE
			1						3		2			
			3								4	TENANT A		
			5							400	6			
			7						3		8			
			9								10	TENANT B1		
			11							400	12			
			13						3		14			
			15								16	TENANT B2		
			17							400	18			
			19						3		20			
			21								22	TENANT C		
			23							400	24			
			25						3		26			
			27								28	TENANT D		
			29							400	30			
			31			3858			3		32		3858	SF
			33				5614				34	HOUSE PANEL 'A12H'	5614	SF
			35					2000		400	36		2000	SF
			37								38			
			39								40			
			41								42			
		TOTAL			THIS PANEL->	3858	5614	2000					TOTAL 11472	

LIGHTING (125%) = 250.00
RECEPTS<=10000 (100%) = 6480.00
RECEPTS>10000 (50%) = 0.00
RECEPTS TOTAL = 6480.00
ELECTRIC HEAT (100%) = 0.00
LARGEST MOTOR (125%) = 0.00
OTHER MOTORS (100%) = 3692.00
MOTOR TOTAL = 3692.00
WATER HEATERS (100%) = 0.00
KITCHEN LOADS (65%) = 0.00
APPLIANCES (100%) = 0.00
DEDICATED (100%) = 1100.00
MISC (100%) = 0.00

TOTAL CONNECTED LOAD (VA): 11,472.00
TOTAL CONNECTED CURRENT (A): 31.84
TOTAL DEMAND LOAD (VA): 11,522.00
TOTAL DEMAND CURRENT (A) 31.98

NOTES: L=LIGHTING, R=RECEPTACLES, H=ELECTRIC HEAT, ML=LARGEST MOTOR, MO=OTHER MOTORS, WH=WATER HEATERS, K=KITCHEN LOADS, A=APPLIANCES, D=DEDICATED, X=MISC, SF=SUB FEED

PANEL: A | 3 PH | 4 WIRE | VOLTAGE: 208Y/120V | 400A MLO
LOC: TENANT A | MOUNT: FLUSH | FEED: BOTTOM
TYPE: NEMA 1 | POLES: 42 | SF MAINS: NO | 65,000AIC MINIMUM

LOAD TYPE	LOAD	CIRCUIT DIRECTORY	CIR. NO.	CIR. BRKR P	CIR. BRKR AMP	A	B	C	CIR. BRKR P	CIR. BRKR AMP	CIR. NO.	CIRCUIT DIRECTORY	LOAD	LOAD TYPE
			1								2			
			3								4			
			5								6			
			7								8			
			9								10			
			11								12			
			13								14			
			15								16			
			17								18			
			19								20			
			21								22			
			23								24			
			25								26			
			27								28			
			29								30			
			31								32			
			33								34			
			35								36			
			37								38			
			39								40			
			41								42			
		TOTAL			THIS PANEL->								TOTAL	

LIGHTING (125%) = 0.00
RECEPTS<=10000 (100%) = 0.00
RECEPTS>10000 (50%) = 0.00
RECEPTS TOTAL = 0.00
ELECTRIC HEAT (100%) = 0.00
LARGEST MOTOR (125%) = 0.00
OTHER MOTORS (100%) = 0.00
MOTOR TOTAL = 0.00
WATER HEATERS (100%) = 0.00
KITCHEN LOADS (65%) = 0.00
APPLIANCES (100%) = 0.00
DEDICATED (100%) = 0.00
MISC (100%) = 0.00

TOTAL CONNECTED LOAD (VA):
TOTAL CONNECTED CURRENT (A):
TOTAL DEMAND LOAD (VA):
TOTAL DEMAND CURRENT (A)

NOTES: L=LIGHTING, R=RECEPTACLES, H=ELECTRIC HEAT, ML=LARGEST MOTOR, MO=OTHER MOTORS, WH=WATER HEATERS, K=KITCHEN LOADS, A=APPLIANCES, D=DEDICATED, X=MISC, SF=SUB FEED

PANEL: B1 | 3 PH | 4 WIRE | VOLTAGE: 208Y/120V | 400A MLO
LOC: TENANT B.1 | MOUNT: FLUSH | FEED: BOTTOM
TYPE: NEMA 1 | POLES: 42 | SF MAINS: NO | 65,000AIC MINIMUM

LOAD TYPE	LOAD	CIRCUIT DIRECTORY	CIR. NO.	CIR. BRKR P	CIR. BRKR AMP	A	B	C	CIR. BRKR P	CIR. BRKR AMP	CIR. NO.	CIRCUIT DIRECTORY	LOAD	LOAD TYPE
			1								2			
			3								4			
			5								6			
			7								8			
			9								10			
			11								12			
			13								14			
			15								16			
			17								18			
			19								20			
			21								22			
			23								24			
			25								26			
			27								28			
			29								30			
			31								32			
			33								34			
			35								36			
			37								38			
			39								40			
			41								42			
		TOTAL			THIS PANEL->								TOTAL	

LIGHTING (125%) = 0.00
RECEPTS<=10000 (100%) = 0.00
RECEPTS>10000 (50%) = 0.00
RECEPTS TOTAL = 0.00
ELECTRIC HEAT (100%) = 0.00
LARGEST MOTOR (125%) = 0.00
OTHER MOTORS (100%) = 0.00
MOTOR TOTAL = 0.00
WATER HEATERS (100%) = 0.00
KITCHEN LOADS (65%) = 0.00
APPLIANCES (100%) = 0.00
DEDICATED (100%) = 0.00
MISC (100%) = 0.00

TOTAL CONNECTED LOAD (VA):
TOTAL CONNECTED CURRENT (A):
TOTAL DEMAND LOAD (VA):
TOTAL DEMAND CURRENT (A)

NOTES: L=LIGHTING, R=RECEPTACLES, H=ELECTRIC HEAT, ML=LARGEST MOTOR, MO=OTHER MOTORS, WH=WATER HEATERS, K=KITCHEN LOADS, A=APPLIANCES, D=DEDICATED, X=MISC, SF=SUB FEED

PANEL: B2 | 3 PH | 4 WIRE | VOLTAGE: 208Y/120V | 400A MLO
LOC: TENANT B.2 | MOUNT: FLUSH | FEED: BOTTOM
TYPE: NEMA 1 | POLES: 42 | SF MAINS: NO | 65,000AIC MINIMUM

LOAD TYPE	LOAD	CIRCUIT DIRECTORY	CIR. NO.	CIR. BRKR P	CIR. BRKR AMP	A	B	C	CIR. BRKR P	CIR. BRKR AMP	CIR. NO.	CIRCUIT DIRECTORY	LOAD	LOAD TYPE
			1								2			
			3								4			
			5								6			
			7								8			
			9								10			
			11								12			
			13								14			
			15								16			
			17								18			
			19								20			
			21								22			
			23								24			
			25								26			
			27								28			
			29								30			
			31								32			
			33								34			
			35								36			
			37								38			
			39								40			
			41								42			
		TOTAL			THIS PANEL->								TOTAL	

LIGHTING (125%) = 0.00
RECEPTS<=10000 (100%) = 0.00
RECEPTS>10000 (50%) = 0.00
RECEPTS TOTAL = 0.00
ELECTRIC HEAT (100%) = 0.00
LARGEST MOTOR (125%) = 0.00
OTHER MOTORS (100%) = 0.00
MOTOR TOTAL = 0.00
WATER HEATERS (100%) = 0.00
KITCHEN LOADS (65%) = 0.00
APPLIANCES (100%) = 0.00
DEDICATED (100%) = 0.00
MISC (100%) = 0.00

TOTAL CONNECTED LOAD (VA):
TOTAL CONNECTED CURRENT (A):
TOTAL DEMAND LOAD (VA):
TOTAL DEMAND CURRENT (A)

NOTES: L=LIGHTING, R=RECEPTACLES, H=ELECTRIC HEAT, ML=LARGEST MOTOR, MO=OTHER MOTORS, WH=WATER HEATERS, K=KITCHEN LOADS, A=APPLIANCES, D=DEDICATED, X=MISC, SF=SUB FEED

bcra
T 253.627.4367 F 253.627.4395 WWW.BCRADESIGN.COM
2106 PACIFIC AVENUE, SUITE 300, TACOMA, WA 98402

SEAL

MICHAEL L. COZART — STATE OF WASHINGTON — 34306 — REGISTERED PROFESSIONAL ENGINEER

PROJECT
PORT OF EVERETT
WINE WALK BUILDING A12
XXXX SEINER DRIVE
EVERETT, WASHINGTON 98201

REVISIONS

DATE
12.13.2023

BCRA NO.
23045.00.00

DRAWN BY:

REVIEWED BY:

SHEET TITLE
BLDG A12
PANEL
SCHEDULES

bcra

© COPYRIGHT 2023 - BCRA, INC. ALL RIGHTS RESERVED

SHEET

E-601

100% DESIGN DEVELOPMENT

22x34 6/9/2023 1:12:43 PM

IF SHEET MEASURES LESS THAN 22"X34", IT IS A REDUCED PRINT. REDUCE SCALE ACCORDINGLY

PANEL: C | **3 PH** | **4 WIRE** | **VOLTAGE: 208Y/120V** | **400A MLO**
LOC: TENANT C | **MOUNT: FLUSH** | **FEED: BOTTOM**
TYPE: NEMA 1 | **POLES: 42** | **SF MAINS: NO** | **65,000AIC MINIMUM**

LOAD TYPE	LOAD	CIRCUIT DIRECTORY	CIR. NO.	CIR. BRKR P	CIR. BRKR AMP	A	B	C	CIR. BRKR P	CIR. BRKR AMP	CIR. NO.	CIRCUIT DIRECTORY	LOAD	LOAD TYPE
			1								2			
			3								4			
			5								6			
			7								8			
			9								10			
			11								12			
			13								14			
			15								16			
			17								18			
			19								20			
			21								22			
			23								24			
			25								26			
			27								28			
			29								30			
			31								32			
			33								34			
			35								36			
			37								38			
			39								40			
			41								42			
		TOTAL			**THIS PANEL->**								**TOTAL**	

LIGHTING(125%) = 0.00
RECEPTS<=10000(100%) = 0.00
RECEPTS>10000(50%) = 0.00
RECEPTS TOTAL = 0.00
ELECTRIC HEAT(100%) = 0.00
LARGEST MOTOR(125%) = 0.00
OTHER MOTORS(100%) = 0.00
MOTOR TOTAL = 0.00
WATER HEATERS(100%) = 0.00
KITCHEN LOADS(65%) = 0.00
APPLIANCES(100%) = 0.00
DEDICATED(100%) = 0.00
MISC(100%) = 0.00

TOTAL CONNECTED LOAD (VA):
TOTAL CONNECTED CURRENT (A):
TOTAL DEMAND LOAD (VA):
TOTAL DEMAND CURRENT (A)

NOTES: L=LIGHTING, R=RECEPTACLES, H=ELECTRIC HEAT, ML=LARGEST MOTOR, MO=OTHER MOTORS, WH=WATER HEATERS, K=KITCHEN LOADS, A=APPLIANCES,
D=DEDICATED, X=MISC, SF=SUB-FEED

PANEL: D | **3 PH** | **4 WIRE** | **VOLTAGE: 208Y/120V** | **400A MLO**
LOC: TENANT C | **MOUNT: FLUSH** | **FEED: BOTTOM**
TYPE: NEMA 1 | **POLES: 42** | **SF MAINS: NO** | **65,000AIC MINIMUM**

LOAD TYPE	LOAD	CIRCUIT DIRECTORY	CIR. NO.	CIR. BRKR P	CIR. BRKR AMP	A	B	C	CIR. BRKR P	CIR. BRKR AMP	CIR. NO.	CIRCUIT DIRECTORY	LOAD	LOAD TYPE
			1								2			
			3								4			
			5								6			
			7								8			
			9								10			
			11								12			
			13								14			
			15								16			
			17								18			
			19								20			
			21								22			
			23								24			
			25								26			
			27								28			
			29								30			
			31								32			
			33								34			
			35								36			
			37								38			
			39								40			
			41								42			
		TOTAL			**THIS PANEL->**								**TOTAL**	

LIGHTING(125%) = 0.00
RECEPTS<=10000(100%) = 0.00
RECEPTS>10000(50%) = 0.00
RECEPTS TOTAL = 0.00
ELECTRIC HEAT(100%) = 0.00
LARGEST MOTOR(125%) = 0.00
OTHER MOTORS(100%) = 0.00
MOTOR TOTAL = 0.00
WATER HEATERS(100%) = 0.00
KITCHEN LOADS(65%) = 0.00
APPLIANCES(100%) = 0.00
DEDICATED(100%) = 0.00
MISC(100%) = 0.00

TOTAL CONNECTED LOAD (VA):
TOTAL CONNECTED CURRENT (A):
TOTAL DEMAND LOAD (VA):
TOTAL DEMAND CURRENT (A)

NOTES: L=LIGHTING, R=RECEPTACLES, H=ELECTRIC HEAT, ML=LARGEST MOTOR, MO=OTHER MOTORS, WH=WATER HEATERS, K=KITCHEN LOADS, A=APPLIANCES,
D=DEDICATED, X=MISC, SF=SUB-FEED

PANEL: A12H | **3 PH** | **4 WIRE** | **VOLTAGE: 208Y/120V** | **400A MLO**
LOC: HOUSE PANEL - ELECT RM | **MOUNT: FLUSH** | **FEED: BOTTOM**
TYPE: NEMA 1 | **POLES: 42** | **SF MAINS: NO** | **65,000AIC MINIMUM**

LOAD TYPE	LOAD	CIRCUIT DIRECTORY	CIR. NO.	CIR. BRKR P	CIR. BRKR AMP	A	B	C	CIR. BRKR P	CIR. BRKR AMP	CIR. NO.	CIRCUIT DIRECTORY	LOAD	LOAD TYPE
		LOBBY/CORR LIGHTS	1	1	20	540			1	20	2	RECEPT TRASH/ELECT/FIRE RISER	540	R
		RESTROOMS/STOR LIGHTS	3	1	20		900		1	20	4	RECEPT - LOBBY/HALLWALLS	900	R
		EXTERIOR BLDG LTS	5	1	20			720	1	20	6	RECEPT - RESTROOMS	720	R
		EXT CANOPY LIGHTS	7	1	20	1000			1	20G	8	DRINKING FOUNTAIN (NOTE 1)	1000	D
R	1080	EXT RECEPTS AT ROOF EAVES	9	1	20		2340		1	20	10	RECEPT - EXT BLDG	1260	R
R	1080	EXT RECEPTS AT ROOF EAVES	11	1	20			1080			12			
R	540	RECEPT - ROOF	13	1	20	540					14			
			15								16			
			17								18			
			19								20			
			21								22			
			23								24			
			25								26			
			27								28			
			29								30			
			31			1778			3		32		1778	SF
			33				2374				34	PANEL ELEV	2374	SF
			35					200		60	36		200	SF
			37						3		38			
			39								40	ELEVATOR		
			41							100	42			
	2700	**TOTAL**			**THIS PANEL->**	3858	5614	2000					**TOTAL** 8772	

LIGHTING(125%) = 2500.00
RECEPTS<=10000(100%) = 6480.00
RECEPTS>10000(50%) = 0.00
RECEPTS TOTAL = 6480.00
ELECTRIC HEAT(100%) = 0.00
3858 5614 2000
LARGEST MOTOR(125%) = 0.00
OTHER MOTORS(100%) = 3692.00
MOTOR TOTAL = 3692.00
WATER HEATERS(100%) = 0.00
KITCHEN LOADS(65%) = 0.00
APPLIANCES(100%) = 0.00
DEDICATED(100%) = 100.00
MISC(100%) = 0.00

TOTAL CONNECTED LOAD (VA): 11,472.00
TOTAL CONNECTED CURRENT (A): 31.84
TOTAL DEMAND LOAD (VA): 11,522.00
TOTAL DEMAND CURRENT (A) 31.98

NOTES: L=LIGHTING, R=RECEPTACLES, H=ELECTRIC HEAT, ML=LARGEST MOTOR, MO=OTHER MOTORS, WH=WATER HEATERS, K=KITCHEN LOADS, A=APPLIANCES
D=DEDICATED, X=MISC, SF=SUB-FEED

NOTE 1: PROVIDE GFCI CIRCUIT BREAKER

PANEL: ELEV | **3 PH** | **4 WIRE** | **VOLTAGE: 208Y/120V** | **60A MLO**
LOC: ELEVATOR RM | **MOUNT: SURFACE** | **FEED: BOTTOM**
TYPE: NEMA 1 | **POLES: 12** | **SF MAINS: NO** | **22,000AIC MINIMUM**

LOAD TYPE	LOAD	CIRCUIT DIRECTORY	CIR. NO.	CIR. BRKR P	CIR. BRKR AMP	A	B	C	CIR. BRKR P	CIR. BRKR AMP	CIR. NO.	CIRCUIT DIRECTORY	LOAD	LOAD TYPE
		ELEVATOR RM LIGHTS	1	1	20	1498			2		2	ICU-1/OCU-1	1498	MO
R	180	ELEV RM RECEPT	3	1	20		1678			20	4		1498	MO
		ELEVATOR PIT LIGHTS	5	1	20			200	1	20	6	ELEVATOR CAB LIGHTS	200	L
R	180	ELEV PIT RECEPT	7	1	20	280			1	20	8	SHUNT TRIP	100	D
MO	696	SUMP PUMP	9	1	20		696				10	SPACE		
		SPACE	11								12	SPACE		
	1056	**TOTAL**			**THIS PANEL->**	1778	2374	200					**TOTAL** 3296	

LIGHTING(125%) = 250.00
RECEPTS<=10000(100%) = 360.00
RECEPTS>10000(50%) = 0.00
RECEPTS TOTAL = 360.00
ELECTRIC HEAT(100%) = 0.00
1778 2374 200
LARGEST MOTOR(125%) = 0.00
OTHER MOTORS(100%) = 3692.00
MOTOR TOTAL = 3692.00
WATER HEATERS(100%) = 0.00
KITCHEN LOADS(65%) = 0.00
APPLIANCES(100%) = 0.00
DEDICATED(100%) = 100.00
MISC(100%) = 0.00

TOTAL CONNECTED LOAD (VA): 4,352.00
TOTAL CONNECTED CURRENT (A): 12.08
TOTAL DEMAND LOAD (VA): 4,402.00
TOTAL DEMAND CURRENT (A) 12.22

NOTES: L=LIGHTING, R=RECEPTACLES, H=ELECTRIC HEAT, ML=LARGEST MOTOR, MO=OTHER MOTORS, WH=WATER HEATERS, K=KITCHEN LOADS, A=APPLIANCES,
D=DEDICATED, X=MISC, SF=SUB-FEED

NOTE 1: PROVIDE GFCI CIRCUIT BREAKER

bcra
T 253.627.4367 F 253.627.4395 WWW.BCRADESIGN.COM
2106 PACIFIC AVENUE, SUITE 300, TACOMA, WA 98402

SEAL

MICHAEL L. COZART — STATE OF WASHINGTON — 34306 — REGISTERED PROFESSIONAL ENGINEER

PROJECT
PORT OF EVERETT
WINE WALK BUILDING A12
XXXX SEINER DRIVE
EVERETT, WASHINGTON 98201

REVISIONS

DATE 12.13.2023
BCRA NO: 23045.00.00
DRAWN BY:
REVIEWED BY:
SHEET TITLE
BLDG A12
PANEL
SCHEDULES

bcra

© COPYRIGHT 2023 - BCRA, INC. ALL RIGHTS RESERVED

SHEET
E-602

100% DESIGN DEVELOPMENT

IF SHEET MEASURES LESS THAN 22"X34", IT IS A REDUCED PRINT. REDUCE SCALE ACCORDINGLY

22x34 6/9/2023 1:12:43 PM

GENERAL NOTES

1. ALL WORK PERFORMED SHALL BE DONE IN STRICT ACCORDANCE TO ALL APPLICABLE MECHANICAL, BUILDING, ENERGY, FUEL GAS, AND LOCAL CODES, WITH AMENDMENTS.
2. COORDINATE MECHANICAL WORK WITH ELECTRICAL, ARCHITECTURAL, AND STRUCTURAL WORK SHOWN ON OTHER CONTRACT DOCUMENTS. PROVIDE ADDITIONAL OFFSETS FOR COORDINATED INSTALLATION WHERE REQUIRED.
3. COORDINATE HVAC AND PLUMBING WORK PRIOR TO INSTALLATION. DUCTWORK AND EQUIPMENT ACCESS TAKES PRECEDENCE OVER ALL PIPING EXCEPT GRAVITY SYSTEMS FOR AVAILABLE SPACE.
4. COORDINATE EQUIPMENT CONNECTIONS WITH MANUFACTURERS' CERTIFIED DRAWINGS. COORDINATE AND PROVIDE DUCT AND PIPING TRANSITIONS REQUIRED FOR FINAL EQUIPMENT CONNECTIONS TO FURNISHED EQUIPMENT. FIELD VERIFY AND COORDINATE DUCT AND PIPING DIMENSIONS BEFORE FABRICATION.
5. LOCATIONS AND SIZES OF FLOOR, WALL, AND ROOF OPENINGS SHALL BE COORDINATED WITH OTHER TRADES INVOLVED. INCLUDE IN THE COST OF MECHANICAL WORK, CUTTING, CORING, PATCHING AND PAINTING OF EXISTING WALLS, CEILINGS, FLOORS AND ROOFS AS REQUIRED TO ACCOMMODATE WORK AS INDICATED IN THE MECHANICAL CONTRACT DOCUMENTS, UNLESS SPECIFICALLY SHOWN ON ARCHITECTURAL DRAWINGS.
6. MATERIALS WITHIN PLENUMS SHALL BE NONCOMBUSTIBLE OR SHALL HAVE A FLAME SPREAD INDEX OF NOT MORE THAN 25 AND A SMOKE-DEVELOPED INDEX OF NOT MORE THAN 50 WHEN TESTED IN ACCORDANCE WITH ASTM E 84 OR UL 723.
7. ALL ELECTRICAL WORK SHALL BE PERFORMED IN ACCORDANCE WITH NFPA 70 STANDARDS AND LOCAL REQUIREMENTS.
8. ALL FIELD WIRING SHALL REQUIRE AN ELECTRICAL PERMIT AND SHALL BE PERFORMED BY A LICENSED ELECTRICIAN.
9. LOCATE VALVES, WATER HAMMER ARRESTERS, CLEANOUTS, DAMPERS, AND SIMILAR COMPONENTS SO THAT THEY ARE ACCESSIBLE.

PLUMBING:

1. DOMESTIC WATER TUBE, PIPE, FITTINGS, JOINING MATERIALS, SPECIAL TIES, PLUMBING EQUIPMENT, PLUMBING FIXTURES, PLUMBING FITTINGS AND ALL OTHER APPURTENANCES IN CONTACT WITH DRINKING WATER SHALL BE LEAD-FREE EXCEPT THOSE EXPLICITLY EXEMPTED IN SECTION 3874 OF THE SAFE WATER DRINKING ACT. LEAD-FREE SHALL MEAN (A) NOT CONTAINING MORE THAN 0.2 PERCENT LEAD WHEN USED WITH RESPECT TO SOLDER AND FLUX; AND (B) NOT MORE THAN A WEIGHTED AVERAGE OF 0.25 PERCENT LEAD WHEN USED WITH RESPECT TO WETTED SURFACES OF DOMESTIC WATER TUBE, PIPE, FITTINGS, JOINING MATERIALS, SPECIALTIES, PLUMBING EQUIPMENT, PLUMBING FIXTURES, AND PLUMBING FITTINGS.
2. PROVIDE WATER HAMMER ARRESTORS IN DOMESTIC WATER PIPING IN ACCORDANCE WITH PDI-WH201.
3. VALVES, EXPANSION FITTINGS/LOOPS, AND PIPING SPECIALTIES SHALL BE FULL SIZE OF PIPE UNLESS NOTED OTHERWISE.
4. PROVIDE R-10 INSULATED SURFACE UNDER ELECTRIC WATER HEATERS.

PIPING:

1. PROVIDE INSULATION FOR PLUMBING SYSTEMS PER THE 2018 WSEC SECTION C403.
2. VALVES SHALL BE INSTALLED SO THAT SYSTEM REMAINS IN SERVICE WHEN EQUIPMENT OR PIPING ON EQUIPMENT SIDE OF VALVE IS REMOVED.
3. PROVIDE UNIONS AND/OR FLANGES AT EACH PIECE OF EQUIPMENT TO PERMIT DISASSEMBLY FOR ALTERATION AND REPAIRS.

NON-STRUCTURAL MECHANICAL COMPONENTS:

1. HANGERS AND SEISMIC BRACING FOR THE MECHANICAL SYSTEMS SHALL BE DESIGNED AND PROVIDED BY THE MECHANICAL CONTRACTOR. REFER TO CONTRACTOR SHOP DRAWINGS FOR LOCATIONS OF EQUIPMENT AND HUNG MECHANICAL SYSTEMS. THE MECHANICAL CONTRACTOR SHALL COORDINATE THE SUPPORT SYSTEMS AND DESIGN LOADS FOR HUNG MECHANICAL SYSTEMS WITH THE GENERAL CONTRACTOR AND OTHER TRADES THAT MAY BE IMPACTED.

PLUMBING

SYMBOL	DESCRIPTION	SYMBOL	DESCRIPTION
E	EXISTING PIPING		DOMESTIC COLD WATER (CW)
	GATE VALVE (GV)		DOMESTIC HOT WATER (HW)
	PRESSURE REDUCING VALVE (PRV)		SOIL, WASTE (S, W)
	CHECK VALVE (CV)		VENT (V), OR HIDDEN BELOW WASTE
	TEMP./PRESS. RELIEF VALVE (T&PRV)	G	NATURAL GAS PIPING
	BALL VALVE		POINT OF CONNECTION TO EXISTING SYSTEM
	BALANCING COCK (BC)		WASTE OR VENT UP
	PIPE DOWN		WALL CLEANOUT
	PIPE UP		FLUSH CLEANOUT (FCO/SCO)
	BRANCH-TOP CONNECTION		CLEAN OUT (CO)
	BRANCH-BOTTOM CONNECTION		IN LINE WASTE CONNECTION
	BRANCH-SIDE CONNECTION		P-TRAP
	FLOW DIRECTION		BRANCH PIPE DOWN OR WATER CONNECTION
	REDUCER		BRANCH PIPE UP OR WATER CONNECTION
	STRAINER		TEE & UP
	UNION		TEE
	DRAIN VALVE		ELBOWS, 90° & 45°
	TRAP PRIMER WITH ACCESS PANEL		CAP
	GAS COCK	T	THERMOMETER
MC	MECHANICAL CONTRACTOR	P	PRESSURE GAGE
EC	ELECTRICAL CONTRACTOR		FLOOR DRAIN
GC	GENERAL CONTRACTOR		CROSSING LINES, NON CONNECTING
POC	POINT OF CONNECTION		PIPE CONTINUATION
BFF	BELOW FINISHED FLOOR	SS-G	GREASE WASTE
WH	WALL HYDRANT	AFF	ABOVE FINISHED FLOOR
FWH	FREEZE RESISTANT WALL HYDRANT	GW	GREASE WASTE

bcra
T 253.627.4367 F 253.627.4395 WWW.BCRADESIGN.COM
2106 PACIFIC AVENUE, SUITE 300, TACOMA, WA 98402

SEAL

PROJECT
PORT OF EVERETT
WINE WALK BUILDING A12
XXXX SEINER DRIVE
EVERETT, WASHINGTON 98201

REVISIONS

DATE
12.13.2023

BCRA NO:
23045.00.00

DRAWN BY:

REVIEWED BY:

SHEET TITLE
PLUMBING LEGEND & GENERAL NOTES

bcra
© COPYRIGHT 2023 - BCRA, INC. ALL RIGHTS RESERVED

SHEET
P-101

100% DESIGN DEVELOPMENT

22x34 6/9/2023 1:12:43 PM

IF SHEET MEASURES LESS THAN 22"X34", IT IS A REDUCED PRINT. REDUCE SCALE ACCORDINGLY

CONSTRUCTION NOTES

1. WASTE PIPING INSTALLED ABOVE GRADE. SHOWN ON THIS PLAN FOR CLARITY.
2. START SANITARY INVERT @ 2.2' BFF.
3. 6"W TO SANITARY SEWER 4.1' BELOW FINISHED FLOOR. SEE CIVIL PLANS FOR CONTINUATION.
4. 4" GREASE LADEN WASTE 3.0' BELOW FINISHED FLOOR TO GREASE INTERCEPTOR. SEE CIVIL PLANS FOR CONTINUATION AND GREASE INTERCEPTOR DETAIL ON SHEET P-501.
5. 2"V FROM GREASE INTERCEPTOR.
6. 4" DOMESTIC WATER SERVICE. SEE CIVIL DRAWING FOR CONTINUATION.
7. 4" SANITARY & GREASE LADEN WASTE STUBBED INTO SPACE FOR FUTURE TENANT.
8. ¾" NG TO FIRE TABLE.
9. 4"W UP TO SCO. LOCATE SCO IN LANDSCAPING ADJACENT TO SIDEWALK.

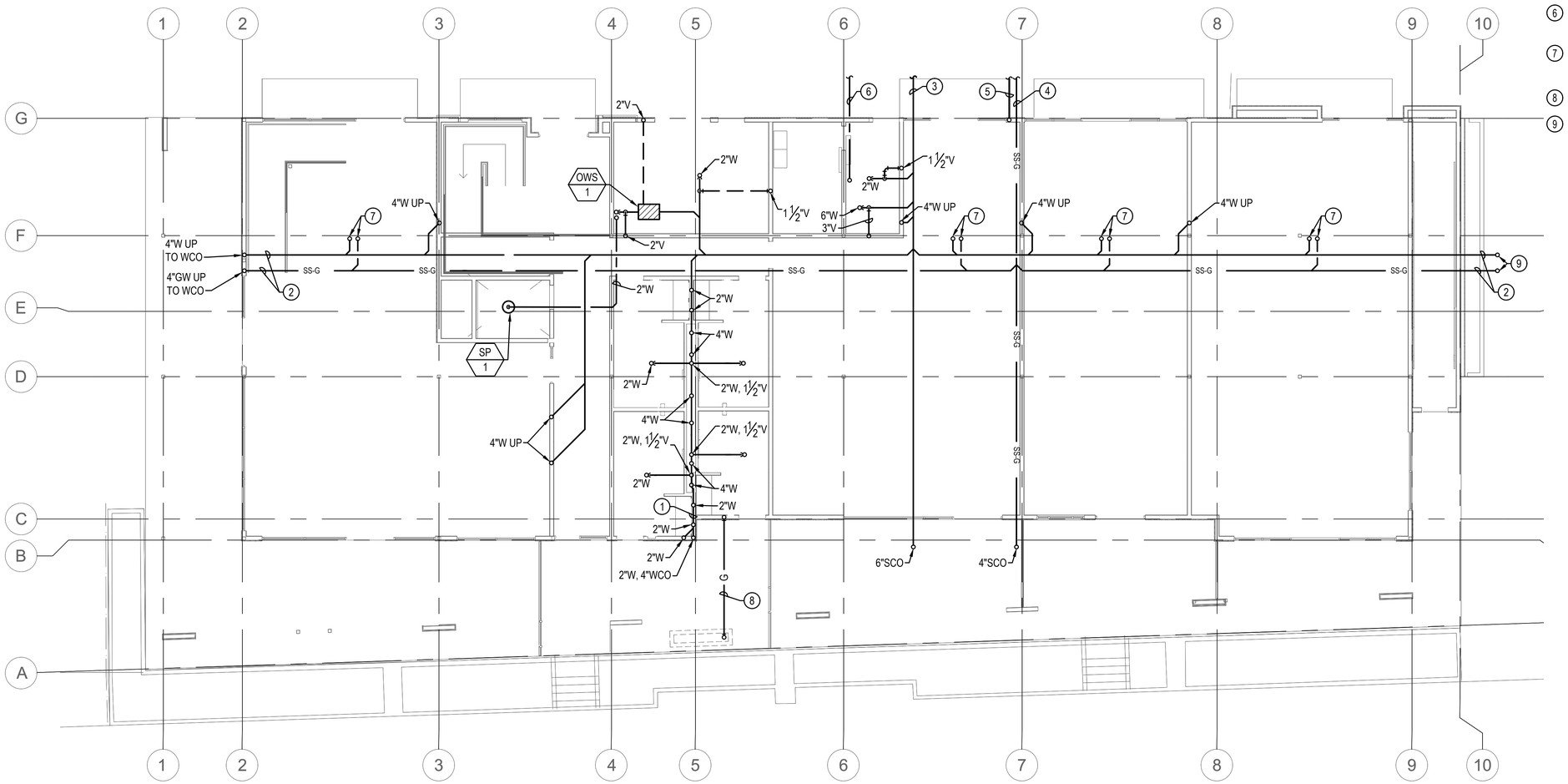

1 PLUMBING FOUNDATION PLAN
1/8" = 1'-0"

TRUE NORTH

0 4 8 16
SCALE: 1/8" = 1'-0"

bcra
T 253.627.4367 F 253.627.4395 WWW.BCRADESIGN.COM
2106 PACIFIC AVENUE, SUITE 300, TACOMA, WA 98402

SEAL

PROJECT
PORT OF EVERETT
WINE WALK BUILDING A12
XXXX SEINER DRIVE
EVERETT, WASHINGTON 98201

REVISIONS

DATE
12.13.2023

BCRA NO.
23045.00.00

DRAWN BY:

REVIEWED BY:

SHEET TITLE
PLUMBING
FOUNDATION PLAN

bcra
© COPYRIGHT 2023 - BCRA, INC. ALL RIGHTS RESERVED

SHEET
P-111

100% DESIGN DEVELOPMENT

IF SHEET MEASURES LESS THAN 22"X34", IT IS A REDUCED PRINT. REDUCE SCALE ACCORDINGLY

22x34 6/9/2023 1:12:43 PM

CONSTRUCTION NOTES

1. 3/4"NG TO FIREPLACE ON SECOND FLOOR.
2. AREA RESERVED FOR NATURAL GAS METER SET ASSEMBLY. COORDINATE INSTALLATION WITH GAS PURVEYOR. SEE MULTIPLE TENANT GAS METER DETAIL SHEET P-502.
3. 3/4" NG STUB OUT FOR FUTURE OUTDOOR RADIANT HEATERS. CAP PIPE AT WALL PENETRATION X'-X" AFF.
4. STACKED NATURAL GAS PIPING TIGHT TO CEILING STRUCTURE.
5. ROUTE WASTE PIPING AT CEILING STRUCTURE. START INVERT AT 2' BELOW SECOND FLOOR.

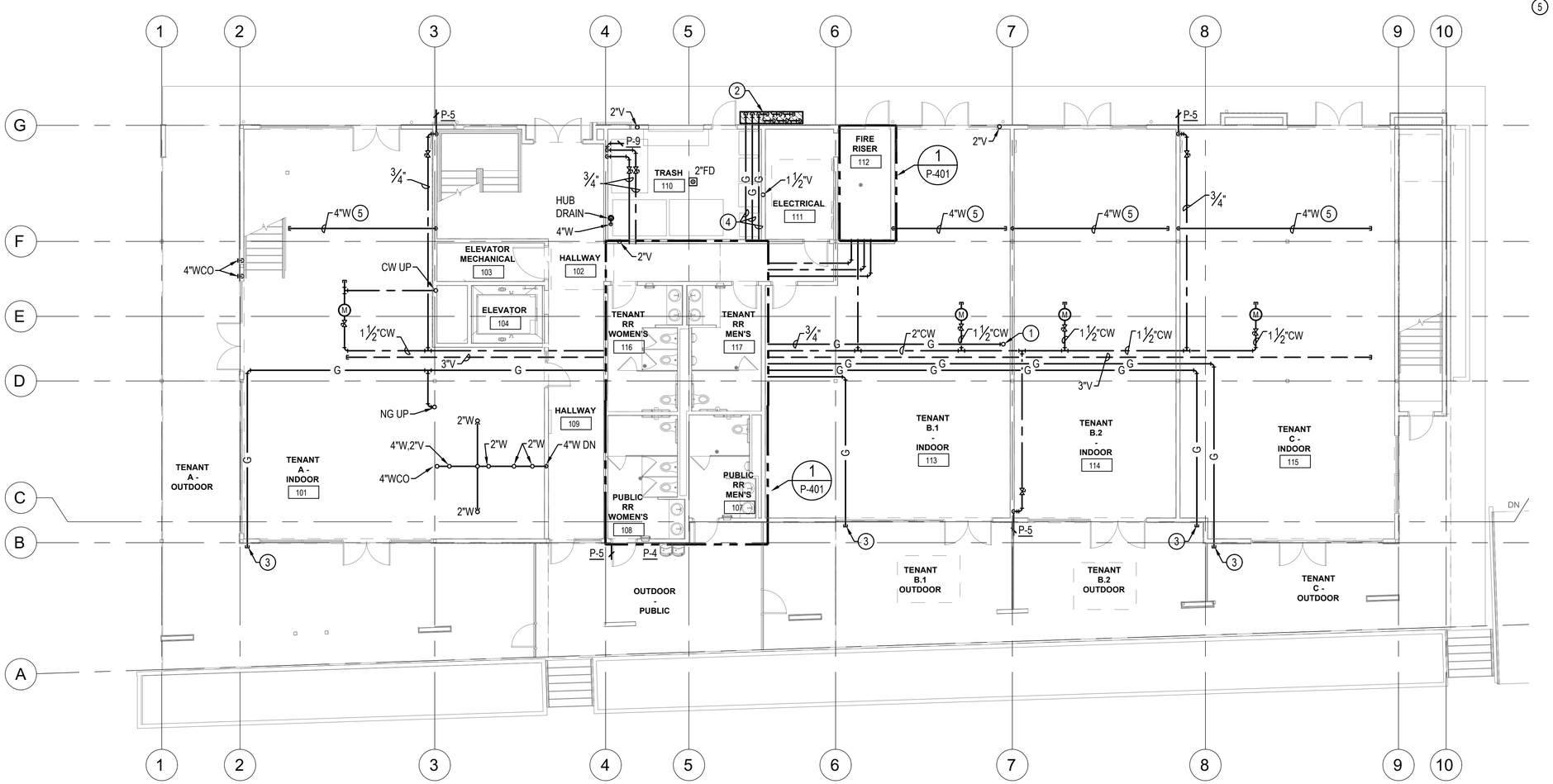

1 FIRST FLOOR PLUMBING PLAN
1/8" = 1'-0"

SCALE: 1/8" = 1'-0"

TRUE NORTH

bcra
T 253.627.4367 F 253.627.4395 WWW.BCRADESIGN.COM
2105 PACIFIC AVENUE, SUITE 300, TACOMA, WA 98402

SEAL

PROJECT
PORT OF EVERETT
WINE WALK BUILDING A12
XXXX SEINER DRIVE
EVERETT, WASHINGTON 98201

REVISIONS

DATE
12.13.2023

BCRA NO.
23045.00.00

DRAWN BY:

REVIEWED BY:

SHEET TITLE
FIRST FLOOR PLUMBING PLAN

bcra

© COPYRIGHT 2023 - BCRA, INC. ALL RIGHTS RESERVED

SHEET
P-121

100% DESIGN DEVELOPMENT

IF SHEET MEASURES LESS THAN 22"X34", IT IS A REDUCED PRINT. REDUCE SCALE ACCORDINGLY

ZZ-34 6/9/2023 1:12:43 PM

CONSTRUCTION NOTES

1. CW FROM TENANT "A" BELOW.
2. XX" NG STUB OUT FOR FUTURE OUTDOOR RADIANT HEATERS. CAP PIPE AT WALL PENETRATION X'-X" AFF.

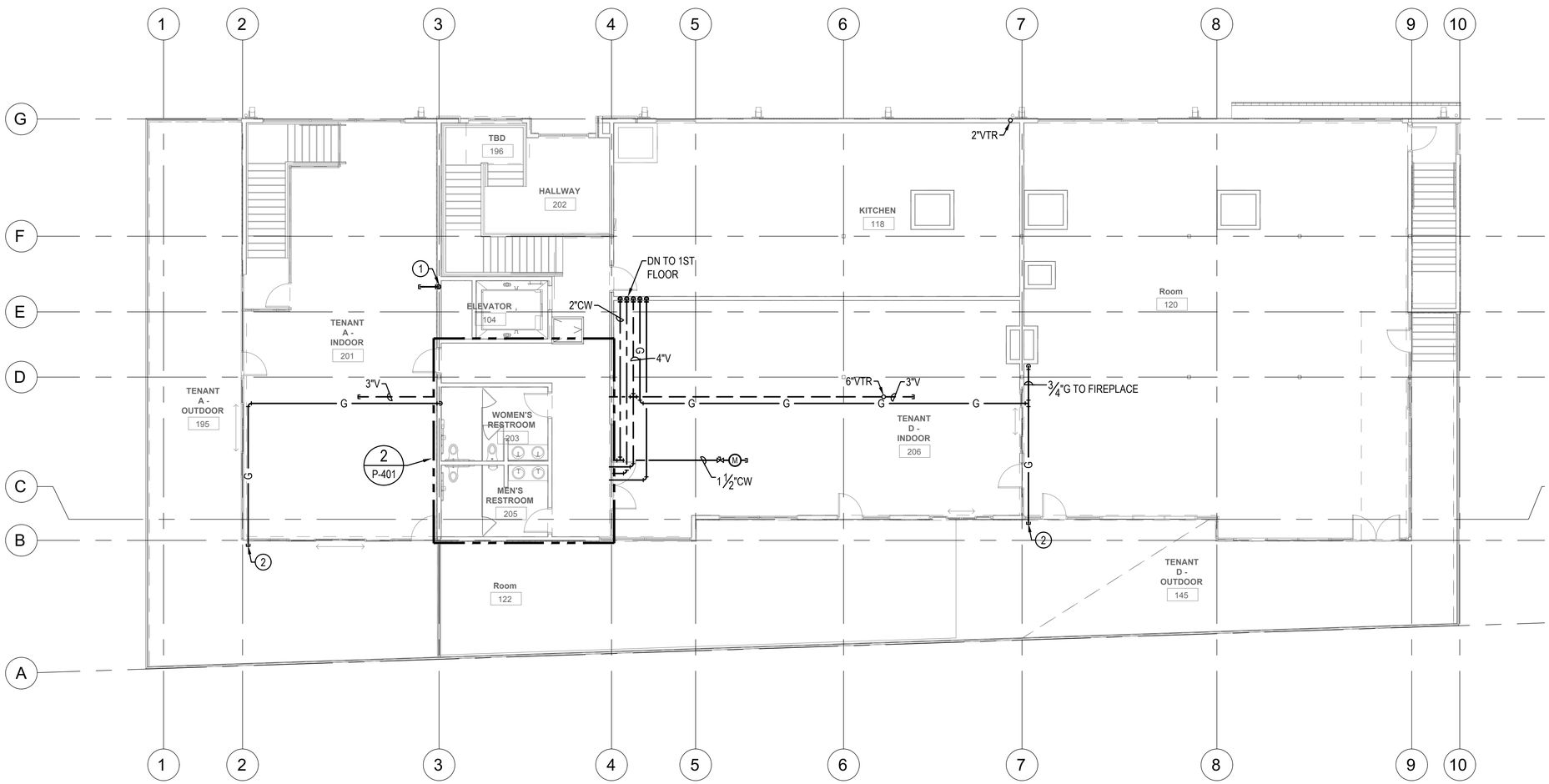

1 SECOND FLOOR PLUMBING PLAN

1/8" = 1'-0"

TRUE NORTH

SCALE: 1/8" = 1'-0"

bcra
T 253.627.4367 F 253.627.4395 WWW.BCRADESIGN.COM
2106 PACIFIC AVENUE, SUITE 300, TACOMA, WA 98402

SEAL

PROJECT
PORT OF EVERETT
WINE WALK BUILDING A12
XXXX SEINER DRIVE
EVERETT, WASHINGTON 98201

REVISIONS

DATE
12.13.2023

BCRA NO.
23045.00.00

DRAWN BY:

REVIEWED BY:

SHEET TITLE
SECOND FLOOR PLUMBING PLAN

bcra

© COPYRIGHT 2023 - BCRA, INC. ALL RIGHTS RESERVED

SHEET

P-122

100% DESIGN DEVELOPMENT

IF SHEET MEASURES LESS THAN 22"X34", IT IS A REDUCED PRINT. REDUCE SCALE ACCORDINGLY

22x34 6/9/2023 1:12:43 PM

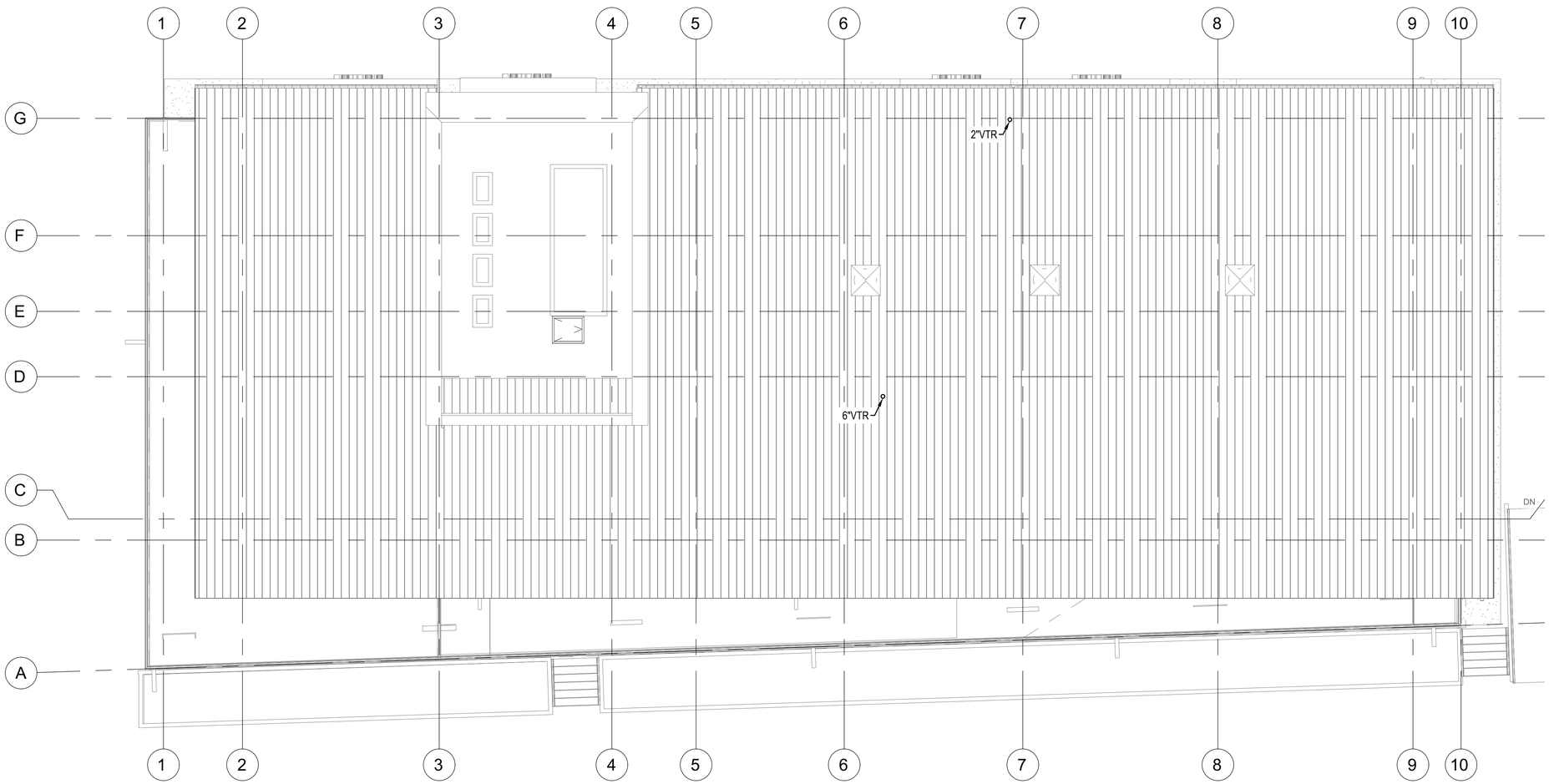

1 ROOF PLUMBING PLAN
1/8" = 1'-0"

TRUE NORTH

0 4 8 16
SCALE: 1/8" = 1'-0"

22x34 6/9/2023 1:12:43 PM

bcra
T 253.627.4367 F 253.627.4395 WWW.BCRADESIGN.COM
2106 PACIFIC AVENUE, SUITE 300, TACOMA, WA 98402

SEAL

PROJECT
PORT OF EVERETT
WINE WALK BUILDING A12
XXXX SEINER DRIVE
EVERETT, WASHINGTON 98201

REVISIONS

DATE
12.13.2023

BCRA NO:
23045.00.00

DRAWN BY:

REVIEWED BY:

SHEET TITLE
ROOF PLUMBING PLAN

bcra
© COPYRIGHT 2023 - BCRA, INC. ALL RIGHTS RESERVED

SHEET
P-131

100% DESIGN DEVELOPMENT

IF SHEET MEASURES LESS THAN 22"X34", IT IS A REDUCED PRINT. REDUCE SCALE ACCORDINGLY

CONSTRUCTION NOTES

1. HOT WATER HEATER AND EXPANSION TANK TO BE WALL MOUNTED ABOVE RISERS. SHOWN OFFSET FOR CLARITY, TMV TO BE WALL MOUNTED BELOW WATER HEATER.
2. ¾" NG TO FIRE TABLE. SEE SHEET P-111 FOR CONTINUATION.

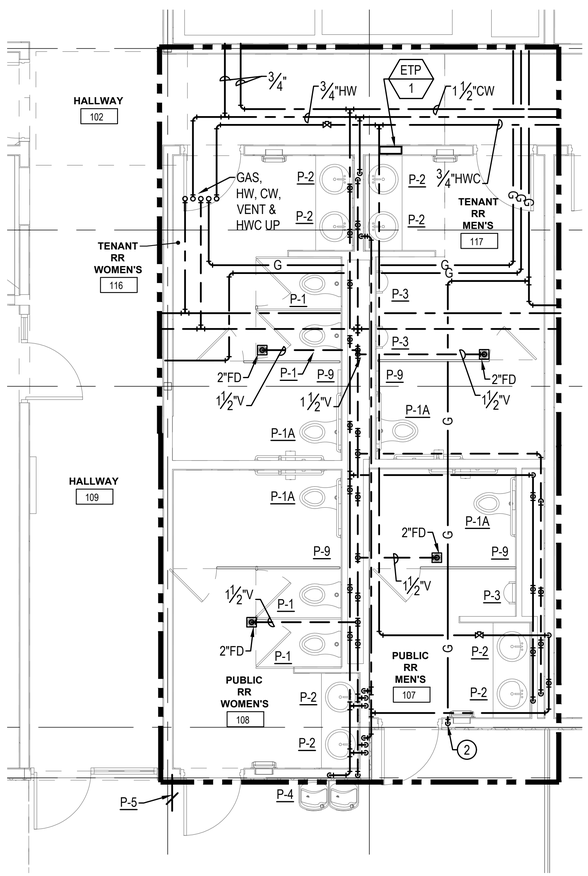

1 ENLARGED PLUMBING FIRST FLOOR PLAN
1/4" = 1'-0"

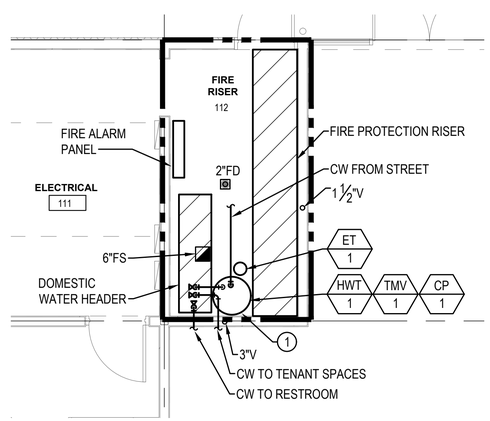

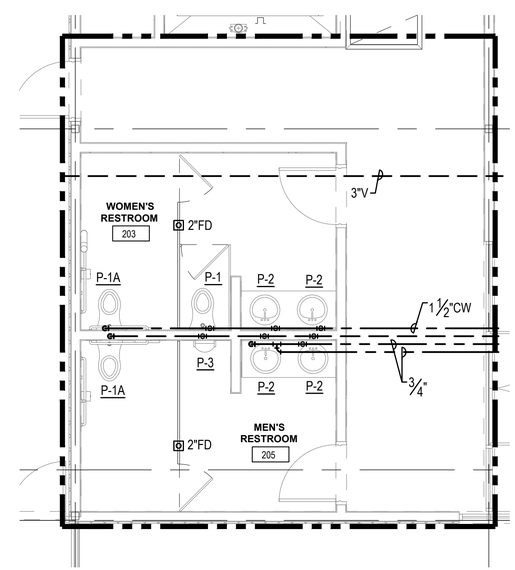

2 ENLARGED PLUMBING SECOND FLOOR PLAN
1/4" = 1'-0"

SCALE: 1/4" = 1'-0"

TRUE NORTH

bcra
T 253.627.4367 F 253.627.4395 WWW.BCRADESIGN.COM
2106 PACIFIC AVENUE, SUITE 300, TACOMA, WA 98402

SEAL

PROJECT
PORT OF EVERETT
WINE WALK BUILDING A12
XXXX SEINER DRIVE
EVERETT, WASHINGTON 98201

REVISIONS

DATE
12.13.2023

BCRA NO.
23045.00.00

DRAWN BY:

REVIEWED BY:

SHEET TITLE
ENLARGED PLUMBING FLOOR PLANS

bcra

© COPYRIGHT 2023 - BCRA, INC. ALL RIGHTS RESERVED

SHEET
P-401

100% DESIGN DEVELOPMENT

IF SHEET MEASURES LESS THAN 22"X34", IT IS A REDUCED PRINT. REDUCE SCALE ACCORDINGLY

22x34 6/9/2023 1:12:43 PM

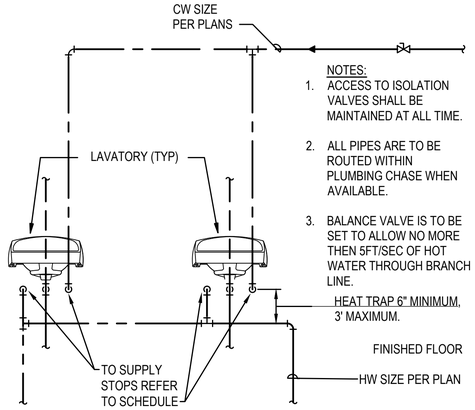

NOTES:

1. ACCESS TO ISOLATION VALVES SHALL BE MAINTAINED AT ALL TIME.
2. ALL PIPES ARE TO BE ROUTED WITHIN PLUMBING CHASE WHEN AVAILABLE.
3. BALANCE VALVE IS TO BE SET TO ALLOW NO MORE THEN 5FT/SEC OF HOT WATER THROUGH BRANCH LINE.

7 PUBLIC LAV. HOT WATER PIPING DETAIL 2

SCALE: DIAGRAMMATIC

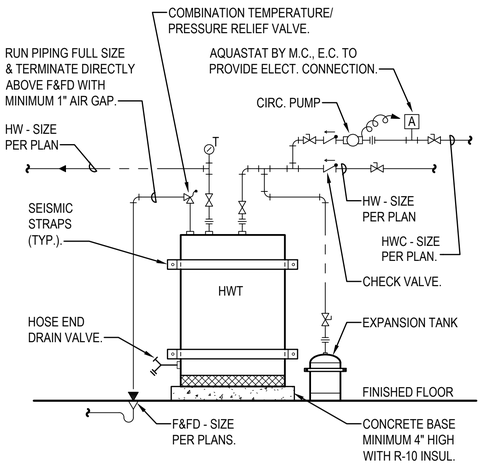

6 HOT WATER TANK PIPING DIAGRAM

SCALE: DIAGRAMMATIC

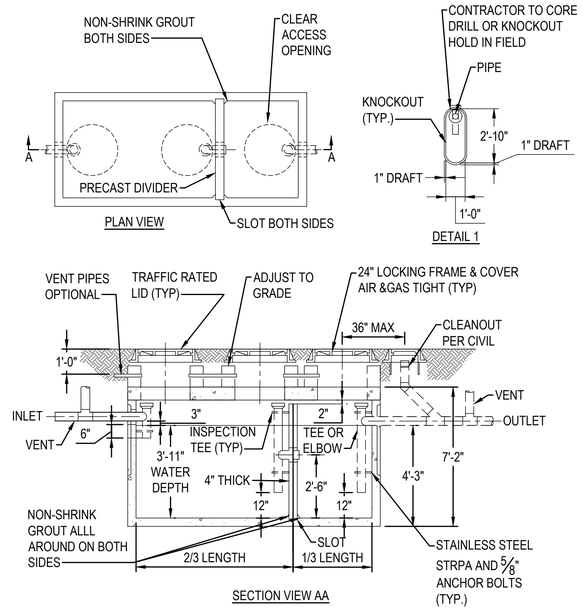

5 GREASE INTERCEPTOR DETAIL

SCALE: NO SCALE

GRAVITY GREASE INTERCEPTOR SIZING

ITEM	FIXTURE	QTY	DIRECT DRAIN IN	INDIRECT DRAIN IN	FIXTURE DFU	DFU TOTAL	FLOW GPM	NOTES
01	DISHWASHER	2	2"	-	2	4	-	1
02	FLOOR DRAIN	2	2"	-	2	4	-	2
03	FLOOR SINK	2	2"	-	2	4	-	2
04	3 COMP SINK	2	2"	-	12	24	-	2
05	1 COMP SINK	4	2"	-	3	12	-	2
06	HAND SINK	4	2"	-	2	8	-	2
TOTAL						56		

INTERCEPTOR SIZE BASED ON DFU'S AND 2018 UPC TABLE 1014.3.6 — 1250 GAL

NOTES FOR GRAVITY GREASE INTERCEPTOR SIZING

1. DFU'S FOR PLUMBING FIXTURES ARE BASED ON 2018 UPC TABLE 702.1.
2. DFU'S FOR FLOOR DRAINS AND FLOOR SINKS (TRAP ARMS) ARE BASED ON 2018 UPC TABLE 702.1.

NOTES

1. PROVIDE OLD CASLE PRECAST MODEL GI-1250, 1250 GALLONS, PRECAST CONCRETE VAULT OR APPROVED EQUAL.
2. CONCRETE: 28 DAY COMPRESSIVE STRENGTH f'c= 7000 PSI.
3. REBAR: ASTM A-615 GRADE 60.
4. MESH: ASTM A-185 GRADE 65.
5. DESIGN: ACI-318-02 BUILDING CODE, ASTM C-857 "MINIMUM STRUCTURAL DESIGN LOADING FOR UNDERGROUND PRECAST CONCRETE UTILITY STRUCTURES."
6. COVER LOADS: MINIMUM H-20 TRUCK WHEEL W/30% IMPACT PER AASHTO. PROVIDE CUSTOM LOAD BEARING CAPABILITY FOR INTERCEPTOR LOCATIONS IN FIRE LANES (45,000 LBS OVER 18 INCH SQUARE FOOTPRINT).
7. FILL WILL CLEAN WATER PRIOR TO START-UP OF SYSTEM.
8. CONTRACTOR SHALL PROVIDE ALL PIPING AND SAMPLING TEES.
9. ANGLES AND FASTENERS SHALL BE STAINLESS STEEL.
10. GRAY WATER ONLY. BLACK WATER SHALL BE CARRIED BY SEPARATE SIDE SEWER.
11. IF KNOCKOUTS ARE NOT PRESENT, THEN PIPE OPENING SHALL BE CORE-DRILLED. PIPE OPENINGS SHALL BE 2" LARGER THAN THE PIPE DIAMETER.
12. PIPE CONNECTIONS TO VAULT SHALL BE WITH KOR-N-SEAL OR APPROVED EQUAL FOR CORE-DRILLED OPENINGS, OR SAND COLLAR FOR KNOCKOUT OPENINGS, OR SAND COLLAR FOR KNOCKOUT OPENING. SEAL ALL PIPE CONNECTION WITH NON-SHRINK GROUT.
13. LOCATE VAULT WITHIN 20 FEET OF DRIVE FOR ACCESS BY MAINTENANCE VEHICLES.
14. PVC INSPECTION AND SAMPLING TEES SHALL BE THE SAME SIZE AS THE OUTLET PIPE FOR 6" OUTLETS OR GREATER. USE 6" PVC TEE WHERE OUTLET PIPE SIZE IS LESS THAN 6". PROVIDE CASKETED CAP ON TOP OF THE SAMPLING TEE.
15. PROVIDE RISERS BELOW ACCESS OPENINGS TO ALLOW CLEAR ACCESS TO RISER AND VAULT CHAMBER.
16. PROVIDE EXTENSIONS SO COVER IS FLUSH WITH FINISHED GRADE.

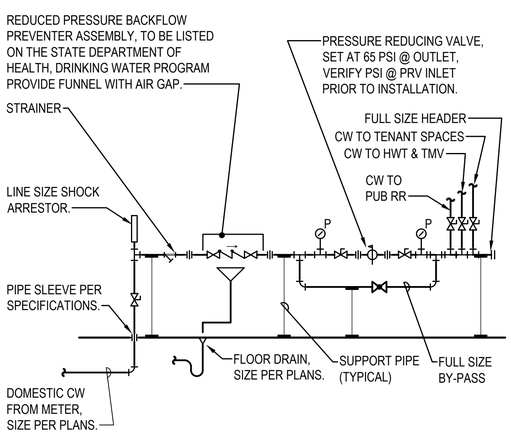

4 DOMESTIC WATER HEADER DETAIL

SCALE: DIAGRAMMATIC

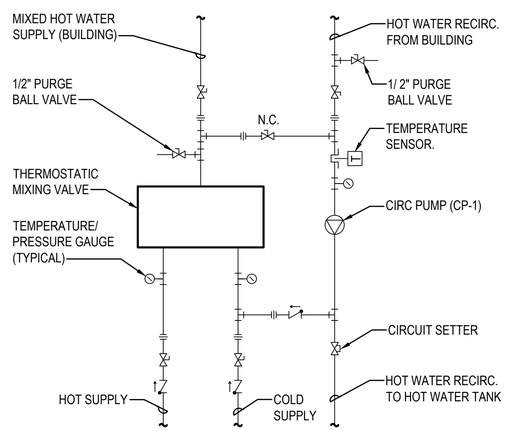

3 THERMOSTATIC MIXING VALVE INSTALLATION DETAIL

SCALE: DIAGRAMMATIC

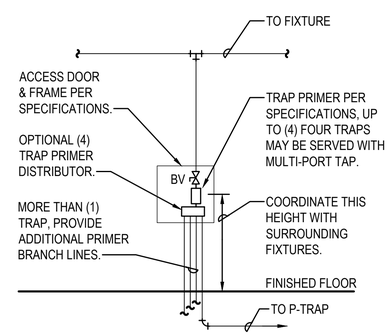

2 TRAP PRIMER PIPING DIAGRAM

SCALE: DIAGRAMMATIC

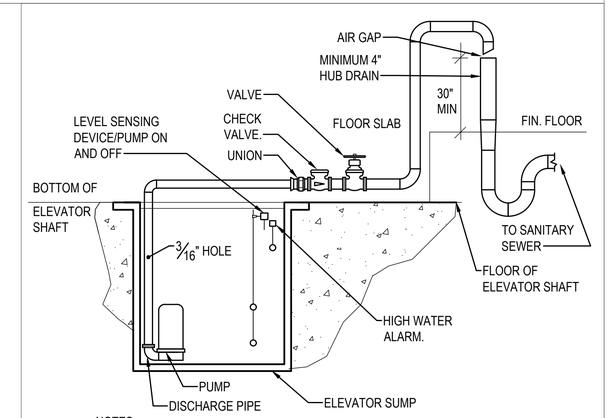

NOTES:
1. SEE FLOOR PLANS FOR CONTROL PANEL LOCATIONS

1 ELEVATOR SUMP PUMP INSTALLATION DETAIL

SCALE: DIAGRAMMATIC

bcra
T 253.627.4367 F 253.627.4395 WWW.BCRADESIGN.COM
2106 PACIFIC AVENUE, SUITE 300, TACOMA, WA 98402

SEAL

PROJECT
PORT OF EVERETT
WINE WALK BUILDING A12
XXXX SEINER DRIVE
EVERETT, WASHINGTON 98201

REVISIONS

DATE
12.13.2023
BCRA NO.
23045.00.00
DRAWN BY:
REVIEWED BY:
SHEET TITLE
PLUMBING DETAILS I

© COPYRIGHT 2023 - BCRA, INC. ALL RIGHTS RESERVED

SHEET
P-501

100% DESIGN DEVELOPMENT

IF SHEET MEASURES LESS THAN 22"X34", IT IS A REDUCED PRINT. REDUCE SCALE ACCORDINGLY

22x34 6/9/2023 1:12:43 PM

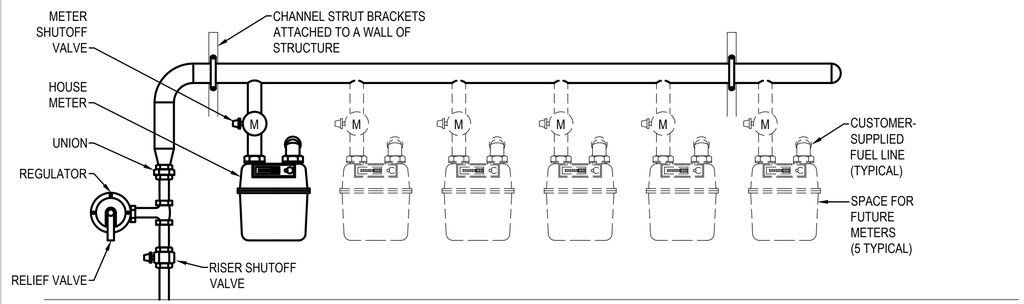

9 MULTIPLE TENANT GAS METER DETAIL

SCALE: DIAGRAMMATIC

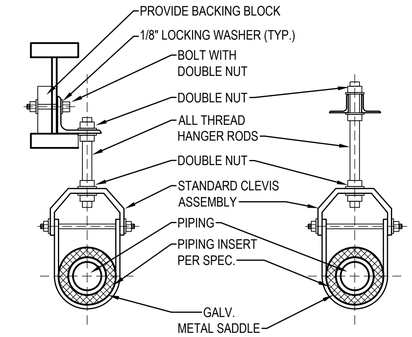

8 PIPE HANGER DETAIL

SCALE: DIAGRAMMATIC

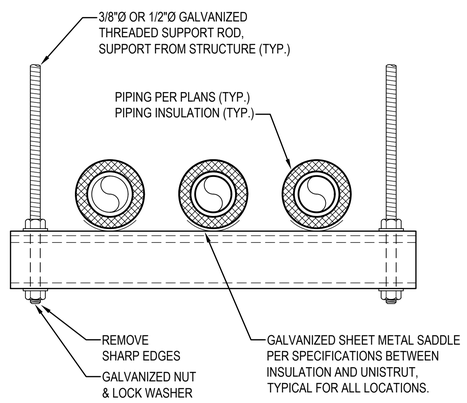

NOTE:
PROVIDE THREE SUPPORT RODS FOR ALL STRUTS LONGER THAN 24"

7 PIPE SUPPORT DETAIL

SCALE: DIAGRAMMATIC

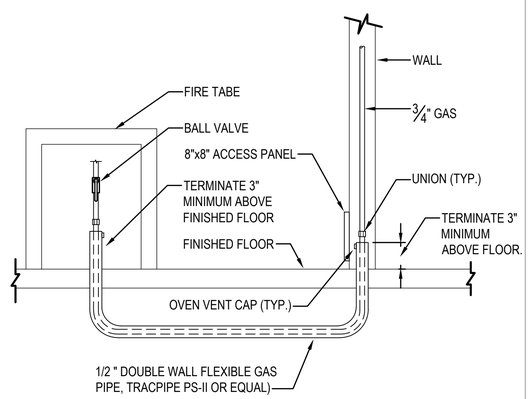

6 UNDER GROUND GAS PIPE CONDUIT DETAIL

SCALE: DIAGRAMMATIC

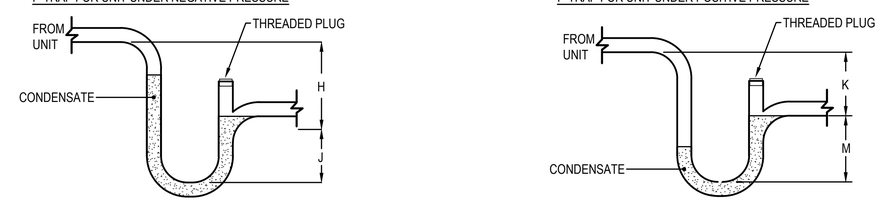

H = (1" FOR EACH 1" OF MAXIMUM NEGATIVE PRESSURE) + 1"

$J = (\frac{1}{2})\ H$

K = 1/2" MINIMUM
M = 1/2" + MAXIMUM POSITIVE PRESSURE

PRESSURE	H	J	K	M
1" W.C.	2"	1"	1/2"	1-1/2"
2" W.C.	3"	1.5"	1/2"	2-1/2"
3" W.C.	4"	2"	1/2"	3-1/2"

5 CONDENSATE P-TRAP DETAIL

SCALE: DIAGRAMMATIC

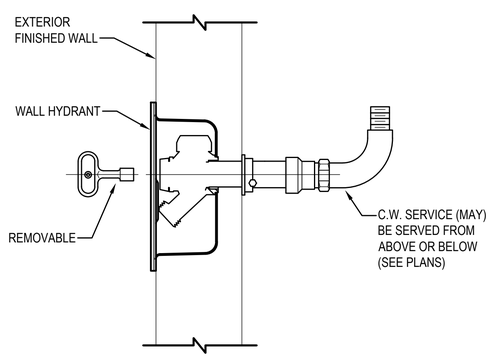

NOTE
INSTALL @ 18" ABOVE FINISHED SURFACE.

4 FREEZE PROTECTED WALL HYDRANT DETAIL

SCALE: DIAGRAMMATIC

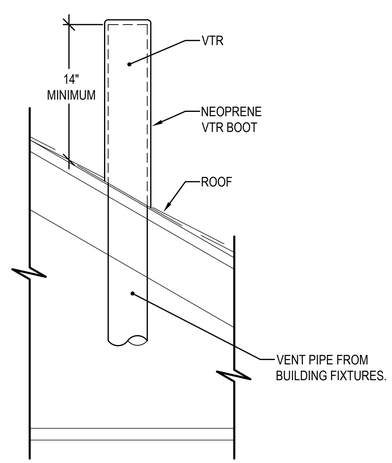

3 VENT THROUGH ROOF DETAIL

SCALE: DIAGRAMMATIC

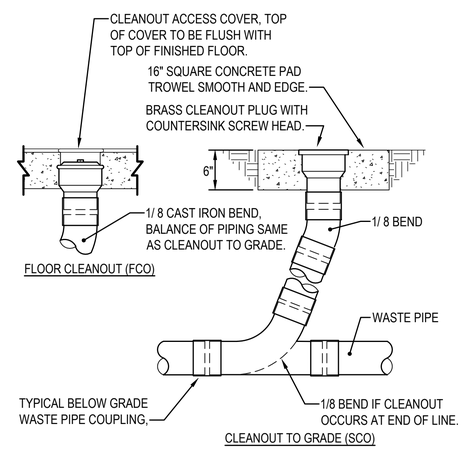

2 PVC CLEANOUT DETAIL

SCALE: DIAGRAMMATIC

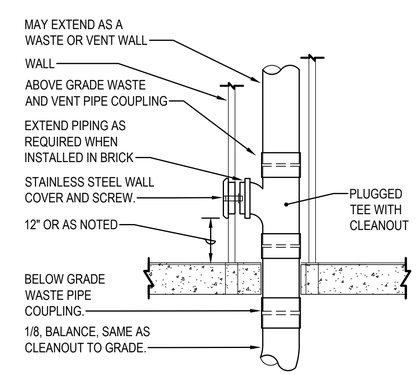

WALL CLEANOUT (WCO)

1 PVC CLEANOUT DETAIL

SCALE: DIAGRAMMATIC

22x34 6/9/2023 1:12:43 PM

IF SHEET MEASURES LESS THAN 22"X34", IT IS A REDUCED PRINT. REDUCE SCALE ACCORDINGLY

bcra
T 253.627.4367 F 253.627.4395 WWW.BCRADESIGN.COM
2106 PACIFIC AVENUE, SUITE 300, TACOMA, WA 98402

SEAL

PROJECT
PORT OF EVERETT
WINE WALK BUILDING A12
XXXX SEINER DRIVE
EVERETT, WASHINGTON 98201

REVISIONS

DATE
12.13.2023
BCRA NO.
23045.00.00
DRAWN BY:
REVIEWED BY:
SHEET TITLE
PLUMBING DETAILS II

bcra

© COPYRIGHT 2023 - BCRA, INC. ALL RIGHTS RESERVED

SHEET
P-502

100% DESIGN DEVELOPMENT

WATER HEATER SCHEDULE

UNIT NO	MANUFACTURER	MODEL	LOCATION	AREA SERVED	TYPE	INPUT MBH (KW)	EFFICIENCY	TANK SIZE (GAL)	TEMP RISE	RECOVERY (GPH) @ 100°F RISE	WET WEIGHT (LB)	ELECTRICAL			STARTER FURNISHED BY	DISCONNECT FURNISHED BY	REMARKS
												MCA (FLA)	VOLTS	PH			
HWT-1	AO SMITH	DRE-52	FIRE RISER	BUILDING	ELECTRIC	12.3	95%	50	100.0	50	690	5	277	1	MFR	EC	1,2,3

NOTES FOR WATER HEATER SCHEDULE

1. SINGLE POINT POWER CONNECTION. PROVIDE ALL POWER TRANSFORMERS AS NECESSARY.
2. SET TEMPERATURE AT 120F.
3. TANK TO BE ASME RATED.

PUMP SCHEDULE

UNIT NO	MANUFACTURER	MODEL	LOCATION	SYSTEM	MOTOR		PIPE SIZE (IN)	HEAD (FT)	FLOW (GPM)	ELECTRICAL			STARTER/VFD FURNISHED BY	DISCONNECT FURNISHED BY	REMARKS
					HP (WATTS)	RPM				FLA	VOLTS	PH			
CP-1	TACO	0026e	FIRE RISER	BUILDING	(120)	ECM	1 1/4"	21.0	20	1.0	115	1	MFR	EC	1,2
SP-1	WEIL	1411-OSS	ELEVATOR	ELEVATOR SUMP	1/2	1750	-	20.0	50	3.1	120	1	MFR	EC	3

NOTES FOR PUMP SCHEDULE

1. PUMP SHALL BE STAINLESS STEEL LEAD FREE CONSTRUCTION, RATED FOR DOMESTIC USE.
2. PROVIDE VARIABLE SPEED PUMP FOR CONSTANT PRESSURE CONTROL (ACTIVE ADAPT) IN DOMESTIC RECIRCULATION SYSTEM. PUMP SHALL INCLUDE ECM MOTOR.
3. PROVIDE WITH OIL SMART SWITCH AND ALARM.

PLUMBING FIXTURE SCHEDULE

UNIT NO	FIXTURE	MOUNTING	MANUFACTURER AND MODEL NUMBERS		W	V	HW	CW	REMARKS
P-1	WATER CLOSET	WALL	TOILET: SEAT: FLUSH VALVE:	KOHLER KINGSTON K-4325 KOHLER LUSTRA K4670-C SLOAN ROYAL 111-SMO-1.28	4"	2"	-	1"	1.28 GPF FLUSHOMETER. PROVIDE WITH BOLT CAPS.
P-1A	WATER CLOSET ADA	WALL	TOILET: SEAT: FLUSH VALVE:	KOHLER KINGSTON K-4325 KOHLER LUSTRA K4670-C SLOAN ROYAL 111-SMO-1.28	4"	2"	-	1"	1.28 GPF FLUSHOMETER. PROVIDE WITH BOLT CAPS. ADA COMPLIANT. INSTALL RIM HEIGHT AT 18"AFF.
P-2	URINAL ADA	WALL	URINAL: FLUSH VALVE:	SLOAN SU-1009 SLOAN ROYAL 186-0.125-DBP	2"	1-1/2"	-	3/4"	0.125 GPF FLUSHOMETER. ADA COMPLIANT
P-3	LAVATORY ADA	COUNTER	SINK: FITTINGS: SUPPLIES: TRAP:	KOHLER FARMINGTON K-2905-4 MOEN CHATEAU L4621 MCGUIRE LFBV MCGUIRE MCT	2"	1-1/2"	1/2"	1/2"	ADA COMPLIANT, 0.5 GPM. PROVIDE WITH EBC INSTITUTIONAL ADA INSULATOR KIT.
P-4	FREEZE-PROOF EXTERIOR DRINKING FOUNTAIN W/ BOTTLE FILLER	WALL	FIXTURE:	MURDOCK GSC55-FRA1	2"	1-1/2"		1/2"	FREEZE-PROOF RATED, EXTERIOR MOUNTED DRINKING FOUNTAIN, BARRIER FREE, SINGLE HEIGHT WITH BOTTLE FILLER, AND VANDAL RESISTEANT BUBBLERS. PROVIDE WITH TRAP, SERVICE SUPPLY, AND MFR SUPPORT SYSTEM. PROVIDE WITH FILTER.
P-5	FREEZE RESISTANT WALL HYDRANT	WALL	FIXTURE:	JR SMITH 5619 - SAP			3/4"		
P-6	MOP SINK	FLOOR	SINK: FITTINGS: WASTE: TRAP:	FLORESTONE MSR-3624 CHICAGO FAUCETS 897-CP FLORESTONE MR-375 CAST IRON	3"	2"	3/4"	3/4"	MOUNT FITTINGS AT 42" AFF, PROVIDE WITH 60" HOSE WITH CLAMP AND FOUR STAINLESS STEEL RIM GUARDS.
P-7	ROOF DRAIN WITH OVERFLOW	UPPER ROOF	FIXTURE	ZURN Z165	-	-	-	-	SIZE AS INDICATED ON THE PLANS.
P-8	OVERFLOW ROOF DRAIN SPOUT	UPPER ROOF	FIXTURE	ZURN Z165	-	-	-	-	SIZE AS INDICATED ON THE PLANS.
P-9	INTERIOR HOSE BIBB	FLOOR	UNIT:	WOODFORD 122	-	-	1/2"	1/2"	PROVIDE WITH LOCKABLE DOOR.

EXPANSION TANK SCHEDULE (DOMESTIC HOT WATER)

UNIT NO	MANUFACTURER	MODEL	LOCATION	UNIT SERVED	MAXIMUM TANK VOLUME (GAL)	MAXIMUM ACCEPTANCE (GAL)	MIN TEMP	MAX TEMP	MAX PRESSURE (PSI)	TANK CONFIG.	REMARKS
ET-1	AMTROL	ST-5	FIRE RISER	HWT-1	2	0.45	40	140	125	VERTICAL	1,2,3,4

NOTES FOR EXPANSION TANK SCHEDULE

1. ASME TANK CONSTRUCTION
2. INSTALL DRAIN VALVE BETWEEN SHUT-OFF VALVE AND TANK FOR CHECKING AND ADJUSTING TANK AIR CHARGE.
3. PROVIDE BALL VALVE SHUT-OFF VALVE WITH LOCKABLE HANDLE, VALVE TO BE LOCKED OPEN FOR OPERATION.
4. ADJUST TANK PRE-CHANGE TO EQUAL THE PRESSURE BOOSTER WATER PRESSURE OR WATER PRESSURE.

THERMOSTATIC MIXING VALVE SCHEDULE

UNIT NO	MANUFACTURER	MODEL	LOCATION	FLOW (GPM)		ELECTRICAL			REMARKS
				MIN (1)	MAX	FLA	VOLTS	PH	
TMV-1	LEONARD		FIRE RISER	0.25	50	2	120	1	1, 2, 3, 4, 5

NOTES FOR THERMOSTATIC MIXING VALVE SCHEDULE

1. MINIMUM FLOW ASSUMES CONTINUOUSLY OPERATING CIRCULATION PUMP.
2. MAXIMUM FLOW ASSUMES 5 PSI PRESSURE DROP.
3. PROVIDE WITH VARIABLE SPEED PUMP
4. SINGLE POINT POWER CONNECTION.
5. UNIT TO BE CONNECTED TO NORMAL POWER.

OIL WATER SEPERATOR SCHEDULE

UNIT NO	MANUFACTURER	MODEL	DIMENSIONS (LxWxH)	STATIC CAPACITY (GALLONS)	MAX FLOW RATE (GPM)	REMARKS
OWS-1	JR SMITH	8510	35x20	50	10	

NOTES FOR OIL-WATER SEPARATOR SCHEDULE

1. PROVIDE WITH TRAFFIC RATED LID AND EXTENSION AS REQUIRED FOR ACCESS ON GRADE.

ELECTRONIC TRAP PRIMER SCHEDULE

UNIT NO	MANUFACTURER	LOCATION	NUMBER OF TRAPS	ELECTRICAL			REMARKS
				VOLTS	W	PH	
ETP-1	PRECISION PLUMBING PRODUCTS	TENANTS RESTROOM	6	120	6	1	1

NOTES FOR ELECTRONIC TRAP PRIMER SCHEDULE

1. PROVIDE WITH CABINET AND ACCESS PANEL FOR SURFACE MOUNT INSTALLATIONS. PROVIDE WITH ACCESS PANEL WHEN INSTALLED RECESSED.

bcra
T 253.627.4367 F 253.627.4395 WWW.BCRADESIGN.COM
2106 PACIFIC AVENUE, SUITE 300, TACOMA, WA 98402

SEAL

PROJECT
PORT OF EVERETT
WINE WALK BUILDING A12
XXXX SEINER DRIVE
EVERETT, WASHINGTON 98201

REVISIONS

DATE
12.13.2023

BCRA NO.
23045.00.00

DRAWN BY:

REVIEWED BY:

SHEET TITLE
PLUMBING SCHEDULES

bcra

© COPYRIGHT 2023 - BCRA, INC. ALL RIGHTS RESERVED

SHEET
P-601

100% DESIGN DEVELOPMENT

22x34 6/9/2023 1:12:43 PM

IF SHEET MEASURES LESS THAN 22"X34", IT IS A REDUCED PRINT. REDUCE SCALE ACCORDINGLY

FIRE ALARM S SYSTEM LEGEND

SYMBOL	DESCRIPTION
FACP	FIRE ALARM SYSTEM CONTROL PANEL
FAPS	FIRE ALARM SYSTEM POWER SUPPLY FOR NOTIFICATION DEVICES
FARAP	FIRE ALARM SYSTEM REMOTE ANNUNCIATOR PANEL
AES	AES WIRELESS TRANSCEIVER
BAT	BATTERY CABINET
GMAP	GRAPHIC MAP
	SMOKE DETECTOR (CEILING MOUNTED)
	HEAT DETECTOR (CEILING MOUNTED)
C/O	CARBON MONOXIDE SENSOR
P	MANUAL PULL STATION - WALL MOUNT OPERABLE PART BETWEEN 42" AND 48" ABOVE FINISH FLOOR
	DUCT SMOKE DETECTOR
RT / RI	REMOTE TEST STATION / REMOTE INDICATOR
FS	SPRINKLER SYSTEM FLOW SWITCH
PS	SPRINKLER SYSTEM PRESSURE SWITCH
TS	SPRINKLER SYSTEM TAMPER SWITCH
H/L	SPRINKLER SYSTEM HIGH / LOW PRESSURE SWITCH
PIV	SPRINKLER SYSTEM POST INDICATOR VALVE
BFP	SPRINKLER SYSTEM BACKFLOW PREVENTER
M	FIRE ALARM SYSTEM MONITOR MODULE
R	FIRE ALARM SYSTEM RELAY MODULE
	FIRE ALARM HORN W/CLEAR (WHITE) STROBE - WALL MOUNTED W/ THE ENTIRE STROBE LENS NOT LESS THAN 80" OR MORE THAN 96" ABOVE THE FINISHED FLOOR OR NOT MORE THAN 6" BELOW THE CEILING, WHICHEVER IS LOWER
	FIRE ALARM CLEAR (WHITE) STROBE ONLY - WALL MOUNTED WITH THE ENTIRE STROBE LENS NOT LESS THAN 80" OR MORE THAN 96" ABOVE THE FINISHED FLOOR OR NOT MORE THAN 6" BELOW THE CEILING, WHICHEVER IS LOWER
	COMBINATION FIRE ALARM HORN AND SINGLE CLEAR (WHITE) STROBE APPLIANCE - CEILING MOUNTED
	FIRE ALARM STROBE ONLY - CEILING MOUNTED
	SPRINKLER SYSTEM ALARM BELL (24 VOLTS D.C.)
	DOOR HOLDER
FSD	FIRE / SMOKE DAMPER
	TRANSMITTER ANTENNA

MISCELLANEOUS

SYMBOL	DESCRIPTION
1 / A	MECHANICAL EQUIPMENT CONNECTION - "1" INDICATES MECHANICAL EQUIPMENT TYPE AND "A" INDICATES THE MECHANICAL EQUIPMENT IDENTIFICATION.
1	CONSTRUCTION NOTES
1	RISER NOTES
J	JUNCTION BOX
F	F INDICATES FIXED TEMPERATURE TYPE
FA	FA INDICATES FIRE ALARM
SD	SD INDICATES SUPPLY DUCT
RD	RD INDICATES RETURN DUCT
S	S INDICATES SURFACE MOUNT BACK BOX
W	W INDICATES WEATHERPROOF DEVICE

FIRE ALARM SYSTEM FLOOR PLAN GENERAL NOTES

1. **BCE FIRE ALARM SYSTEM CONTRACT DRAWINGS ARE NOT A COMPLETE DESIGN OR 100% LAYOUT AND ARE SIMPLY CONCEPTUAL. THIS LAYOUT IDENTIFIES PROPOSED LOCATIONS OF DEVICES AND KEY CRITICAL ASPECTS OF THE FIRE ALARM SYSTEM. THEY ARE MEANT TO PROVIDE A GUIDE FOR COORDINATING ARCHITECTURAL, ELECTRICAL, AND MECHANICAL FEATURES OF THE BUILDING DESIGN AND TO AID THE NICET DESIGNER IN CREATING SHOP DRAWINGS IN ACCORDANCE WITH NFPA 72, STATE & LOCAL REQUIREMENTS. THE CONTRACTORS AND THE FIRE ALARM SYSTEM DESIGNER SHALL COORDINATE THE EXACT QUANTITIES AND LOCATIONS OF ALL SYSTEM COMPONENTS BETWEEN TRADES AND/OR EXISTING CONDITIONS.**
2. PROVIDE ALL MATERIALS, EQUIPMENT, LABOR, DESIGN AND PROGRAMMING FOR A COMPLETE, INTELLIGENT (ANALOG) AND ADDRESSABLE (DIGITAL) LOW VOLTAGE 24 VOLT D.C., FULLY OPERATIONAL FIRE ALARM SYSTEM. ALL EQUIPMENT PROVIDED FOR THIS PROJECT SHALL BE NEW, CURRENTLY MANUFACTURED, AND SHALL BE DELIVERED TO THE PROJECT SITE WITH THE ORIGINAL FACTORY SEAL INTACT. MATERIALS AND WORKMANSHIP SHALL FULLY COMPLY WITH THE REQUIREMENTS OF THE LATEST EDITION OF THE NATIONAL ELECTRICAL CODE (N.F.P.A. #70), NATIONAL FIRE ALARM AND SIGNALING CODE (N.F.P.A. #72), AND THE LAWS AND REGULATIONS OF WASHINGTON STATE.
3. THE INITIATION DEVICES, NOTIFICATION APPLIANCES, HEAD END EQUIPMENT, ETC. SHOWN ON THESE CONTRACT DOCUMENTS ARE TO ASSIST THE FIRE ALARM CONTRACTOR IN THE DESIGN OF THE FIRE ALARM SYSTEM. ALL REQUIRED DEVICES MAY NOT BE INDICATED AND WILL BE THE RESPONSIBILITY OF THE FIRE ALARM CONTRACTOR TO PROVIDE.
4. COORDINATE EXACT LOCATIONS AND MOUNTING HEIGHTS OF ALL WALL MOUNTED DEVICES WITH ARCHITECTURAL ELEVATIONS.
5. CORE DRILLED HOLES SHALL NOT PENETRATE THROUGH ANY STRUCTURAL BEAMS, REBAR CONCRETE SLABS, AND / OR WALLS THAT MAY COMPROMISE THE STRUCTURAL INTEGRITY OF THE BUILDING.
6. WHEN PENETRATING FIRE RATED WALLS, FLOORS, OR CEILINGS, THE CONTRACTOR SHALL UTILIZE APPROVED FIRE RATED PENETRATION METHODS. THE FIRE RATING OF THE WALLS, FLOORS, OR CEILINGS SHALL BE MAINTAINED AFTER THE CONDUIT HAS BEEN INSTALLED.
7. PRIOR TO ROUGH-IN, COORDINATE EXACT LOCATIONS OF FIRE ALARM APPLIANCES AND DEVICES WITH THE GENERAL ELECTRICAL, MECHANICAL, AND FIRE PROTECTION CONTRACTORS.
8. THE GENERAL CONTRACTOR AND FIRE ALARM SYSTEM CONTRACTOR SHALL COORDINATE ALL CUTTING, PATCHING AND FINISH WORK.
9. ALL MANUAL PULL STATIONS SHALL BE DUAL ACTION, KEY OPERABLE. THE USE OF BREAK GLASS FRONT STATIONS ARE NOT ALLOWED.
8. EACH NEW WATER FLOW SWITCH, PRESSURE SWITCH, OR TAMPER SWITCH SHALL HAVE A SEPARATE AND UNIQUE ADDRESS.
9. UNLESS OTHERWISE NOTED IN THESE DRAWINGS, THE BASIS FOR THE VISUAL NOTIFICATION APPLIANCES (STROBES) INDICATED ON THE CONTRACT DOCUMENTS IS THE UTILIZATION OF (75) CANDELA (C.D.) AT A 44'-0" X 44'-0" SPACING FOR CEILING MOUNTED APPLIANCES AND 45'-0" X 45'-0" SPACING FOR WALL MOUNTED APPLIANCES. IF THE FIRE ALARM SYSTEM CONTRACTOR DECIDES TO INSTALL LOWER OUTPUT VISUAL APPLIANCES, IT BECOMES THE RESPONSIBILITY OF THE FIRE ALARM SYSTEM CONTRACTOR TO MEET THE MINIMUM CANDELA (C.D.) RATING AT THE LISTED MAXIMUM ROOM SIZE INDICATED IN TABLE 18.5.5.4.1(A) FOR WALL MOUNTED VISIBLE APPLIANCES OR TABLE 18.5.5.4.1(B) FOR CEILING MOUNTED VISIBLE APPLIANCES IN THE 2013 EDITION OF N.F.P.A. #72.
10. ALL ADDRESSABLE DEVICES AND DETECTOR BASES SHALL BE PERMANENTLY AND CLEARLY LABELED WITH THE DEVICE ADDRESS IN A READILY VISIBLE LOCATION DIRECTLY ON THE DEVICE.

FIRE ALARM SYSTEM EQUIPMENT REQUIREMENTS

1. THE FIRE ALARM SYSTEM SHALL BE FULLY FUNCTIONAL WITHOUT THE USE OF PRIMARY POWER. THE FIRE ALARM SYSTEM SHALL BE PROVIDED WITH A MINIMUM OF 24 HOURS OF STANDBY OPERATION FOLLOWED BY AN ADDITIONAL 5 MINUTES OF ALARM OPERATION.
2. ALL BATTERIES SHALL PROVIDE AT LEAST 25% SPARE CAPACITY.
3. THE FIRE ALARM SYSTEM CONTROL PANEL (FACP) MAY INCLUDE INTERNAL POWER SUPPLIES. THE FIRE ALARM SYSTEM POWER SUPPLIES (FAPS) ARE SHOWN FOR REFERENCE ONLY. PROVIDE ADDITIONAL QUANTITIES OF POWER SUPPLIES AS REQUIRED FOR A COMPLETE AND FULLY FUNCTIONAL SYSTEM. THE FIRE ALARM SYSTEM CONTRACTOR SHALL BE RESPONSIBLE FOR COORDINATING WITH THE ELECTRICAL CONTRACTOR FOR ALL POWER CONNECTIONS THE FIRE ALARM SYSTEM CONTRACTOR SHALL BE RESPONSIBLE FOR THE ELECTRICAL COSTS ASSOCIATED WITH ALL NON-COORDINATED POWER CONNECTIONS.
4. PROVIDE 25% SPARE CAPACITY FOR NOTIFICATION POWER SUPPLIES.
5. PROVIDE MULTIPLE INITIATING DEVICE CIRCUITS AND SIGNALING LINE CIRCUITS SO THAT FAILURE OF ONE CIRCUIT DOES NOT CAUSE THE FACILITY TO LOSE OVER 50% OF ITS DETECTION CAPABILITY PER FLOOR.
6. PROVIDE A MINIMUM OF 2 ISOLATION MODULES PER CIRCUIT. EACH CIRCUIT SHALL HAVE A MAXIMUM OF 20 DEVICES PER ISOLATION MODULE.
7. PROVIDE BATTERY CALCULATIONS FOR ALL FIRE ALARM SYSTEMS.
8. PROVIDE AUDIO AMPLIFIERS, SWITCHES, AND OTHER APPURTENANCES, AS REQUIRED.
9. PROVIDE AUDIO AMPLIFIER WITH 50% SPARE CAPACITY FOR VOICE NOTIFICATION
10. AMPLIFIER CIRCUITS SHALL BE LOADED TO NO MORE THAN 75% OF RATED CONTINUOUS CAPACITY WHEN PRODUCING SOUND LEVELS AS REQUIRED BY N.F.P.A. #72 AGAINST NORMAL AMBIENT BACKGROUND NOISE LEVELS.

FIRE ALARM SYSTEM CABLING AND CONDUIT REQUIREMENTS

1. ALL INITIATING AND NOTIFICATION CIRCUITS SHALL BE "CLASS B" WIRING.
2. ALL "CLASS B" WIRING CIRCUITS SHALL BE PROVIDED WITH AN "END-OF-LINE" RESISTOR INSTALLED AT THE END OF EACH CIRCUIT.
3. THE USE OF T-TAPPING WILL BE ALLOWED ON S.L.C. (SIGNALING LINE CIRCUIT) CIRCUITS ONLY. T-TAPPING IS NOT ALLOWED ON ANY CIRCUIT REQUIRING AN END OF LINE RESISTOR.
4. ALL WIRE TERMINATIONS SHALL BE BY USE OF WIRE NUTS OR SCREW TYPE TERMINATION BLOCKS.
5. THE USE OF CRIMPED CONNECTORS, TWISTING OF WIRES, ETC. SHALL NOT BE ALLOWED IN J-BOXES, TERMINAL CABINETS, OR ENCLOSURES.
6. ALL WIRES OUTSIDE OF J-BOXES, TERMINAL CABINETS, OR ENCLOSURES SHALL BE FREE OF SPLICES.
7. CONDUITS SHALL BE CONCEALED IN CEILING SPACES, WALLS, AND OTHER AREAS WHEREVER POSSIBLE.
8. ALL CONDUIT SHALL BE INSTALLED IN A PARALLEL OR PERPENDICULAR FASHION THAT IS TIGHT TO STRUCTURE. THE CONTRACTOR SHALL COORDINATE ALL CONDUIT ROUTING WITH OTHER TRADES.
9. FIRE ALARM CABLING INSTALLED ABOVE ACCESSIBLE CEILINGS SHALL BE ALLOWED TO BE INSTALLED AS OPEN CABLING. PROVIDE "D" RING HANGER FOR ALL OPEN CABLING AT A MAXIMUM SPACING OF 5'-0" ON CENTER.
10. CABLING THAT IS INSTALLED IN WALLS, CABLING THAT IS INSTALLED BELOW 8'-0" IN ELEVATION THAT IS SUBJECT TO DAMAGE, AND CABLING THAT IS INSTALLED ABOVE INACCESSIBLE CEILINGS SHALL BE INSTALLED IN CONDUIT.
11. CONDUITS PASSING THROUGH BUILDING EXPANSION JOINTS OR BUILDING SEISMIC JOINTS SHALL HAVE JUNCTION BOXES AT EACH SIDE OF THE EXPANSION / SEISMIC JOINT. PROVIDE SECTION OF FLEXIBLE CONDUIT BETWEEN JUNCTION BOXES AND GROUNDING BUSHINGS WITH #12 GROUNDING CABLE TO MAINTAIN CONTINUITY BETWEEN ALL (2) JUNCTION BOXES. PROVIDE FLEX CONDUIT AND GROUNDING CABLE OF SUFFICIENT LENGTH TO ACCOMMODATE THE CALCULATED BUILDING MOVEMENT PLUS 6" OF ADDITIONAL MOVEMENT. PROVIDE QUANTITIES AS REQUIRED.
12. ALL EXPOSED SURFACE MOUNTED RACEWAYS IN FINISHED SPACES BELOW 8'-0" IN ELEVATION SHALL BE A MINIMUM OF SERIES 700 METAL WIREMOLD OR EQUAL. THE INSTALLATION OF EXPOSED ELECTRICAL METALLIC TUBING (EMT) IN FINISHED SPACES BELOW 8'-0" IN ELEVATION WILL NOT BE ALLOWED.
13. CONDUITS SHALL NOT EXCEED FILL RATING OF 40% AS DEFINED BY THE LATEST ADOPTED EDITION OF THE NATIONAL ELECTRICAL CODE (N.F.P.A. #70). PROVIDE SIZES AND QUANTITIES AS REQUIRED.
14. WHERE EXPOSED TO VIEW IN FINISHED SPACES, PAINT ALL NEW CONDUITS, MOUNTING HARDWARE, AND RACEWAYS TO MATCH THE ADJACENT SURFACES.
15. ALL NEW FIRE ALARM SYSTEM JUNCTION BOXES SHALL BE PAINTED RED AND ANNOTATED "FIRE ALARM POWER LIMITED" ON THE COVER IN BLACK BOLD PRINT HAVING MINIMUM CHARACTER FONT SIZE ¼" TALL X ¼" WIDE.

FIRE ALARM SYSTEM AUDIBILITY REQUIREMENTS

1. THE FIRE ALARM SYSTEM CONTRACTOR SHALL PERFORM AUDIBILITY TESTING IN EACH SPACE OF THE BUILDING PRIOR TO ACCEPTANCE TESTING. DOCUMENTATION OF DECIBEL (dB) VALUES RECORDED IN ALL SPACES SHALL BE PROVIDED TO THE ARCHITECT / ENGINEER PRIOR TO ACCEPTANCE TESTING.
   - A. DECIBEL READINGS SHALL BE TAKEN AT A POINT 10'-0" FROM THE APPLIANCE AT AN ELEVATION OF 5'-0" ABOVE FINISHED FLOOR.
   - B. THE SOUND LEVEL SHALL BE A MINIMUM OF 15 DECIBELS (dBs) ABOVE THE AVERAGE AMBIENT SOUND LEVEL.
   - C. THE SOUND LEVEL SHALL BE A MAXIMUM OF 30 DECIBELS (dBs) ABOVE THE AVERAGE AMBIENT SOUND LEVEL.
   - D. THE SOUND LEVEL SHALL BE A MINIMUM OF 5 DECIBELS (dBs) ABOVE THE MAXIMUM SOUND LEVEL HAVING A MINIMUM DURATION OF 60 SECONDS.
   - E. IN SPACES THAT DO NOT MEET THE MINIMUM AUDIBLE (dB) VALUES, THE FIRE ALARM SYSTEM CONTRACTOR SHALL PROVIDE ADDITIONAL AUDIBLE NOTIFICATION APPLIANCES UNTIL THE MINIMUM DECIBEL (dB) VALUES ARE OBTAINED.

bcra
T 253.627.4367 F 253.627.4395 WWW.BCRADESIGN.COM
2106 PACIFIC AVENUE, SUITE 300, TACOMA, WA 98402

SEAL

PROJECT
PORT OF EVERETT
WINE WALK BUILDING A12
XXXX SEINER DRIVE
EVERETT, WASHINGTON 98201

REVISIONS

DATE
12.13.2023

BCRA NO.
23045.00.00

DRAWN BY:

REVIEWED BY:

SHEET TITLE
FIRE ALARM SYSTEM LEGEND AND NOTES

bcra
© COPYRIGHT 2023 - BCRA, INC. ALL RIGHTS RESERVED

SHEET
FA001

100% DESIGN DEVELOPMENT

22x34 6/9/2023 1:12:43 PM

IF SHEET MEASURES LESS THAN 22"X34", IT IS A REDUCED PRINT. REDUCE SCALE ACCORDINGLY

SEQUENCE OF OPERATION

FIRE ALARM SYSTEM TRANSMITTER ZONE SCHEDULE	
ZONE #	DESCRIPTION
1	COMMON ALARM
2	COMMON TROUBLE
3	WATER FLOW ALARM
4	TAMPER SWITCH SUPERVISORY SIGNAL
5	SPARE
6	SPARE
7	SPARE
8	SPARE

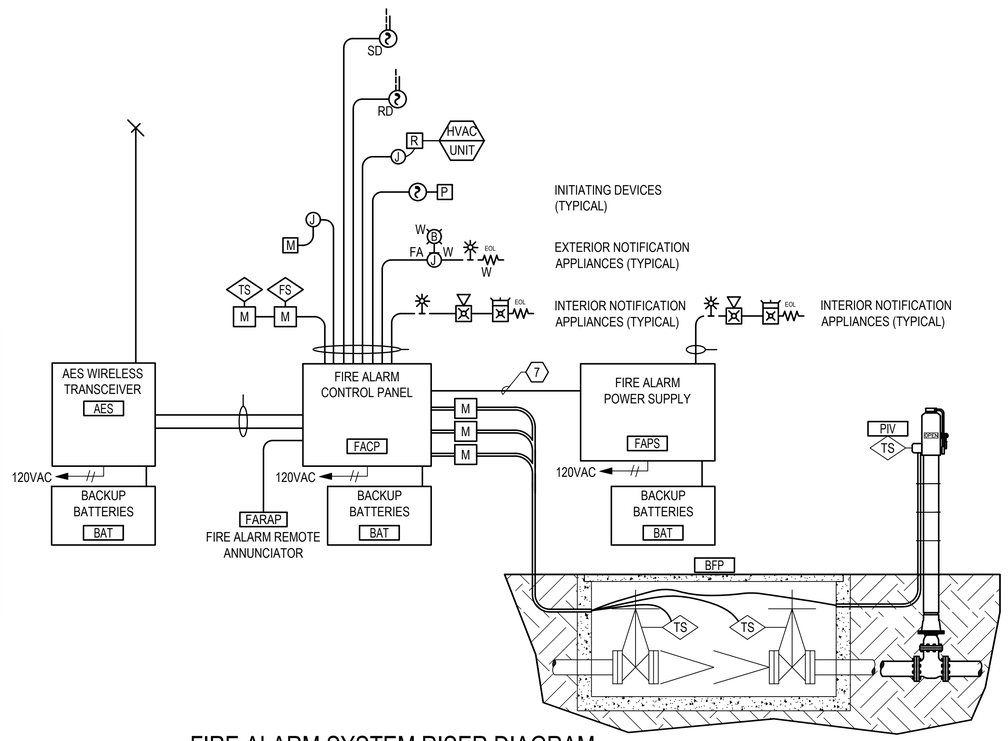

FIRE ALARM SYSTEM RISER DIAGRAM

DIAGRAMMATIC

22x34 6/9/2023 1:12:43 PM

bcra
T 253.627.4367 F 253.627.4395 WWW.BCRADESIGN.COM
2106 PACIFIC AVENUE, SUITE 300, TACOMA, WA 98402

SEAL

PROJECT
PORT OF EVERETT
WINE WALK BUILDING A12
XXXX SEINER DRIVE
EVERETT, WASHINGTON 98201

REVISIONS

DATE
12.13.2023

BCRA NO.
23045.00.00

DRAWN BY:

REVIEWED BY:

SHEET TITLE
FIRE ALARM SYSTEM RISER AND SEQUENCE OF OPERATIONS MATRIX

bcra

© COPYRIGHT 2023 - BCRA, INC. ALL RIGHTS RESERVED

SHEET

FA002

100% DESIGN DEVELOPMENT

IF SHEET MEASURES LESS THAN 22"X34", IT IS A REDUCED PRINT. REDUCE SCALE ACCORDINGLY

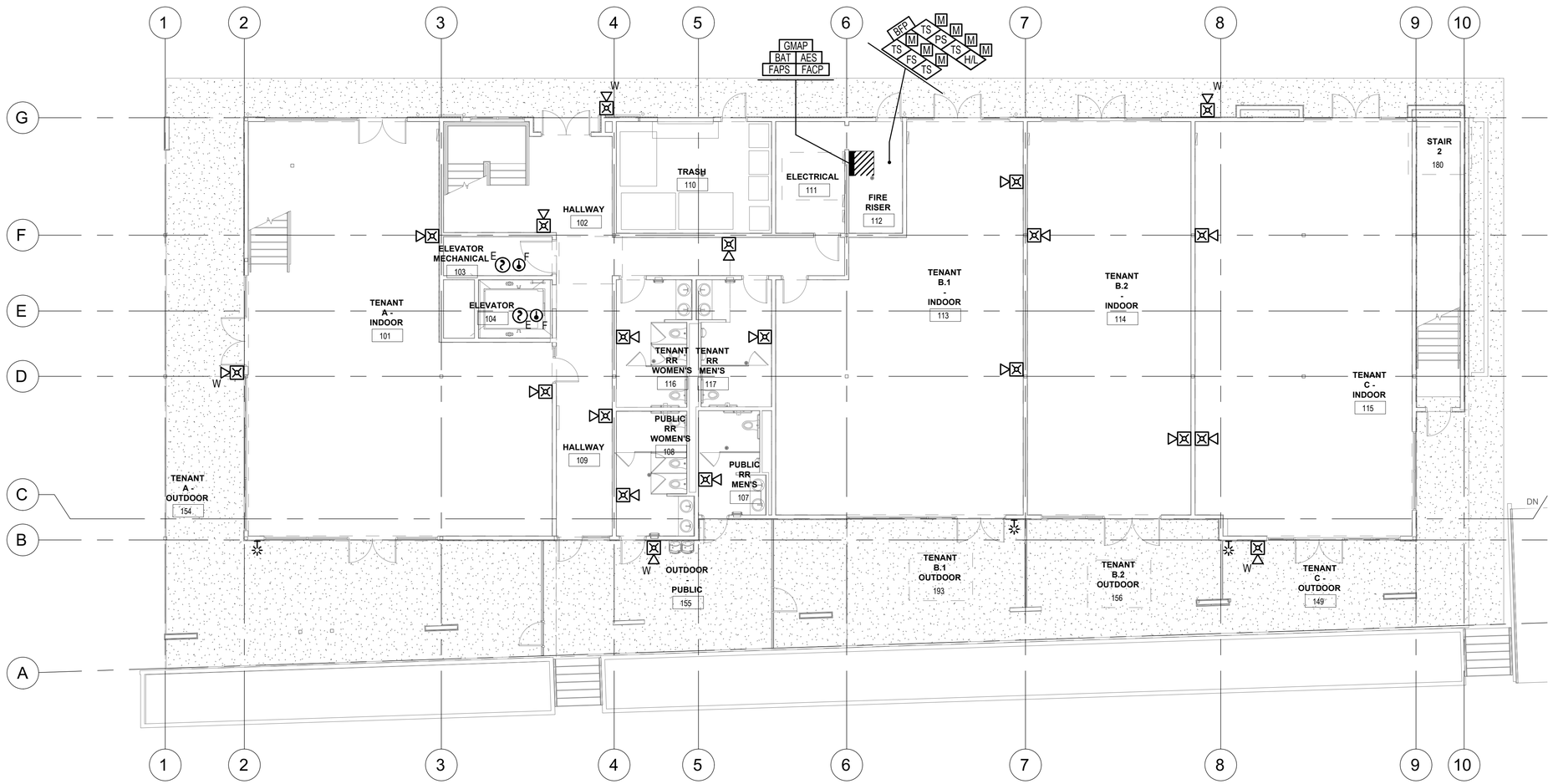

1 FIRE ALARM SYSTEM PLAN - FIRST FLOOR

1/8" = 1'-0"

TRUE NORTH

0 4 8 16

SCALE: 1/8" = 1'-0"

GENERAL NOTES

1. SEE SHEET FA-001 FOR FIRE ALARM SYSTEM EQUIPMENT REQUIREMENTS, AUDIBILITY REQUIREMENTS, FLOOR PLAN GENERAL NOTES, , CABLING AND CONDUIT REQUIREMENTS, SYSTEM SEQUENCE OF OPERATIONS AND RISER DIAGRAM.

2. CEILING TYPES ARE SHOWN FOR REFERENCE ONLY AND ARE NOT PROVIDED TO INDICATE EXACT LAYOUTS.

3. CEILING MOUNTED DEVICES SHALL BE INSTALLED AT THE QUARTER POINT OR CENTER POINT OF 4'X2' ACOUSTICAL CEILING TILES AND CENTER POINT OF 2'X2' OR 1'X1' ACOUSTICAL CEILING TILES. FA SHEETS MAY NOT DEPICT THIS INSTALLATION DUE TO REFLECTED CEILING PLAN SHOWN BEING DIAGRAMMATICAL TO INDICATE CEILING TYPES, NOT EXACT ACOUSTICAL TILE LAYOUTS.

4. THE FIRE ALARM SYSTEM CONTRACTOR SHALL COORDINATE THE FIRE ALARM SYSTEM INSTALLATION WITH ARCHITECTURAL FEATURES, H.V.A.C. GRILLES, ELECTRICAL LIGHTS, FIRE PROTECTION SPRINKLER HEADS, AND/OR EXISTING CONDITIONS.

bcra
T 253.627.4367 F 253.627.4395 WWW.BCRADESIGN.COM
2106 PACIFIC AVENUE, SUITE 300, TACOMA, WA 98402

SEAL

PROJECT
PORT OF EVERETT
WINE WALK BUILDING A12
XXXX SEINER DRIVE
EVERETT, WASHINGTON 98201

REVISIONS

DATE
12.13.2023

BCRA NO.
23045.00.00

DRAWN BY:

REVIEWED BY:

SHEET TITLE
FIRE ALARM SYSTEM PLAN - FIRST FLOOR

bcra
© COPYRIGHT 2023 - BCRA, INC. ALL RIGHTS RESERVED

SHEET
FA101

100% DESIGN DEVELOPMENT

IF SHEET MEASURES LESS THAN 22"X34", IT IS A REDUCED PRINT. REDUCE SCALE ACCORDINGLY

22x34 6/9/2023 1:12:43 PM

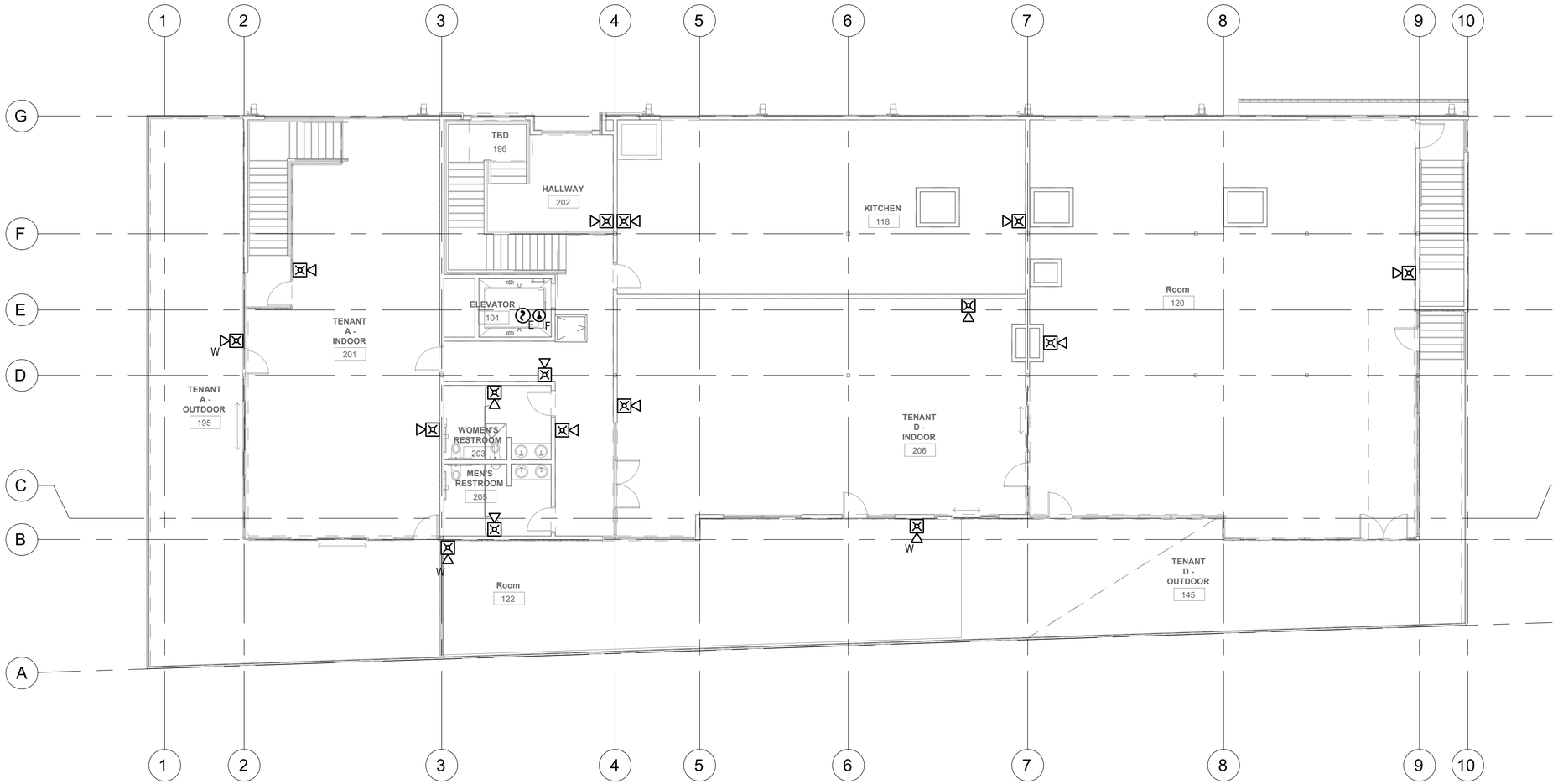

1 FIRE ALARM SYSTEM PLAN - SECOND FLOOR

1/8" = 1'-0"

TRUE NORTH

0 4 8 16

SCALE: 1/8" = 1'-0"

GENERAL NOTES

1. SEE SHEET FA-001 FOR FIRE ALARM SYSTEM EQUIPMENT REQUIREMENTS, AUDIBILITY REQUIREMENTS, FLOOR PLAN GENERAL NOTES, , CABLING AND CONDUIT REQUIREMENTS, SYSTEM SEQUENCE OF OPERATIONS AND RISER DIAGRAM.

2. CEILING TYPES ARE SHOWN FOR REFERENCE ONLY AND ARE NOT PROVIDED TO INDICATE EXACT LAYOUTS.

3. CEILING MOUNTED DEVICES SHALL BE INSTALLED AT THE QUARTER POINT OR CENTER POINT OF 4'X2' ACOUSTICAL CEILING TILES AND CENTER POINT OF 2'X2' OR 1'X1' ACOUSTICAL CEILING TILES. FA SHEETS MAY NOT DEPICT THIS INSTALLATION DUE TO REFLECTED CEILING PLAN SHOWN BEING DIAGRAMMATICAL TO INDICATE CEILING TYPES, NOT EXACT ACOUSTICAL TILE LAYOUTS.

4. THE FIRE ALARM SYSTEM CONTRACTOR SHALL COORDINATE THE FIRE ALARM SYSTEM INSTALLATION WITH ARCHITECTURAL FEATURES, H.V.A.C. GRILLES, ELECTRICAL LIGHTS, FIRE PROTECTION SPRINKLER HEADS, AND/OR EXISTING CONDITIONS.

bcra
T 253.627.4367 F 253.627.4395 WWW.BCRADESIGN.COM
2106 PACIFIC AVENUE, SUITE 300, TACOMA, WA 98402

SEAL

PROJECT
PORT OF EVERETT
WINE WALK BUILDING A12
XXXX SEINER DRIVE
EVERETT, WASHINGTON 98201

REVISIONS

DATE
12.13.2023

BCRA NO.
23045.00.00

DRAWN BY:

REVIEWED BY:

SHEET TITLE
FIRE ALARM SYSTEM PLAN - SECOND FLOOR

© COPYRIGHT 2023 - BCRA, INC. ALL RIGHTS RESERVED

SHEET
FA102

100% DESIGN DEVELOPMENT

IF SHEET MEASURES LESS THAN 22"X34", IT IS A REDUCED PRINT. REDUCE SCALE ACCORDINGLY

22x34 6/9/2023 1:12:43 PM

FIRE PROTECTION CONSTRUCTION NOTES

1. THE FIRE PROTECTION SPRINKLER SYSTEM DESIGN SHALL BE BASED UPON NFPA #13 DESIGN CRITERIA FOR LIGHT HAZARD OCCUPANCY.
2. THE FIRE PROTECTION SPRINKLER SYSTEM DESIGN SHALL BE BASED UPON NFPA #13 DESIGN CRITERIA FOR ORDINARY HAZARD GROUP I OCCUPANCY.
3. THE FIRE PROTECTION SPRINKLER SYSTEM DESIGN SHALL BE BASED UPON NFPA #13 DESIGN CRITERIA FOR ORDINARY HAZARD GROUP II OCCUPANCY.
4. SEE ENLARGED FIRE PROTECTION RISER DETAIL ON SHEET FX002 FOR ADDITIONAL NOTES.
5. THE FIRE ALARM CONTRACTOR SHALL PROVIDE A 24 VOLT D.C. ELECTRIC BELL MOUNTED TO THE EXTERIOR OF THE BUILDING AND POWERED THROUGH THE FIRE ALARM PANEL.
6. 4" UNDERGROUND COMBINED DOMESTIC/FIRE PROTECTION SUPPLY PIPING. SEE CIVIL DRAWINGS FOR PIPING CONTINUATION AND DEVICES TO BE INSTALLED IN THE YARD.
7. PROVIDE SPRINKLER HEAD GUARDS FOR ALL SPRINKLERS ON ALL EXPOSED PIPING INSTALLED AT AN ELEVATION LESS THAN 8'-0" OR IN AREAS SUBJECT TO MECHANICAL DAMAGE. HEAD GUARDS SHALL BE SPECIFICALLY LISTED FOR THE SPRINKLER HEADS IN WHICH THEY ARE INSTALLED.
8. PROVIDE SPRINKLER PROTECTION BENEATH ALL EXTERIOR OVERHANGS AND CANOPIES THAT EXCEED 4'-0" IN DEPTH IN WHICH ANY MEMBER THAT COMPRISES THE EXTERIOR OVERHANG AND CANOPY IS OF COMBUSTIBLE CONSTRUCTION, NOT JUST THE EXPOSED SURFACE OR WHERE EXTERIOR OVERHANGS AND CANOPIES EXCEED 2'-0" IN DEPTH AND THE AREA UNDERNEATH IS USED FOR THE STORAGE OF COMBUSTIBLES REGARDLESS OF THE CONSTRUCTION TYPE.
9. SPRINKLER PROTECTION IS NOT REQUIRED BENEATH EXTERIOR OVERHANGS AND CANOPIES TOTALLY COMPRISED OF NONCOMBUSTIBLE OR LIMITED COMBUSTIBLE CONSTRUCTION AND THE AREA UNDERNEATH IS ESSENTIALLY RESTRICTED TO PEDESTRIAN USE.
10. CONCEPTUAL LOCATION FOR AN AUTOMATIC AIR VENT AND ISOLATION CONTROL VALVE. THE FIRE PROTECTION SPRINKLER SYSTEM CONTRACTOR SHALL DETERMINE THE EXACT LOCATION OF BOTH COMPONENTS BASED UPON THE PIPING LAYOUT INDICATED ON THE CONTRACTOR'S SHOP DRAWINGS.
11. THE FIRE PROTECTION SPRINKLER CONTRACTOR SHALL PROVIDE 1" OUTLETS IN A SYMMETRICAL PATTERN THAT DOES NOT EXCEED 100 SQUARE FEET IN THE UNLEASED TENANT SPACES AND OPEN OFFICE AREAS. THE OUTLETS SHALL BE PROVIDED WITH EITHER PLUGS OR 1"X½" BUSHINGS AND UPRIGHT SPRINKLER HEADS. THE 1" OUTLETS SHALL BE USED FOR DROPS TO FUTURE PENDENT SPRINKLER HEADS PLACED WITHIN NEW LOWERED CEILINGS.
12. PROVIDE SPRINKLER PROTECTION BENEATH STAIRS OF COMBUSTIBLE CONSTRUCTION OR UNDER NON-COMBUSTIBLE STAIRS IN WHICH THE AREA IS USED FOR STORAGE.
13. LOCATION FOR THE CONTROL VALVE LOOP TO SERVE BOTH THE SPRINKLER LOCATED IN THE ELEVATOR MACHINE ROOM AND THE SPRINKLER LOCATED AT THE BOTTOM OF THE ELEVATOR SHAFT.
14. SPRINKLER PROTECTION IS REQUIRED AT THE BOTTOM OF THE ELEVATOR SHAFT DUE TO COMBUSTIBLE HYDRAULIC FLUID BEING UTILIZED.

FLOW TEST INFORMATION

BASE HYDRAULIC CALCULATIONS FOR THE BID ON A COMPUTER GENERATED FLOW TEST PERFORMED ON NOVEMBER 15, 2022 BY THE CITY OF EVERETT PUBLIC WORKS DEPARTMENT.

AFTER AWARD OF THE PROJECT, THE CONTRACTOR SHALL VERIFY AVAILABLE WATER SUPPLY WITH A FLOW TEST PERFORMED WITHIN SIX MONTHS OF BID DATE. SEE PROJECT SPECIFICATIONS FOR MORE DETAIL.

TEST HYDRANT

STATIC PRESSURE:	99 PSI
RESIDUAL PRESSURE:	81 PSI
RESIDUAL FLOW:	2,687 GPM

TEST HYDRANT IS LOCATED APPROXIMATELY 165FT SOUTH OF THE INTERSECTION OF SEINER DR AND 14TH STREET AT AN ELEVATION OF 9.01 FT

TEST INFORMATION PROVIDED BY CITY OF EVERETT PUBLIC WORKS DEPARTMENT ON JUNE 26TH, 2023 VIA EMAIL.

FIRE PROTECTION GENERAL NOTES

1. GENERAL CONTRACTOR SHALL COORDINATE ALL SHORT TERM SCHEDULES WITH OWNER PRIOR TO COMMENCING WORK.
2. THE FIRE PROTECTION SPRINKLER SYSTEM CONTRACTOR SHALL TAKE INTO ACCOUNT THE CONFIGURATION OF THE AREA BEING PROTECTED AND SHALL LAYOUT THE SPRINKLER HEAD LOCATIONS TO BE SYMMETRICALLY SPACED.
3. COORDINATE SPRINKLER LOCATIONS IN ACOUSTICAL CEILING TILES AND GYPSUM WALLBOARD CEILINGS WITH THE ARCHITECTURAL DRAWINGS FOR CEILING LOCATIONS AND HEIGHTS, MECHANICAL DRAWINGS FOR HVAC DIFFUSER LOCATIONS, AND ELECTRICAL DRAWINGS FOR CEILING GRID LAYOUT, LIGHT LOCATIONS, AND FIRE ALARM DEVICES.
4. ALL PIPING IN FINISHED AREAS SHALL BE INSTALLED CONCEALED ABOVE THE CEILING SPACE UNLESS SPECIFICALLY NOTED OTHERWISE. ANY PORTION OF THE SPRINKLER SYSTEM INSTALLED EXPOSED THAT IS NOT INDICATED ON THESE DOCUMENTS SHALL BE ADDRESSED IN WRITING WITH SKETCHES (PRIOR TO THE PIPING BEING FABRICATED OR INSTALLED) TO THE ARCHITECT AND ENGINEER TO EVALUATE.
5. ALL SPRINKLER BRANCH LINES SHALL BE RESTRAINED AGAINST EXCESSIVE MOVEMENT PER NFPA #13 AND PROJECT SPECIFICATIONS.
6. THE FIRE PROTECTION SPRINKLER SYSTEM PIPING SHALL BE INSTALLED TO MINIMIZE PIPING OFFSETS IN ROOMS OF EXPOSED STRUCTURE. PIPING SHALL BE INSTALLED AS TIGHT TO STRUCTURE AS POSSIBLE AND SHALL BE INSTALLED TO MINIMIZE VISUAL IMPACTS.
7. AUXILIARY DRAINS LOCATED IN FINISHED AREAS SHALL BE PLACED WITHIN A LOCKABLE ACCESS PANEL. SEE PROJECT SPECIFICATIONS FOR MORE INFORMATION.
8. ALL INSPECTOR'S TEST VALVES PLACED AT THE REMOTE PART OF THE SPRINKLER SYSTEM SHALL TERMINATE ON THE EXTERIOR OF THE BUILDING UNLESS OTHERWISE NOTED. INSPECTOR'S TEST VALVES LOCATED IN FINISHED AREAS SHALL BE PLACED WITHIN A LOCKABLE ACCESS PANEL. SEE PROJECT SPECIFICATIONS FOR MORE INFORMATION.
9. NFPA #70 (NATIONAL ELECTRICAL CODE) REQUIRES A DEDICATED SPACE OF 6'-0" ABOVE ALL ELECTRICAL PANELS, TRANSFORMERS, SWITCHGEARS, ETC. NO PIPING, DUCTS, OR OTHER EQUIPMENT FOREIGN TO THE ELECTRICAL INSTALLATION SHALL BE LOCATED IN THIS ZONE PER SECTION 110.26(E)(1)(a). ALL SPRINKLER PIPING THAT IS NOT COORDINATED TO AVOID THESE AREAS SHALL BE MODIFIED AND RELOCATED AT THE FIRE PROTECTION SPRINKLER CONTRACTOR EXPENSE.
10. THE FIRE PROTECTION SPRINKLER SYSTEM CONTRACTOR SHALL PROVIDE INTERMEDIATE TEMPERATURE SPRINKLERS FOR ALL LOCATIONS REQUIRED BY NFPA #13 TO BE OF ORDINARY TEMPERATURE RATING, THEREBY REDUCING THE NECESSITY FOR MULTIPLE TEMPERATURE RATINGS OF SPRINKLER HEADS TO BE INSTALLED.
11. ALL SPRINKLERS INSTALLED IN FINISHED OCCUPIED AND PUBLIC AREAS WITH ACOUSTICAL TILE OR GYPSUM WALLBOARD CEILINGS SHALL BE WHITE FINISHED SEMI-RECESSED STYLE WITH A WHITE FINISH ESCUTCHEON UNLESS NOTED OTHERWISE.
12. ALL SPRINKLERS INSTALLED IN FINISHED OCCUPIED AND PUBLIC AREAS WITH SURFACE MOUNTED LIGHT FIXTURES UNDER GYPSUM WALLBOARD CEILINGS WHERE CEILING OBSTRUCTION RULES CANNOT BE ACCOMMODATED SHALL BE WHITE FINISHED PENDENT STYLE WITH A WHITE FINISH 2-PIECE ESCUTCHEON UNLESS NOTED OTHERWISE.
13. ALL HORIZONTAL SIDEWALL STYLE SPRINKLER HEADS INSTALLED IN FINISHED OCCUPIED AND PUBLIC AREAS SHALL BE WHITE FINISHED SEMI-RECESSED STYLE WITH A WHITE FINISHED ESCUTCHEON UNLESS NOTED OTHERWISE.
14. ALL PENDENT STYLE CONCEALER SPRINKLER HEADS SHALL BE BRONZE FINISHED WITH WHITE FINISHED ESCUTCHEON PLATES THAT ARE FLAT IN PROFILE. ESCUTCHEON PLATES THAT ARE DOMED IN PROFILE WILL NOT BE ALLOWED.
15. ALL SPRINKLERS INSTALLED IN ROOMS WITH EXPOSED CEILINGS SHALL BE BRONZE FINISHED UPRIGHTS UNLESS NOTED OTHERWISE.
16. SPRINKLERS LOCATED IN ACOUSTICAL CEILING TILES SHALL BE INSTALLED IN A CONSISTENT PATTERN, CENTERED BOTH DIRECTIONS WITHIN THE CEILING TILES (12" FROM A CEILING GRID), AND PLACED TO AVOID ALL LIGHTS AND AIR DIFFUSER GRILLES.
17. ALL PENDENT SPRINKLERS INSTALLED IN CEILING SYSTEMS THAT ARE HARD PIPED SHALL HAVE A 1" ANNULAR CLEARANCE AROUND THE CEILING SYSTEM PENETRATION THAT WILL ALLOW FREE MOVEMENT OF AT LEAST 1" IN ALL DIRECTIONS. THE CEILING PENETRATION SHALL BE CONCEALED WITH AN OVERSIZED ESCUTCHEON OF THE SAME FINISH AS THE SPRINKLER AND WILL BE PROVIDED BY THE FIRE PROTECTION SPRINKLER SYSTEM CONTRACTOR.
18. THE CONTRACTOR IS ADVISED THERE WILL BE NO PAYMENTS FOR "ENGINEERING" UNTIL THE SUBMITTAL MATERIALS (SHOP DRAWINGS, SEISMIC BRACE CALCULATIONS, HYDRAULIC CALCULATIONS, AND EQUIPMENT SUBMITTALS) HAVE BEEN REVIEWED AND APPROVED BY THE ARCHITECT AND/OR ENGINEER.
19. ALL SPRINKLER SYSTEM COMPONENTS, DEVICES, AND MATERIALS INSTALLED AS PART OF THIS PROJECT SHALL BE NEW.
20. WHERE FIRE SPRINKLER PIPING PENETRATES A FIRE RESISTANCE RATED ASSEMBLY, THE FIRE PROTECTION SPRINKLER SYSTEM CONTRACTOR SHALL PROVIDE AN APPROVED MEANS OF SEALING THE PENETRATION TO MAINTAIN THE INTEGRITY OF THE FIRE RESISTANCE RATED ASSEMBLY.
21. THE HIGH VOLUME LOW SPEED (H.V.L.S.) FAN EXCEEDS 5'-0" IN DIAMETER. THE FIRE PROTECTION SPRINKLER SYSTEM CONTRACTOR SHALL INSTALL (4) SPRINKLERS SYMMETRICALLY SPACED AROUND THE CENTER OF THE HIGH VOLUME LOW SPEED (H.V.L.S.) FAN.
22. PROVIDE HIGH TEMPERATURE (286°F) DRY SEMI-RECESSED PENDENT OR DRY SEMI-RECESSED HORIZONTAL SIDEWALL SPRINKLER(S) IN ANY WALK-IN FREEZERS WITH A MINIMUM "A" DIMENSION OF 18" THAT IS THREADED INTO A TEE FITTING. DRY PENDENT SPRINKLERS ARE NOT ALLOWED TO BE THREADED INTO THREADED COUPLINGS OR THREADED ELBOWS.
23. PROVIDE A DRY SEMI-RECESSED PENDENT OR DRY SEMI-RECESSED HORIZONTAL SIDEWALL SPRINKLER(S) IN ANY WALK-IN COOLERS WITH A MINIMUM "A" DIMENSION OF 12" THAT IS THREADED INTO A TEE FITTING, DRY PENDENT SPRINKLERS ARE NOT ALLOWED TO BE THREADED INTO THREADED COUPLINGS OR THREADED ELBOWS.
24. PROVIDE SPRINKLER PROTECTION BENEATH ANY ROLL BACK GARAGE STYLE DOORS THAT ROLLS BACK MORE THAN 4'-0" INTO THE BUILDING. SPRINKLER PROTECTION SHALL BE BASED UPON THE DESIGN CRITERIA OF THE SPACE CONTAINING THE ROLL BACK GARAGE STYLE DOOR. NFPA #13 ALLOWANCE FOR SPRINKLERS INSTALLED UNDER ROLL BACK GARAGE STYLE DOORS TO BE BASED UPON LIGHT HAZARD OCCUPANCY REQUIREMENTS WILL NOT BE ALLOWED.
25. SPRINKLER PIPING IN EXPOSED AREAS INCLUDING EXTERIOR DRY SYSTEM PIPING SHALL BE LEFT IN A CONDITION SUITABLE FOR PAINTING BY OTHERS, INCLUDING REMOVING LOOSE SURFACE RUST, FABRICATION TAGS, AND ADHESIVE RESIDUE, CUTTING OIL, AND OTHER FOREIGN MATTER THAT MAY PREVENT PAINT FROM ADHERING TO THE SPRINKLER PIPING.
26. HANGERS, BRACING, AND FASTENERS UTILIZED ON EXTERIOR PIPING ARE TO BE FACTORY GALVANIZED FINISHED.

bcra
T 253.627.4367 F 253.627.4395 WWW.BCRADESIGN.COM
2106 PACIFIC AVENUE, SUITE 300, TACOMA, WA 98402

SEAL

PROJECT
PORT OF EVERETT
WINE WALK BUILDING A12
XXXX SEINER DRIVE
EVERETT, WASHINGTON 98201

REVISIONS

DATE 12.13.2023
BCRA NO. 23045.00.00
DRAWN BY: TLC
REVIEWED BY: DAL
SHEET TITLE
FIRE PROTECTION NOTES

© COPYRIGHT 2023 - BCRA, INC. ALL RIGHTS RESERVED

SHEET
FX001

100% DESIGN DEVELOPMENT

22x34 6/9/2023 1:12:43 PM

IF SHEET MEASURES LESS THAN 22"X34", IT IS A REDUCED PRINT. REDUCE SCALE ACCORDINGLY

RISER DETAIL CONSTRUCTION NOTES

1. ALL RISER APPURTENANT PENETRATIONS OF THE FINISHED FLOOR, EXTERIOR WALL, AND NON-FRANGIBLE INTERIOR WALLS TO HAVE A 2" ANNULAR SPACE FOR PIPING 4" AND LARGER IN SIZE AND A 1" ANNULAR SPACE FOR PIPING LESS THAN 4" IN SIZE.
2. UNDERGROUND SUPPLY FLANGE TO BE TWO-HOLED WITH RESPECT TO THE EXTERIOR WALL TO ASSURE THAT THE BACKFLOW PREVENTER IS INSTALLED PARALLEL TO THE INTERIOR WALL.
3. THE FIRE PROTECTION SPRINKLER CONTRACTOR SHALL COMBINE THE MAIN DRAIN DISCHARGE, PRESSURE RELIEF VALVE DISCHARGE, DRIP CUP DISCHARGES, AND THE WET SYSTEM INSPECTORS TEST VALVE DISCHARGE TOGETHER AND ROUTE TO HUB DRAIN.
4. SUPPLY PIPE AND FITTINGS FROM THE FLANGE ABOVE FLOOR TO THE SUPPLY FLANGE OF THE BACKFLOW PREVENTER SHALL MAINTAIN A CLEAN AND RUST FREE POTABLE WATER SYSTEM AND SHALL BE CEMENT LINED DUCTILE IRON PIPING (DIP) CLASS 52 OR OF A TYPE CONTAINED IN THE PROJECT SPECIFICATIONS (BLACK AND GALVANIZED STEEL PIPE IS NOT ALLOWED).
5. UNDERGROUND PIPE TYPE SHALL MAINTAIN A CLEAN AND RUST FREE POTABLE WATER SYSTEM AND SHALL BE DUCTILE IRON PIPING (DIP) CLASS 52 OR OF A TYPE CONTAINED IN THE PROJECT SPECIFICATIONS (BLACK AND GALVANIZED STEEL PIPE IS NOT ALLOWED).
6. FIRE DEPARTMENT CONNECTION PIPING SHALL BE DUCTILE IRON PIPING (DIP) CLASS 52. IF ACCEPTABLE TO THE AUTHORITY HAVING JURISDICTION, GROOVED SCHEDULE 10 GALVANIZED PIPE WITH A 10 MIL CORROSION PROTECTIVE TAPE WRAP OVER AN ASPHALT TYPE PAINTED COATING OR OF A TYPE CONTAINED IN THE PROJECT SPECIFICATIONS MAY BE USED.
7. THE ONLY FITTING ALLOWED UNDER THE BUILDING CONCRETE SLAB IS THE 90° ELBOW THAT TRANSITIONS THE UNDERGROUND PIPING FROM A HORIZONTAL INSTALLATION TO A VERTICAL INSTALLATION, PRIOR TO PENETRATING THE CONCRETE SLAB.
8. PROVIDE A CONCRETE THRUST BLOCK AT THE ELBOW WHERE THE UNDERGROUND PIPING CHANGES FROM A HORIZONTAL INSTALLATION TO A VERTICAL INSTALLATION. THE ELBOW SHALL ALSO BE PROVIDED WITH RODDING AS A SECOND MEANS OF RESTRAINT. THE ELBOW SHALL BE RODDED TO THE FLANGE ABOVE THE FINISHED FLOOR IN THE VERTICAL DIRECTION AND RODDED TO THE FIRST JOINT OUTSIDE OF THE BUILDING FOOTING IN THE HORIZONTAL DIRECTION.
9. PROVIDE A CONCRETE THRUST BLOCK AT THE ELBOW WHERE THE UNDERGROUND PIPING CHANGES DIRECTION.
10. THE RISER DETAIL IS CONCEPTUAL IN NATURE WITH THE MINIMUM QUANTITY AND TYPES OF SPRINKLER SYSTEM RISERS BEING REQUIRED FOR THIS PROJECT. ACTUAL QUANTITY AND TYPES OF SYSTEM RISERS REQUIRED FOR THIS PROJECT SHALL BE DETERMINED BY THE FIRE PROTECTION SPRINKLER SYSTEM CONTRACTOR. IF ADDITIONAL SYSTEM RISERS ARE NECESSARY, THE FIRE PROTECTION SPRINKLER SYSTEM CONTRACTOR SHALL INCLUDE THEM IN THEIR SCOPE OF WORK, PRIOR TO BIDDING.
11. THE PIPING UTILIZED FOR FULL FORWARD FLOW TESTING OF THE BACKFLOW PREVENTER SHALL BE THE SAME SIZE OR LARGER THAN THE SIZE OF THE BACKFLOW PREVENTER.
12. THE FIRE PROTECTION SPRINKLER SYSTEM CONTRACTOR SHALL PROVIDE A MINIMUM OF (1) 2½" HOSE VALVE FOR EACH 250 G.P.M. OF SYSTEM DEMAND.
13. THE FIRE PROTECTION UNDERGROUND SUPPLY PIPING SHALL:
    1. BE INSTALLED A MINIMUM OF 1'-0" BELOW THE BOTTOM OF THE FOUNDATION / FOOTING TO THE TOP OF PIPING PER SECTION 10.6.5 OF NFPA #13 AND NFPA #24.
    2. BE INSTALLED A MAXIMUM DISTANCE OF 10'-0" FROM THE OUTSIDE EDGE OF THE FOUNDATION / FOOTING TO THE CENTERLINE OF THE VERTICAL SUPPLY PIPING PENETRATING THE FLOOR SLAB PER SECTION 10.6.3.1 OF NFPA #13 AND NFPA #24.
14. THE DESIGN OF THE FIRE PROTECTION UNDERGROUND SHALL BE PERFORMED BY A CONTRACTOR HOLDING A LEVEL 3 CONTRACTOR LICENSE PER SECTION 212.80.18(1)(c) OF THE "WASHINGTON ADMINISTRATIVE CODE" (WAC), AND AN INDIVIDUAL HOLDING A LEVEL 3 DESIGN CERTIFICATION PER SECTION 212.80.18(2)(a)(iii) OF THE "WASHINGTON ADMINISTRATIVE CODE" (WAC) OR A PROFESSIONAL ENGINEER, PER SECTION 212.80.15(2)(d) OF THE "WASHINGTON ADMINISTRATIVE CODE" (WAC).
15. THE INSTALLATION OF THE FIRE PROTECTION UNDERGROUND SHALL BE PERFORMED BY A CONTRACTOR HOLDING A LEVEL 3 CONTRACTOR LICENSE PER SECTION 212.80.18(1)(c) OF THE "WASHINGTON ADMINISTRATIVE CODE" (WAC) OR A LEVEL U CONTRACTOR LICENSE PER SECTION212.80.18(1)(d) OF THE "WASHINGTON ADMINISTRATIVE CODE" (WAC). THE INSTALLING CONTRACTOR SHALL HAVE AT LEAST ONE INDIVIDUAL ON STAFF HOLDING A LEVEL 3 DESIGN CERTIFICATION PER SECTION 212.80.18(2)(a)(iii) OF THE "WASHINGTON ADMINISTRATIVE CODE" (WAC) OR AN INDIVIDUAL HOLDING A LEVEL U CERTIFICATION PER SECTION 212.80.18(2)(b)(i) OF THE "WASHINGTON ADMINISTRATIVE CODE" (WAC).

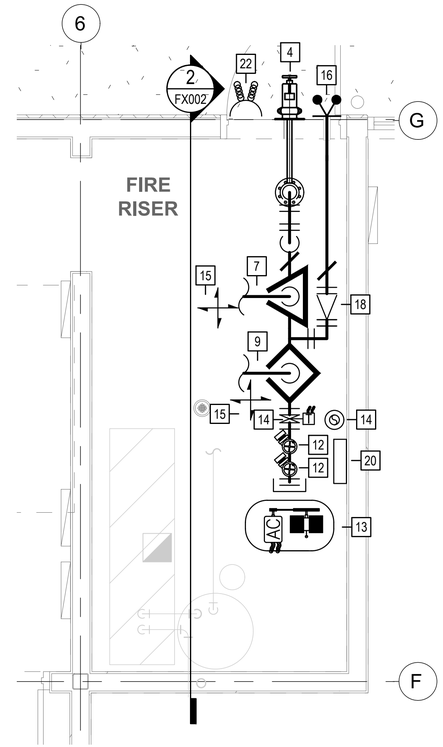

1 FIRE RISER - PLAN VIEW
SCALE: 1/2" = 1'-0"

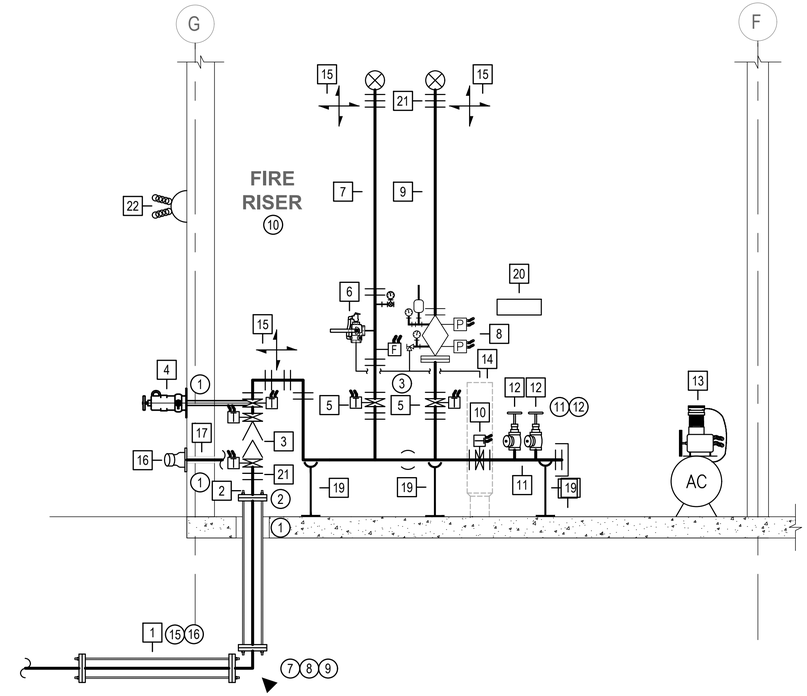

2 FIRE RISER - ELEVATION VIEW
SCALE: 1/2" = 1'-0"

FIRE PROTECTION RISER EQUIPMENT LIST

ITEM	MIN. QTY.	SIZE	DESCRIPTION
1	1	4"	UNDERGROUND COMBINED DOMESTIC/FIRE PROTECTION SUPPLY PIPING
2	1	4" x	FLANGED OR GROOVED REDUCER (IF REQUIRED)
3	1	TBD	DOUBLE CHECK DETECTOR ASSEMBLY (AMES / DERINGER SHOWN)
4	1	TBD	VICTAULIC FIG 775 BUTTERFLY VALVE WALL POST INDICATOR ASSEMBLY
5	1	TBD	GROOVED BUTTERFLY VALVE WITH INTEGRAL TAMPER SWITCH (VALVE NORMALLY OPEN)
6	1	TBD	WET SYSTEM RISER WITH FLOW SWITCH, PRESSURE GAUGE TEST & DRAIN WITH PRESSURE RELIEF VALVE
7	1	TBD	FIRE PROTECTION WET SYSTEM PIPING
8	1	TBD	DRY SYSTEM RISER WITH PRIMER CUP, PRESSURE GAUGES, PRESSURE SWITCHES, AND DRY PIPE VALVE (WITH ACCELERATOR IF REQUIRED)
9	1	TBD	FIRE PROTECTION DRY SYSTEM PIPING
10	1	TBD	GROOVED BUTTERFLY VALVE WITH INTEGRAL TAMPER SWITCH (VALVE NORMALLY CLOSED)
11	1	TBD	PIPE FOR FULL FORWARD FLOW TESTING OF THE BACKFLOW PREVENTER
12	2	2½"	ANGLED HOSE VALVE POINTED TOWARDS DOOR OPENING
13	1	TBD	AIR COMPRESSOR SIZED FOR A 1 HP MOTOR AND A 208 VOLTS AC THREE PHASE POWER SOURCE
14	1	6"	HUB DRAIN
15	1	--	4-WAY SEISMIC BRACE ASSEMBLY LOCATED AT THE TOP OF RISER
16	1	2½ X 2½ X 4	WALL MOUNTED FIRE DEPARTMENT CONNECTION
17	1	4"	FIRE DEPARTMENT CONNECTION PIPING
18	1	4"	CHECK VALVE
19	1	2"	PIPE STAND
20	1	12 HEAD	SPARE HEAD CABINET (INCLUDING HEAD WRENCHES)
21	1	TBD	FLEXIBLE CONNECTION COUPLING
22	1	--	AUDIO/VISUAL NOTIFICATION DEVICE ON THE EXTERIOR OF THE BUILDING AND POWERED THROUGH THE FIRE ALARM PANEL
23	1	TBD	AUTOMATIC DRIP

bcra
T 253.627.4367 F 253.627.4395 WWW.BCRADESIGN.COM
2106 PACIFIC AVENUE, SUITE 300, TACOMA, WA 98402

SEAL

PROJECT
PORT OF EVERETT
WINE WALK BUILDING A12
XXXX SEINER DRIVE
EVERETT, WASHINGTON 98201

REVISIONS

DATE 12.13.2023
BCRA NO. 23045.00.00
DRAWN BY: TLC
REVIEWED BY: DAL
SHEET TITLE
FIRE PROTECTION RISER AND NOTES

bcra
© COPYRIGHT 2023 - BCRA, INC. ALL RIGHTS RESERVED

SHEET
FX002

100% DESIGN DEVELOPMENT

IF SHEET MEASURES LESS THAN 22"X34", IT IS A REDUCED PRINT. REDUCE SCALE ACCORDINGLY

ZZ434 6/9/2023 1:12:43 PM

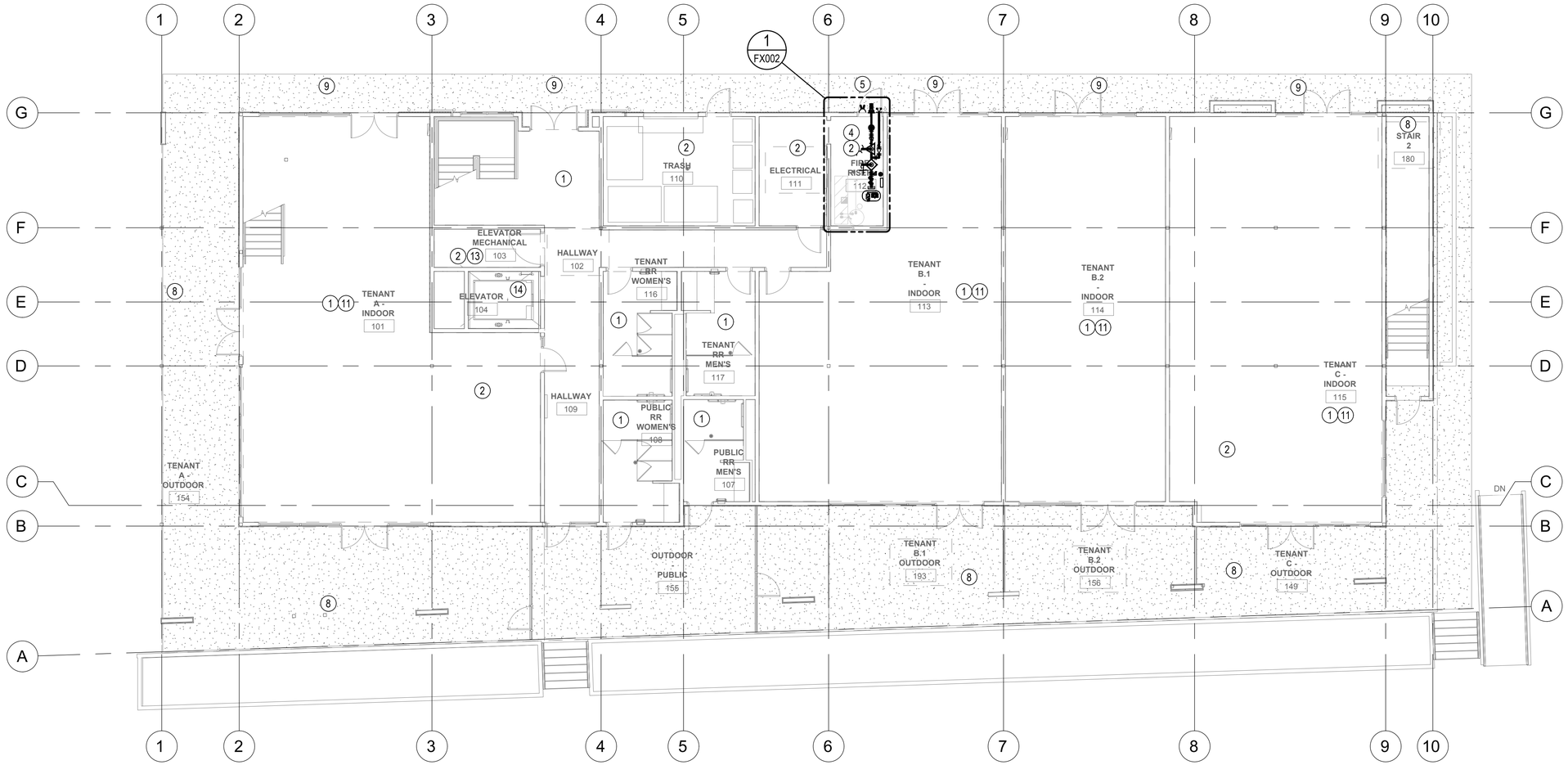

1 FIRE PROTECTION - FIRST FLOOR PLAN

SCALE: 1/8" = 1'-0"

8' 4' 0 8' 16'

SCALE: 1/8" = 1'-0"

N

bcra
T 253.627.4367 F 253.627.4395 WWW.BCRADESIGN.COM
2106 PACIFIC AVENUE, SUITE 300, TACOMA, WA 98402

SEAL

PROJECT
PORT OF EVERETT
WINE WALK BUILDING A12
XXXX SEINER DRIVE
EVERETT, WASHINGTON 98201

REVISIONS

DATE
12.13.2023

BCRA NO.
23045.00.00

DRAWN BY: TLC

REVIEWED BY: DAL

SHEET TITLE
FIRE PROTECTION - FIRST FLOOR PLAN

bcra

© COPYRIGHT 2023 - BCRA, INC. ALL RIGHTS RESERVED

SHEET

FX101

100% DESIGN DEVELOPMENT

22x34 6/9/2023 1:12:43 PM

IF SHEET MEASURES LESS THAN 22"X34", IT IS A REDUCED PRINT. REDUCE SCALE ACCORDINGLY

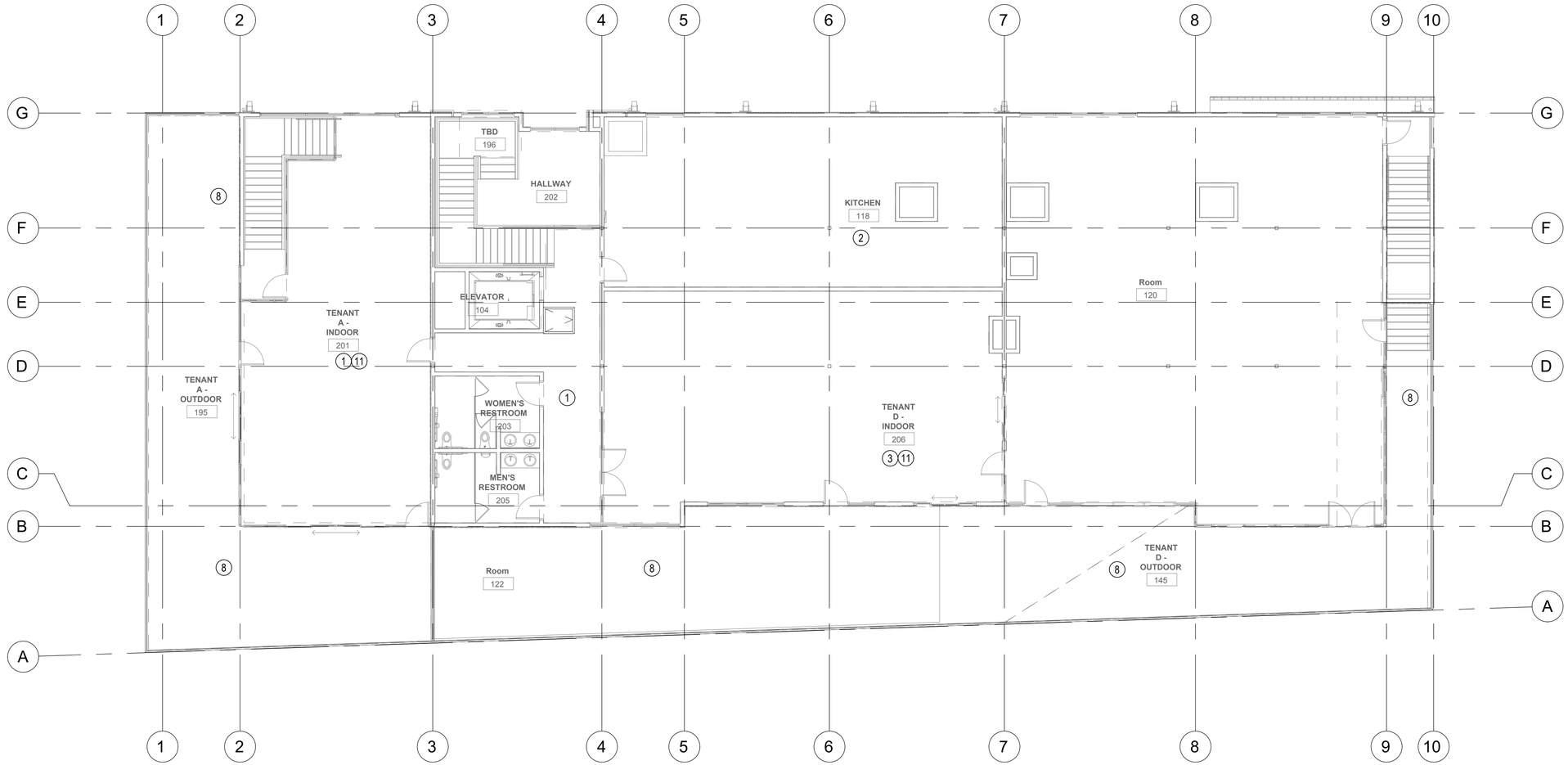

1 FIRE PROTECTION - SECOND FLOOR PLAN

SCALE: 1/8" = 1'-0"

8' 4' 0 8' 16'

SCALE: 1/8" = 1'-0"

bcra
T 253.627.4367 F 253.627.4395 WWW.BCRADESIGN.COM
2106 PACIFIC AVENUE, SUITE 300, TACOMA, WA 98402

SEAL

PROJECT
PORT OF EVERETT
WINE WALK BUILDING A12
XXXX SEINER DRIVE
EVERETT, WASHINGTON 98201

REVISIONS

DATE
12.13.2023

BCRA NO.
23045.00.00

DRAWN BY: TLC

REVIEWED BY: DAL

SHEET TITLE
FIRE PROTECTION - SECOND FLOOR PLAN

bcra

© COPYRIGHT 2023 - BCRA, INC. ALL RIGHTS RESERVED

SHEET

FX102

100% DESIGN DEVELOPMENT

22x34 6/9/2023 1:12:43 PM

IF SHEET MEASURES LESS THAN 22"X34", IT IS A REDUCED PRINT. REDUCE SCALE ACCORDINGLY

The Schuster Group

Port of Everett – Wine Walk Building A12

Everett, Washington

PROJECT MANUAL

Specification Divisions 00 – 48

100% Design Development Set

Date: September 15, 2023

BCRA Project No. 23045.00.00

BCRA
2106 Pacific Avenue, Suite 300
Tacoma, Washington 98402
(253) 627-4367

SECTION 00 0010

PROJECT TEAM

PART 1 GENERAL

1.01 SECTION INCLUDES

A. Identification of Project Team Members and their contact information.

1.02 OWNER

Name: The Schuster Group

Address: 2808-II East Madison Street, Suite 203

City / State / Zip: Seattle, WA 98112

Contact: Holly Gardner

Phone: 206-529-3900

1.03 CONSULTANTS

Architect: Design Professional of Record. Project correspondence from the Contractor regarding this Project shall be directed to the Architect unless alternate arrangements are mutually agreed upon at the Preconstruction Meeting.

Company Name: BCRA

Address: 2106 Pacific Avenue, Suite 300

City / State / Zip: Tacoma, WA 98402

Contact: DJ Dean

Phone: 253-627-4367

Civil Engineer:

Company Name: BCRA

Address: 2106 Pacific Avenue, Suite 300

City / State / Zip: Tacoma, WA 98402

Contact: Ryan Baltazar

Phone: 253-627-4367

Landscape Architect:

Company Name: BCRA

Address: 2106 Pacific Avenue, Suite 300

City / State / Zip: Tacoma, WA 98402

Contact: Eric Streeby

Phone: 253-627-4367

Structural Engineer:

Company Name: Lund Opsahl

Address: 1215 Fourth Avenue, Suite 1200

City / State / Zip: Seattle, WA 98161

Contact: Owen Bower

Phone: 206-402-5156

Mechanical Engineer:

Company Name: BCE Engineers

Address: 6021 12th Street East, Suite 200

City / State / Zip: Fife, WA 98424

Contact: Joe Snyder

Phone: 253-922-0446

Electrical Engineer:

Company Name: BCE Engineers

Address: 6021 12th Street East, Suite 200

City / State / Zip: Fife, WA 98424

Contact: Joe Snyder

Phone: 253-922-0446

PART 2 PRODUCTS (NOT USED)

PART 3 EXECUTION (NOT USED)

END OF SECTION

SECTION 00 0020
TABLE OF CONTENTS

The Schuster Group
PORT OF EVERETT - WINE WALK BUILDING A12
Everett, Washington

100% DESIGN DEVELOPMENT

DIVISION, SECTION AND PARAGRAPH NUMBERING

Numbering and lettering of sections and paragraphs in this Project Manual are merely for identification. Sections included are listed in this Table of Contents together with the number of pages in each section. The Contractor shall check their copies of the Project Manual against this Table of Contents and confirm there are no missing pages or sections.

Number Title No. of Pages

00 0010 - Project Team 3
00 0020 - Table of Contents 6

DIVISION 00 – PROCUREMENT AND CONTRACTING REQUIREMENTS

00 3100 - Information Available to Bidders 1

DIVISION 01 – GENERAL REQUIREMENTS

01 1100 - Summary of Work 5
01 2600 - Contract Modification Procedures 5
Supplemental Instructions Form 1
Proposal Request Form 1
Construction Change Directive Form 1
Change Order Form 1
01 2900 - Schedule of Values and Payment Application 2
01 3100 - Project Management and Coordination 10
RFI Form 1
Four Week Schedule 2
Daily Report Form 4
01 3215 - Construction Schedule 6
01 3233 - Construction Photographs 2
01 3300 - Submittals 6
01 4500 - Quality Control 5
01 5000 - Construction Facilities and Temporary Controls 7
01 6000 - Product Requirements 4
Substitution Request Form 2

DIVISION 01 – GENERAL REQUIREMENTS (CONTINUED)

01 7000 - Execution Requirements 6
01 7343 - Building Dry Out and Environmental Control....7
01 7700 - Closeout Procedures....4
Contractor Project Closeout Checklist....3
01 7813 - Punch List and Backcheck (Group 4)....3
Punch List Form 1
01 7823 - Operations and Maintenance Data (Group 3) 4
01 7839 - Project As-Built Documents (Group 2) 3
01 7900 - Demonstration and Training 4
01 8113 - Low VOC Requirements....3

DIVISION 02 – EXISTING CONDITIONS

02 1725 - Existing Site Utilities 6
02 4113 - Selective Site Demolition....4

DIVISION 03 – CONCRETE

03 3000 - Cast-In-Place Concrete 11
03 3001 - Concrete Floor Slabs....19
03 3003 - Concrete Floor Slab Preparation....3
03 3500 - Polished Concrete Floor Finishing 8
03 5413 - Gypsum Underlayment....7

DIVISION 04 – MASONRY

04 7300 - Manufactured Stone Veneer System 11

DIVISION 05 – METALS

05 1200 - Structural Steel....7
05 5000 - Metal Fabrications 7
05 5200 - Metal Railings....3
05 5500 - Stair Nosings 4

DIVISION 06 – WOOD, PLASTIC AND COMPOSITES

06 1000 - Rough Carpentry 13
06 1733 - Solid Web Wood Joists 5
06 1800 - Glue-Laminated Wood Units 6

DIVISION 07 – THERMAL AND MOISTURE PROTECTION

07 1000 - Below-Grade Waterproofing 7
07 2100 - Building Insulation 9
07 2700 - Building Air Barrier Requirements 11
07 2719 - Self-Adhered Sheet-Applied Air and Water Barrier System 13
07 4000 - Preformed Metal Panel Systems 21
07 4233 - Solid Phenolic Wall Panel System 11
07 4649 - Prefinished Fiber Cement Siding 7
07 4651 - Fiber Cement Soffits 6
07 5423 - TPO Single-Ply Roofing System 16
07 6200 - Sheet Metal Flashing and Trim 15
07 7233 - Roof Hatch 6
07 8400 - Firestopping / Smoke Seal Systems 5
07 9000 - Joint Sealers 11

DIVISION 08 – OPENINGS

08 1100 - Hollow Metal Doors and Frames 9
08 1400 - Wood Doors 5
08 3100 - Access Doors 5
08 3613 - Electrically Operated Overhead Sectional Doors 6
08 4113 - Aluminum Storefront and Entrances 13
08 4115 - Aluminum Folding Glass Wall System 9
08 8000 - Glass and Glazing 7
08 9100 - Exterior Wall Louvers 5

DIVISION 09 – FINISHES

09 2900 - Gypsum Board Assemblies 12
09 3000 - Tile 6
09 6100 - Concrete Floor Sealing 5
09 6500 - Resilient Flooring 2
09 7733 - Plastic Sheet Wainscots 4
09 9000 - Paints and Coatings 13

DIVISION 10 – SPECIALTIES

10 1400 - Interior Signage 7
10 1401 - Exterior Signage 5
10 1419 - Dimensional Letter Signage 4
10 2113 - SCRC Toilet Partitions 5
10 2800 - Toilet and Miscellaneous Accessories 4
10 4400 - Fire Extinguishers and Cabinets 4
10 8200 - Rooftop Mechanical Equipment Screens 5

DIVISION 11 – EQUIPMENT

11 2433 - Roof Anchors 5

DIVISION 12 – FURNISHINGS

12 1013 - Experiential Graphic Design (EGD).....5
12 3662 - Solid Surface Countertops 7

DIVISION 13 – SPECIAL CONSTRUCTION (NOT USED)

DIVISION 14 – CONVEYING EQUIPMENT

14 2426 - Holeless Hydraulic Passenger Elevator 14

DIVISION 20 – GENERAL MECHANICAL

20 0000 - General Mechanical Requirements 23

DIVISION 21 – FIRE SUPPRESSION

21 0000 -General Fire Protection Requirements.....27
21 1123 - Private Fire Service Mains 11
21 1313 - Wet Pipe Automatic Sprinkler Systems.....35
21 1316 - Dry Pipe Automatic Sprinkler Systems.....31

DIVISION 22 – PLUMBING

22 0300 - Excavation and Backfill for Mechanical Underground Utilities 8
22 0513 - Common Motor Requirements for Plumbing Equipment.....5
22 0517 - Sleeves and Sleeve Seals for Plumbing Piping 4
22 0523 - General-Duty Valves for Plumbing Piping 21
22 0548 - Vibration and Seismic Controls for Plumbing Piping and Equipment.....7
22 0553 - Identification for Plumbing Piping and Equipment.....6
22 0719 - Plumbing Piping Insulation 10
22 1005 - Plumbing Piping 33
22 1006 - Plumbing Piping Specialties 12
22 3000 - Plumbing Equipment 20
22 4000 - Plumbing Fixtures.....27

DIVISION 23 – HEATING, VENTILATING, AND AIR CONDITIONING (HVAC)

23 0513 - Motors and Variable Drives 14
23 0523 - Valves for HVAC Piping 15
23 0529 - Hangers and Supports for HVAC Piping and Equipment 10
23 0548 - Vibration and Seismic Control 9
23 0553 - Mechanical Identification for HVAC Piping and Equipment.....5
23 0593 - Air System Testing and Balancing 5
23 0595 - Water System Balancing 5
23 0713 - Equipment Ductwork Insulation.....5
23 0719 - HVAC Piping Insulations 10
23 0900 - Energy Management and Controls (DDC) 37

DIVISION 23 – HEATING, VENTILATING, AND AIR CONDITIONING (HVAC) (CONTINUED)

23 1100 - Natural Gas 4
23 1119 - HVAC Piping Specialties 7
23 2100 - Sleeves and Seals for HVAC Piping and Equipment 4
23 2300 - Refrigerant Piping System....8
23 3113 - Steel Ductwork 17
23 3300 - HVAC Specialties 23
23 3423 - Exhaust Fans 8
23 3600 - VAV Terminal Box Units....3
23 3700 - Air Terminals 5
23 7300 - Air Handling Units with Coils 4
23 8126 - Ductless Split Systems....3
23 8145 - Variable Refrigerant Zone System 9
23 8239 - Electric Heaters 6

DIVISION 25 – INTEGRATED AUTOMATION (NOT USED)

DIVISION 26 – ELECTRICAL

26 0000 - Electrical General Conditions 21
26 0010 - Excavation and Backfill for Electrical Underground Utilities 6
26 0519 - Wires and Cables 5
26 0526 - Grounding....3
26 0532 - Outlet and Pull Boxes....4
26 0533 - Raceway....5
26 0534 - Metal Clad Cable (Type MC) and Fittings 5
26 0923 - Lighting Control Panel 10
26 2413 - Switchboards....7
26 2416 - Panelboards 4
26 2419 - Motor Controllers....4
26 2726 - Switches and Receptacles 6
26 2813 - Fuses....2
26 2816 - Disconnects and Fused Switches 3
26 3100 - Photovoltaic Grid Interface System (No Storage Batteries) 6
26 4300 - Transient Voltage Surge Suppression / Surge Protective Device 13
26 5000 - Lighting....7

DIVISION 27 – COMMUNICATIONS (NOT USED)

DIVISION 28 – ELECTRONIC SAFETY AND SECURITY

28 1600 - Intrusion Alarm System 23
28 3100 - Fire Alarm System....139

DIVISION 31 – EARTHWORK

31 1000 - Site Clearing 5
31 2000 - Earthwork 16
31 2333 - Utility Trenching and Backfill 11
31 2500 - Erosion and Sediment Control 10

DIVISION 32 – EXTERIOR IMPROVEMENTS

32 1100 - Base Course 4
32 1123 - Underslab Capillary Break 3
32 1216 - Asphalt Paving 5
32 1313 - Portland Cement Concrete Paving 8
32 1613 - Concrete Sidewalks and Curbs 10
32 1713 – Wheelstops 3
32 3300 - Site Furnishings 6
32 8000 - Irrigation 11
32 9300 - Plants 20

DIVISION 33 – UTILITIES

33 1000 - Site Water Distribution Systems 7
33 3000 - Sanitary Sewer System 7
33 4000 - Storm Drainage System 5
33 4613 - Foundation Drainage Piping 4
33 5100 - Natural Gas Distribution 4

END OF SECTION

SECTION 00 3100

INFORMATION AVAILABLE TO BIDDERS

PART 1 GENERAL

1.01 RELATED DOCUMENTS

A. Drawings and general provisions of the Contract, including General Conditions, Supplementary Conditions and Divisions 00 and 01 Specification Sections, apply to work of this section.

1.02 REPORTS

A. The following reports are included after this Section:

1.03 PURPOSE

A. The reports are for information and reference purposes only and do not contain Contract Work. In the event of conflicts between these reports and the Contract Documents, the Contract Documents shall govern.

PART 2 PRODUCTS (NOT USED)

PART 3 EXECUTION (NOT USED)

END OF SECTION

SECTION 01 1100

SUMMARY OF WORK

PART 1 GENERAL

1.01 RELATED DOCUMENTS

A. Drawings and general provisions of the Contract, including General Conditions, Supplementary Conditions and Divisions 00 and 01 Specification Sections, apply to work of this section.

1.02 SECTION INCLUDES

A. Summary of Work, including:

1. Project Description.
2. Contract Method.
3. Work by Owner.
4. Permit Conditions.
5. Permit Fees.
6. Existing Utilities.
7. Objection to Application of Products.
8. Existing Information.
9. Miscellaneous.
10. Time of Completion.
11. Work Hours.
12. Contractor Use of Site.
13. Material Safety Data Sheets.
14. Construction Documents.

1.03 PROJECT DESCRIPTION

A. Briefly and without force and effect upon the Contract Documents, the Work of this Contract can be summarized as follows:

1. Construct the Port of Everett - Wine Walk Building A12, located in Everett, Washington as shown on the Contract Drawings and Specifications.

B. Provide materials, labor, equipment, temporary facilities and construction expertise as required to complete the Project as shown in the Contract Documents.

C. Contractor represents that he has carefully examined prior to bidding, all Contract Documents and site conditions, and understands the character, quality and quantity of work called for and all conditions affecting the Contract Work.

1.04 CONTRACT METHOD

A. Construct the Work under a single Prime Contract Stipulated Sum.

B. The General Contractor is responsible for coordinating, understanding and directing the work of all trades involved in the Project.

C. General Contractor is responsible for coordinating and scheduling work of each subcontractor to expedite progress of the Project. Cooperate and coordinate with any other separate Contractors under contract with the Owner.

1.05 WORK BY OWNER

A. Work By Owner:

1. Special Inspector and testing laboratory for code required inspections specified in Section 01 4500.

B. Coordinate with Owner's separate Contractors and suppliers and accommodate their work on site.

1.06 PERMIT CONDITIONS

A. Conform to permit conditions and requirements imposed by authority(s) having jurisdiction.

B. Maintain the fire hydrants and emergency vehicle access road on Project site in functional condition as required by the City of Everett for duration of the Contract.

1.07 PERMIT FEES

A. The Owner will secure and pay for all required plan-checking and the general Building Permit Fee. All other permits including Construction Permits and fees shall be paid by Contractor as described in the General Conditions.

1. Construction Permits: Include but not limited to HVAC Permit, Plumbing Permit, Electrical Permit (high voltage), Automatic Fire-Sprinkler System, and Fire Alarm and Detection System.

1.08 EXISTING UTILITIES

A. Refer to Section 02 1725.

1.09 OBJECTIONS TO APPLICATION OF PRODUCTS

A. Subcontractors and suppliers submitting a bid for this Project shall thoroughly familiarize themselves with specified products and installation procedures and submit to Architect any objections (in writing) no later than ten (10) days prior to Bid Date. Any response by the Architect shall be by addendum. Submittal of Bid constitutes acceptance of products and procedures specified.

1.10 EXISTING INFORMATION

A. Subcontractors and suppliers shall verify existing site conditions prior to bidding. Submit any discrepancies between the Contract Documents and existing conditions no later than ten days prior to Bid Date. Any response by the Architect shall be by addendum. Submittal of bid constitutes acceptance of existing conditions.

1.11 MISCELLANEOUS

A. Items include, but are not limited to:

1. Maintain pedestrian and vehicular access to and around site.

2. Do not encumber site access with materials or equipment.

3. Do not overload structure with weight endangering structure.

4. Obtain and pay for use of additional storage or work areas needed for operations.

1.12 TIME OF COMPLETION

A. Time is of the essence, the Owner needs the Work completed within the times listed so that they can occupy the building. Provide the necessary management, equipment and manpower, including any overtime, double-shifting or special work schedules, required to achieve completion of the Project within the times listed in the following Completion Schedule and Milestone Dates.

B. Completion Schedule and Milestone Dates:

1. Contract Award: On or about _____ (as soon as possible after receipt of bids acceptable to the Owner, Contractor Qualification Statement and Post Bid Submittals and the execution of the Contract award approval process).

2. Construction Start: _____

3. Notification of Substantial Completion: _____

4. Substantial Completion Date: _____

5. Completion of Punch List Items: _____

6. Final Completion: _____

1.13 WORK HOURS

A. Work Hours: City of Everett allowed work hours are 7:00 am – 10:00 pm, Monday thru Friday; 8:00 am – 6:00 pm, Saturday and no work is allowed on Sundays. These work hours are for noise generating work that would impact the surrounding neighborhood. Additional work hours may be available for non-noise generating work if coordinated and approved by Owner and City of Everett.

1.14 CONTRACTOR'S USE OF SITE

A. The Contractor has direct responsibility for and control of the construction site for the duration of the Project, subject to the following:

1. Contractor's Use of Site and Building: Limit use of the site and building for work, storage and access only as required to achieve work of this contract.

2. Contractor's Use of Site: Limit use of the site for work, storage and access only as required to achieve work of this contract.

3. Construction Facilities and Temporary Controls: Refer to Section 01 5000.

4. Emergency Vehicle Access: Maintain access roadway and fire lanes on site for use by emergency vehicles. Coordinate requirements with local authority having jurisdiction.

5. Contractor’s Materials / Equipment Staging Area: Limit storage of materials and equipment to within the staging area and Contractor occupied construction areas.

6. Access Routes to Construction Areas: Contractor shall maintain site access routes in a clean and safe manner free of construction materials, debris and dirt.

7. Public Safety: Contractor is responsible for performing a safety analysis and implementing conclusions from their analysis and, for maintaining site in a manner which prevents any unsafe or potentially unsafe condition.

   a. Implement and enforce conclusions from safety analysis for duration of Project.

   b. Maintain site in a manner that prevents any unsafe or potentially unsafe condition.

c. Comply with the requirements of IBC Chapter 33 as applicable to project site.

8. Protection of Existing: Protect existing roadways, utilities, etc. from damage or defacement; repair / replace any damage.

9. Construction Areas: Monitor to prevent unauthorized vehicles and persons from entering site. After work hours leave Contractor's work area locked and all tools in locked tool boxes. Post "DANGER - KEEP OUT - CONSTRUCTION AREA" signs at building entries and around perimeter of construction areas.

a. Assume full responsibility for the protection and safekeeping of products under this Contract, stored on the site.

1.15 MATERIAL SAFETY DATA SHEETS

A. Post Material Safety Data Sheets (MSDS) for hazardous materials on site in accordance with the Hazard Communications Standard, WAC 296-62-054 through -05427 (available from the State Department of Labor and Industries).

B. Provide a bulletin board for hazard communications program in location accessible 24 hours a day and convenient to employees, subcontractors and their employees and representatives for Owner, Architect and other agencies that may visit Project site and cone into contact with hazardous chemical substances.

1.16 CONSTRUCTION DOCUMENTS

A. Contractor is responsible for posting any addendums in the Contract Drawings and Project Manual.

B. Owner will provide the Contractor an electronic copy of the Contract Drawings and Project Manual. The Contractor shall be responsible for printing the documents as required to complete the work and meet the requirements of the Project.

PART 2 PRODUCTS (NOT USED)

PART 3 EXECUTION (NOT USED)

END OF SECTION

SECTION 01 2600

CONTRACT MODIFICATION PROCEDURES

PART 1 GENERAL

1.01 RELATED DOCUMENTS

A. Drawings and general provisions of the Contract, including General Conditions, Supplementary Conditions and Divisions 00 and 01 Specification Sections, apply to work of this section.

1.02 SECTION INCLUDES

A. Administrative and Procedural Requirements for Contract Modification Procedures, including:

1. Supplemental Instructions.
2. Construction Change Authorization.
3. Documentation of Proposals and Claims.
4. Change Orders.
5. Distribution.

1.03 SUMMARY

A. Requirements Include:

1. Promptly implement change order and field order procedures.
   a. Provide full written data required to evaluate changes.
   b. Maintain detailed records of work done on a time-and-material / force account basis.
   c. Provide full documentation to Architect on request.

B. Related Requirements:

1. Coordinate related requirements specified in other parts of Project Manual including but not limited to the following:
   a. Change Orders / General Conditions (AIA A201), Article 7.
   b. Applications for Payment.
   c. Construction Schedules.

d. Schedule of Values.

e. Substitutions and Product Options.

f. Project As-Built Documents.

2. Designate, in writing, the names of authorized members of Contractor's organizations who accept changes in the work, and are responsible for informing other workers of the authorized changes.

3. Contractor agrees; Architect approves; Owner authorizes.

C. Definitions:

1. Change Order: See General Conditions (AIA A201) and Change Order Document.

2. Architect's Supplemental Instructions: Work order, instructions, or interpretations, signed by Architect making minor changes in the work not involving a change in Contract Sum or Contract Time.

3. Construction Change Authorization: Written order to the Contractor, signed by Owner, Architect and Contractor amending Contract Documents as described. This order authorizes Contractor to proceed with a change altering Contract Sum or Contract Time, and is to be included in a subsequent Change Order.

D. Preliminary Initiation / Changes:

1. Changes may be initiated by Owner and Architect through a Proposal Request submitted to Contractor. Request will include:

a. Detailed description of Change, Products, and location of change in Project.

b. Supplementary or revised Drawings and Specifications.

c. Projected time span for making change.

1) Statement as to whether overtime work is, or is not, authorized.

d. A specific period of time during which requested price will be considered valid.

e. Documentation supporting any change in Contract Sum or Contract Time, as appropriate.

E. Construction Change Authorization:

1. In lieu of Proposal Request, Architect may issue a construction change authorization for Contractor to proceed with a change for subsequent inclusion in Change Order.

2. Authorization describes work change additions and deletions, with attachments of revised Contract Documents to define details and designate any change in Contract Sum and Contract Time.

3. Owner and Architect will sign and date as authorization to proceed with changes. General Contractor cannot be paid for the work until it is incorporated into a change order and signed by all parties.

4. Contractor signs and dates to indicate agreement with terms.

F. Documentation of Proposals and Claims:

1. Support each lump sum proposal quotation with sufficient substantiating data.

2. On request provide additional data to support time and cost computations:

a. Labor Required; Hours, Hourly Rate.

b. Equipment Required.

c. Products Required.

1) Recommended source of purchase cost.

2) Quantities required of each material.

3) Material unit costs and extended price.

d. Taxes, Insurance, and Bonds.

e. Documented credit for work deleted from Contract.

f. Overhead and Profit. Article 7.

g. Justification for any change in Contract Time.

3. Support each claim for additional costs, and time and material / force account work with documentation, as required for lump sum proposal. Include additional information:

a. Name of Owner's authorized agent who ordered work, and date of order.

b. Dates and times work was performed, and by whom.

c. Time record, summary of hours worked, and hourly rates paid.

d. Receipts and invoices for:

1) Equipment used, listing dates and times of use.

2) Products used, listing of quantities.

3) Subcontracts.

4. Document requests for substitutions for Products as specified.

G. Preparation of Change Orders:

1. Architect will prepare Change Orders.

2. Change Order Form: Sample for is attached to the end of this Section.

3. Change Order provides accounting of any Contract Sum and Contract Time adjustment.

H. Lump Sum / Fixed Price Change Order:

1. Content of Change Orders will be based on, either:

a. Architect's Proposal Request and Contractor's responsible Proposal as mutually agreed between Owner and Contractor.

b. Contractor's Change Order Request/ Proposal, as recommended by Architect.

2. Proper signatures (dated) authorize you to proceed with changes.

3. Sign and date Change Order if you agree with terms.

I. Time and Material / Force Account Change Order / Construction Change Authorization:

1. Appropriately executed and signed Change Order authorizes you to proceed.

2. At completion of change, submit itemized accounting and supporting data as provided in Article "Documentation of Proposals and Claims" of this Section.

3. All concerned sign and date Change Order and / or Construction Change Authorization establishing change in Contract Sum and Contract Time.

4. Contractor signs and dates indicating his agreement.

J. Correlation with Contractor's Submittals:

1. Revise Schedule of Values and Request for Payment forms to record each change as a separate item of work. Record adjusted Contract Sum.

2. Monthly revise Construction Schedule reflecting each change in Contract Time.

   a. Revise sub schedules to show changes for other items of work affected by changes.

   b. Upon completion of work under Change Order, enter pertinent changes in Record Documents.

K. Distribution:

1. Send copies to all concerned parties.

   a. Change Orders:

      1) Upon authorization, Owner transmits an electronic PDF signed copy to Contractor and Architect.

   b. Construction Change Authorization:

      1) Electronic Distribution of PDF Copies:

         a) To Owner.

         b) To Contractor.

         c) To Architect.

L. Sample Forms: The following sample contract modification forms are attached at the end of this section.

1. Supplemental Instructions.

2. Proposal Request.

3. Construction Change Directive.

4. Change Order.

PART 2 PRODUCTS (NOT USED)

PART 3 EXECUTION (NOT USED)

END OF SECTION

ARCHITECT'S SUPPLEMENTAL INSTRUCTION NO. XXX

PROJECT: *The Schuster Group*
Port of Everett – Wine Walk Building A12

(DATE)

To Contractor:

Owner: The Schuster Group
2808-II East Madison Street, Suite 203
Seattle WA 98112

From Architect: BCRA
2106 Pacific Avenue, Suite 300
Tacoma, WA 98402

Architect Project No. 23045.00.00

The Work shall be carried out in accordance with the following Supplemental Instruction issued in accordance with the Contract Documents. Proceeding with the Work in accordance with these instruction indicates your acknowledgment that there will be no change in the Contract Sum or Contract Time. Owner authorization is required prior to proceeding with the work of this Supplemental Instruction if any change in the Contract Sum or Contract Time is involved.

DESCRIPTION

ATTACHMENTS

ISSUED BY

(Architect)

cc: (Owner)
(Contractor)

PROPOSAL REQUEST NO. XXX

PROJECT: *The Schuster Group*
Port of Everett – Wine Walk Building A12

(DATE)

To Contractor:

Owner: The Schuster Group
2808-II East Madison Street, Suite 203
Seattle WA 98112

From Architect: BCRA
2106 Pacific Avenue, Suite 300
Tacoma, WA 98402

Architect Project No. 23045.00.00

Please submit an itemized proposal for changes in the Contract Sum and Contract Time for proposed modifications to the Contract Documents descibed herein. Within 10 days, the Contractor must submit this proposal or notify the Architect, in writing, of the date on which proposal submission is anticipated.

THIS IS NOT A CHANGE ORDER, A CONSTRUCTION CHANGE DIRECTIVE OR A DIRECTION TO PROCEED WITH THE WORK DESCRIBED IN THE PROPOSED MODIFICATIONS.

DESCRIPTION

ATTACHMENTS

ISSUED BY

(Architect)

cc: (Owner)
(Contractor)

CONSTRUCTION CHANGE DIRECTIVE NO. XXX

PROJECT: *The Schuster Group*
Port of Everett – Wine Walk Building A12

(DATE)

To Contractor:

Owner: The Schuster Group
2808-II East Madison Street, Suite 203
Seattle WA 98112

From Architect: BCRA
2106 Pacific Avenue, Suite 300
Tacoma, WA 98402

Architect Project No. 23045.00.00

You are hereby directed to make the following changes in this Contract:

DESCRIPTION

Attachment:

PROPOSED ADJUSTMENTS

1. The proposed basis of adjustment to the Contract Sum is:
   - ☐ Lump Sum increase or decrease of $_____
   - ☐ Unit Price of $_____ per _____
   - ☐ As provided in Section 7.3.3.1 of AIA Document A201-2007
2. The Contract Time is proposed to [remain unchanged]. The proposed adjustment, if any, is 0 days.

When signed by the Owner and Architect and received by the Contractor, this document becomes effective IMMEDIATELY as a Construction Change Directive (CCD), and the Contractor shall proceed with the change(s) described above.

Contractor signature indicates agreement with the proposed adjustments in Contract Sum and Contract Time set forth in this CCD.

BCRA	(OWNER)	(CONTRACTOR)
BY (*Signature)*	BY (*Signature)*	BY (*Signature)*
DATE	DATE	DATE

ISSUED BY

(Architect)

cc: (Owner)
(Contractor)

CHANGE ORDER NO. XXX

PROJECT: *The Schuster Group*
Port of Everett – Wine Walk Building A12

(DATE)

To Contractor:

BCRA Project No: 23045.00.00
Contract Date: (DATE)
Contract For: General Construction

THE CONTRACT IS CHANGED AS FOLLOWS:

1. $
2. $

TOTAL THIS CHANGE ORDER $

The original Contract Sum was…….. $ _____
The net change by previously authorized Change Orders…… $ _____
The Contract Sum prior to this Change Order was……. $ _____
The Contract Sum will be increased by this Change Order in the amount of…. $ _____
The new Contract Sum including this Change Order will be……. $ _____

The Contract Time will be unchanged by zero (0) days.
The date of Substantial Completion as of the date of this Change Order is (DATE).

NOTE: This Change Order does not include changes in the Contract Sum, Contract Time or Guaranteed Maximum Price which have been authorized by Construction Change Directive until the cost and time have been agreed upon by both the Owner and Contractor, in which case a Change Order is executed to supersede the Construction Change Directive.

NOT VALID UNTIL SIGNED BY THE ARCHITECT, CONTRACTOR AND OWNER.

ARCHITECT	**CONTRACTOR**	**OWNER**
BCRA 2106 Pacific Avenue, Suite 300 Tacoma, WA 98402		The Schuster Group 2808-II East Madison Street, Suite 203 Seattle WA 98112
BY	**BY**	**BY**
DATE	DATE	DATE

SECTION 01 2900

SCHEDULE OF VALUES AND PAYMENT APPLICATION

PART 1 GENERAL

1.01 RELATED DOCUMENTS

A. Drawings and general provisions of the Contract, including General Conditions, Supplementary Conditions and Divisions 00 and 01 Specification Sections, apply to work of this section.

1.02 SECTION INCLUDES

A. Administrative and Procedural Requirements for the Schedule of Values and Payment Applications.

1.03 SUBMITTAL

A. Submit the Schedule of Values in PDF format via email to the Architect for review.

1. Transmit under transmittal letter. Identify Project by title and by contract number.

1.04 FORMAT

A. Prepare Schedule of Values and Payment Application on format required by the Owner.

B. For Specification Divisions 02 through 48 of the Project Manual follow the Table of Contents for minimum listing of schedule of values. Identify each line item by number and title of each specification section. Complex line items may be required to be listed in component parts of the line item.

1. List material and labor costs on separate line items.

C. For Specification Division 01 as a minimum include one line item for each of the following: mobilization, General Conditions, bonds and insurance, submittals, punch list correction, as-built drawings, O and M manuals, operation instructions and demobilization.

1. Refer to the General Conditions of the Contract for limitations on mobilization and closeout line items

1.05 REQUIREMENTS

A. These requirements are in addition to the requirements found in the General Conditions of the Contract.

B. Two (2) weeks prior to submission of first Application and Certificate for Payment, submit schedule of values for each project to Architect and Owner for review.

C. List installed value of each major item of Work and each subcontracted item of Work as a separate line item to serve as a basis for computing values for Progress Payments; as a minimum, provide at least one line item for each specification section. Round off values to nearest dollar.

D. List guarantees / warranties as separate line items for each type of work, such as roofing, painting, etc. Show the value of each of these on the Schedule of Values.

E. For each major subcontract or work of a specification section, list materials and installation as separate line items.

F. Where the value of a line item exceeds $50,000, break down item by major products or operations as separate line items.

G. Line item listings shall each include a directly proportional amount of Contractor's overhead and profit.

H. For items on which payments will be requested for stored products, list subcontractor values for cost of stored products.

I. Include separate line item for Project Closeout. Cost for this item shall be either one-half of the Contractor's mobilization cost or 3 percent of the total Contract Amount, whichever amount is greater.

1.06 APPLICATION AND CERTIFICATE FOR PAYMENT

A. Format: The Schedule of Values will be typed by the Contractor onto the Application and Certificate for Payment Forms approved by the Owner.

B. Submission to Owner: Submit an electronic, PDF copy of the signed and notarized Application and Certificate for Payment for review.

C. Substantiating Data:

1. When Architect / Owner requires substantiating information, submit data justifying line item amounts in question.

2. Provide an electronic, PDF copy of the substantiating data with cover letter for the Application and Certificate for Payment.

PART 2 PRODUCTS (NOT USED)

PART 3 EXECUTION (NOT USED)

END OF SECTION

SECTION 01 3100

PROJECT MANAGEMENT AND COORDINATION

PART 1 GENERAL

1.01 RELATED DOCUMENTS

A. Drawings and general provisions of the Contract, including General Conditions, Supplementary Conditions and Divisions 00 and 01 Specification Sections, apply to work of this section.

1.02 SECTION INCLUDES

A. Administrative and Procedural Requirements for:

1. Project Management.
2. Coordination.
3. Variations, Revisions and Clarifications.
4. Preconstruction Conference.
5. Progress Meetings.
6. Pre-Installation Conferences.

1.03 PROJECT MANAGEMENT

A. General: Provide direct, effective, experienced, cooperative, team-oriented, hands-on management of the Work including the daily construction operations on the Project site and that part of the Work that the Contractor chooses to delegate to Subcontractors / Suppliers.

1. Project management personnel shall be employees of the Contractor and shall not be subcontracted, or delegated to others.
2. Project requires a full-time project manager, superintendent , and project engineer.

B. Submittals:

1. Refer to Section 01 3300 for submittal procedures.

C. Superintendent: Employ a Project Superintendent (different person than the Project Manager) housed in a temporary office on the Project site to oversee, direct, and manage the construction of the Work and including, but not limited to, the following minimum characteristics and responsibilities:

1. A good communicator, organized, effective and capable of managing multiple tasks, difficult personalities and tight deadlines without losing self-control or management effectiveness.

2. Trained, knowledgeable and experienced in job site safety and shall be responsible for managing safety issues on site in conformance with Federal, State and Local regulations.

3. Superintendent shall become thoroughly familiar with the requirements of the Contract Documents before work is started.

4. Responsible for executing the Work in conformance with the Construction Schedule specified in Section 01 3215 so that Project is completed on time.

5. Oversee and direct the work of Subcontractors and suppliers and confirm they are conforming to the requirements of the Contract Documents.

6. Jointly with the Project Manager, coordinate the Work of this Project as specified under “Coordination” in this section.

7. Responsible for determining the means and methods used to execute the Work.

8. Responsible for coordinating Work requiring independent inspection with the testing agency(s).

9. Responsible for managing and controlling the quality of the Work (including work by Subcontractors) in conformance with the Contract Documents and good construction practice.

10. Responsible for coordinating with the Authority having jurisdiction and Building Inspector(s) inspections and requirements.

11. Responsible for coordinating with utility providers.

12. Responsible for coordinating the final inspections required by Authorities having jurisdiction required for issuance of the Certificate of Occupancy.

13. Responsible for inspecting the work jointly with the Project Manager and preparing the Contractor’s Punch List specified in Section 01 7813.

14. Provide a Daily Report for each day on which work is performed on the job site on the Daily Report Form included at the end of this section and submit to the Owner and Architect the next day.

D. Project Engineer: Employ a Project Engineer to support the work in the field including, but not limited to, the following minimum project management tasks:

1. Provide any task(s) required to support the construction of the Work and facilitate a planned, orderly and timely management of the Work.

2. Computer Skills: Experienced in using Microsoft Word, Excel, Adobe Acrobat (PDF files) e-mail, and whatever scheduling software is employed.

3. Submittal Review: Manage the submittal process specified in Section 01 3300 so that submittals are reviewed and materials / equipment ordered and delivered so as to avoid delay in the Project Schedule.

    a. Review each submittal package for accuracy, completeness and conformance to the requirements of the Contract Documents.

    b. Review submittals for the quantity of items, field dimensions, coordination with adjacent work, and coordination of information.

    c. Apply Contractor's approval stamp to submittals before sending to Architect for review.

    d. Pick up and deliver submittals when required to meet ordering deadlines.

    e. Distribute submittals to Subcontractors and suppliers that have work that is affected by or requires coordination with the submittal.

4. Coordination: Jointly with the Project Superintendent, coordinate the Work of this Project as specified under "Coordination" in this section.

5. Field Engineering: Provide coordination drawing, field engineering and detailing services as required convert the design concept shown on the Drawings and specified into installation drawings required to construct the Work.

    a. Drawings may be hand drafted or drafted in AutoCAD / Revit.

    b. Maintain a file of completed drawings; enter pertinent data onto as-built drawings.

    c. Provide copy of drawings to Architect upon request.

6. Field Quality Control: Manage the various aspects of quality control for the Project including the following:

    a. Inspect materials and equipment daily as they are delivered on site for conformance to the requirements of the Contract Documents and reviewed submittals; provide written notification of any non-conforming items to Subcontractor / Supplier responsible with copy to the Architect.

    b. Inspect, monitor and document the work in progress for compliance with the Contract Documents; provide written notification of any non-conforming Work to Subcontractor / Supplier responsible with copy to the Architect.

c. Monitor geotechnical engineer and testing agency inspections and reports, take appropriate action to resolve any non-conforming work.

d. Coordinate and monitor site visits and inspections by manufacturer's representatives; take appropriate action to resolve any non-conforming work or coordination issues.

e. Monitor and record building acclimatization and dry out specified in Section 01 5000.

7. RFI Coordination: Manage the preparation and distribution of RFI including the following:

a. Review field questions to determine if they require an RFI or field engineering / coordination by Contractor

b. Assign consecutive number to each RFI issued.

c. Maintain up to date log of each RFI issued, listing date sent, date answer received and who RFI was distributed to.

8. Pre-Installation Conferences: Schedule and lead pre-installation conferences specified in various sections of the Specifications and any other work category that requires coordination or review of technical requirements.

a. Keep minutes of the conference and send out meeting minutes to attendees.

b. Document any decisions made that modify or amend the requirements of the Contract Documents.

9. As-Built Drawings: Manage the preparation of the as-built drawings specified in Section 01 7839.

a. Coordinate Subcontractor as-built data incorporation into the as-built drawing set.

b. Maintain up-to-date as-built drawing set in the field office for review by Architect and Engineers upon request or at monthly payment request review.

10. Operation and Maintenance Manual Coordination: Manage the information collection and preparation of the operation and maintenance manuals specified in Section 01 7823.

11. Systems Start-Up / Shakedown: Coordinate the connection and testing of equipment / systems installed in the Project.

a. Confirm each Subcontractor's work is completed and final connections / adjustments made.

b. Coordinate connection and testing by Subcontractor responsible for equipment / system.

c. Confirm proper operation of equipment / system including each different option, accessory and feature after start-up.

d. Prepare a list of deficiencies and uncompleted items for equipment / systems and distribute to the Subcontractors responsible with copy to the Architect; manage completion / correction in timely manner.

12. Punch List Review: Together with the Project Superintendent, inspect the completed Work and prepare the Contractor's Punch List of deficiencies in the Work specified in Section 01 7813.

a. Manage the timely completion of Contractor's Punch List items.

b. Submit copy of Contractor's Punch List showing that items have been satisfactorily completed when notifying Architect that work is substantially complete and ready for Architect's punch list review.

c. Manage the timely completion of Architect / Consultant Punch List items.

d. Provide written notification to Architect when deficiencies noted in Architect / Consultant Punch List have been completed.

1.04 COORDINATION

A. General Coordination:

1. Coordinate the Work of trades and other sections to ensure that elements of the work are installed in their proper sequence, without the need for unplanned modifications to the structure, building systems or work already installed.

2. Provide direct coordination of the Work; do not delegate coordination responsibility to any subcontractor.

3. Plan out the Work in advance and anticipate the interrelationships between each subcontractor and their relationship to the overall Project.

4. Provide the leadership, direction and decisions necessary to prevent subcontractor and supplier problems and disputes from affecting the Project Schedule or the quality of the work.

5. Coordinate scheduling, submittals and work of the various sections of Specifications to assure proper, efficient and orderly sequence of preparation and installation of interdependent construction elements, with provisions for accommodating items installed later.

6. Verify that utility requirement characteristics of operating equipment are compatible with building utilities. Coordinate work of various sections having interdependent responsibilities for installing, connecting to, and placing in service, such equipment.

7. Coordinate completion and cleanup of Work of separate sections in preparation for Completion and for portions of the work designated for Owner's occupancy or use.

8. After Owner occupancy of premises, coordinate access to site for correction of defective Work and Work not in accordance with Contract Documents, to minimize disruption of Owner's activities.

B. Site Utilities Coordination:

1. Coordinate utility connection work with each utility provider, including schedule, layout and any special requirements of the utility provider.

2. Coordinate the work of trades to assure proper fit and the proper operation of systems and equipment.

3. Coordinate space requirements and installation of utility work. Utilize spaces efficiently to maximize accessibility for other installations, for maintenance and for repairs.

4. Lay out, work through and resolve any conflicts or problems involving site utility work that share the same space or require a special sequence of installation prior to starting any fabrication or installation. Provide coordination drawings wherever needed to maintain control of the installation in areas involving numerous trades.

5. Leave adequate space for maintenance access, by a normal size maintenance man, to equipment and items without the need for special equipment or removal of items that block access.

1.05 VARIATIONS, REVISIONS AND CLARIFICATIONS

A. Variations, revisions and clarifications to the work not involving an adjustment to the Contract Sum or Contract Time will be confirmed in writing. These written confirmations may be included in the Project minutes, memos to the Contractor and Owner, e-mail correspondence, or in answers to written Requests for Information (RFI).

B. Requests for Information (RFI) shall be submitted on Contractor’s standardized RFI form. This form must be completely filled out as applicable by the Contractor prior to submission. Submit RFI via e-mail.

C. Requests For Information (RFI) shall be limited to a single subject and discipline, do not submit RFI with multiple unrelated questions.

D. Adhere to the requirements of the General Conditions of the Contract for any variations, revisions and / or clarification to the work that the Contractor believes will involve a change in the Contract Sum or Contract Time.

E. For Shop Drawing variations conform to requirements of the General Conditions of the Contract and Section 01 3300.

1.06 PRECONSTRUCTION CONFERENCE

A. Architect and Owner will schedule a preconstruction conference at start of construction.

B. Attendance Required: Contractor, Owner and Architect / Engineer.

C. Agenda:

1. Execution of Owner-Contractor Agreement.

2. Submission of executed bonds and insurance certificates.

3. Distribution of Contract Documents.

4. Submission of initial Submittal schedule.

5. Designation of personnel representing the parties in Contract and the Architect.

6. Discussion of list of Subcontractors, list of Products, schedule of values and progress schedule.

7. Procedures and processing of field decisions, submittals, substitutions, applications for payments, proposal request, Change Orders and Contract closeout procedures.

8. Scheduling.

9. Coordination with Owner.

10. Testing and inspection coordination.

11. Procedures for maintaining record documents.

12. Requirements for start-up of equipment.

13. Inspection and acceptance of equipment put into service during construction period.

14. Contractor Safety.

1.07 PROGRESS MEETINGS

A. Progress meetings will be held on a regularly scheduled basis not exceeding once per week.

1. Architect will administer the meeting, record decisions and actions from the meeting and send copies of meeting notes to Owner and Contractor.

2. The Contractor will be responsible to distribute copies to his field representative and to Subcontractors.

B. Location of Meeting: Progress meetings will be held at the job site. The contractor shall make physical arrangements for the meeting space.

C. Attendance: Contractor's management team, Owner, Architect and professional Consultants; subcontractors; suppliers and others as appropriate to agenda may attend.

D. Agenda:

1. Approval of minutes of previous meetings.

2. Review of Work progress since previous meeting.

3. Review work planned.

4. Review Project Schedule (4-week and Master CPM Schedule).

5. Review submittal schedules; expedite as required.

6. Review of Request for Information (RFI).

7. Review deliveries.

8. Review proposed changes.

9. Review technical and administrative questions / concerns from Contractor, Owner, Architect, Consultants.

10. Review As-Built Drawings.

11. Field Observations.

E. Four-Week Schedule:

1. Prior to each meeting, prepare a four (4) week schedule showing work completed during the previous week, work that is in progress for the current week and work planned for the following two weeks. This four week schedule, which is revised weekly by the Contractor, will be presented by the Contractor at the progress meeting and a copy will be given to the Architect and to the Owner at that time.

2. In the event that a progress meeting is not scheduled for the current week, prepare the 4 week schedule and forward it to the Architect in the same week.

1.08 PRE-INSTALLATION CONFERENCES

A. When required in individual specification sections or when Owner, Architect or Contractor determines the need, the Contractor shall convene a pre-installation conference at the job site prior to commencing work of the section. The list below is the minimum number of required pre-installation conferences required for the Project:

1. Section 03 3001 - Concrete Floor Slabs.

2. Section 03 3500 - Polished Concrete Floor Finishing.

3. Section 03 5413 - Gypsum Underlayment.

4. Section 04 7300 - Manufactured Stone Veneer System.

5. Section 07 2700 - Building Air Barrier Requirements.

6. Section 07 2719 - Self-Adhered Sheet-Applied Air and Water Barrier System.

7. Section 07 4000 - Preformed Metal Panel Systems.

8. Section 07 4233 - Solid Phenolic Wall Panel System.

9. Section 07 4649 - Prefinished Fiber Cement Siding.

10. Section 07 5423 - TPO Single-Ply Roofing System.

11. Section 07 6200 - Sheet Metal Flashing and Trim.

12. Section 32 9300 - Plants.

B. Require attendance of parties directly affecting, or affected by, work of the specific section.

C. Notify Owner and Architect seven (7) calendar days in advance of meeting date.

D. Pre-installation conferences shall be scheduled a minimum of seven calendar days, unless noted otherwise by the section, prior to the commencement of the work of the section. Refer also to Section 07 2700 for the requirements for pre-installation conferences for the building envelope.

E. Prepare agenda, preside at conference, record minutes and distribute copies within two days after conference to participants.

F. Review conditions of installation, preparation and installation procedures, and coordination with related work.

G. Schedule pre-installation conferences to occur immediately before or after the agreed upon day / time for progress meetings.

H. Some pre-installation conferences can be combined if the scope of work is related and the combined meeting is agreed upon by the Architect and Owner Representative(s).

PART 2 PRODUCTS (NOT USED)

PART 3 EXECUTION (NOT USED)

END OF SECTION

REQUEST FOR INFORMATION

TO: BCRA
2106 Pacific Avenue, Suite 300
Tacoma, WA 98402

ATTN: _____ **RFI #** _____

PROJECT NAME: Port of Everett – Wine Walk Building A12

PROJECT NUMBER: 23045.00.00

REFERENCE DRAWING OR SPEC: _____

SUBJECT OF RFI: _____

DESCRIPTION:

CONTRACTOR: _____ **RESPONSE REQUESTED BY (DATE):** _____

BY: _____ **DATE:** _____

RESPONSE:

A/E: _____

BY: _____ **DATE:** _____

COPIES TO: _____

This is not an authorization to proceed with work involving additional cost and / or time. Contractor shall obtain approval / authorization *prior to* proceeding with this work if the response in this RFI will result in additional cost and / or time.

FOUR-WEEK CONSTRUCTION SCHEDULE

PROJECT TITLE: Port of Everett – Wine Walk Building A12	BCRA Project No.: 23045.00.00 DATE:
FOUR-WEEK SCHEDULE Period: / / To: / /	CONTRACTOR: SUPT: PREPARED BY:

ACTIVITY	% COMPL. TO DATE	WHO	DATE	Previous Work Week							Week 1						
			DAY	M	T	W	T	F	S	S	M	T	W	T	F	S	S

FOUR-WEEK CONSTRUCTION SCHEDULE

PROJECT TITLE: Port of Everett – Wine Walk Building A12	BCRA Project No.: 23045.00.00 DATE:
FOUR-WEEK SCHEDULE Period: / / To: / /	CONTRACTOR: SUPT: PREPARED BY:

ACTIVITY	% COMPL. TO DATE	WHO	DATE	Week 2							Week 3						
			DAY	M	T	W	T	F	S	S	M	T	W	T	F	S	S

DAILY WORK LOG

DATE

Contractor Name

Address

Address

Contact Name

Phone

Fax

Email

Job Name

Address

Address

Report No. _____

Work Day _____ of _____

Calendar Days _____ of _____

Weather _____ Temp _____ Rain _____ Wind _____

BASE BID WORK

General Contractor Name - Personnel

Field	No. Employees	Hours	Activity (Provide work area and activity.)
Superintendent			
Assist SI			
Carp Foreman			
Carpenter			
Labor Foreman			
Laborer			
Safety			

Admin	No. Employees	Hours	Activity (Provide work area and activity.)
PM			
Assist PM			
Proj. Eng.			
Total			

Subcontractors - Personnel

	No. Employees	Hours	Activity (Provide work area and activity.)
Sub Name			
Sub Name			
Sub Name			
Sub Name			
Sub Name			
Sub Name			
Sub Name			
Sub Name			
Sub Name			
Sub Name			
Total			

EQUIPMENT DATA: (Indicate equipment items, other than hand tools, at job site; indicate hours used.)

CHANGE ORDER WORK

General Contractor Name - Personnel

Field	No. Employees	Hours	Activity (Provide work area and activity.)
Superintendent			
Assist SI			
Carp Foreman			
Carpenter			
Labor Foreman			
Laborer			
Safety			

Admin	No. Employees	Hours	Activity (Provide work area and activity.)
PM			
Assist PM			
Proj. Eng.			
Total			

Subcontractors - Personnel

	No. Employees	Hours	Activity (Provide work area and activity.)
Sub Name			
Sub Name			
Sub Name			
Sub Name			
Sub Name			
Sub Name			
Sub Name			
Sub Name			
Sub Name			
Sub Name			
Total			

EQUIPMENT DATA: (Indicate equipment items, other than hand tools, at job site; indicate hours used.)

DELIVERIES: (Note equipment and material deliveries made to job site. Indicate whether or not these items are in compliance with project documents, shop drawings, approved submittals, etc.)

SITE VISITORS: (Owner, Architect, Engineers, Sub Supervisory Personnel, etc.)

INSPECTIONS AND TESTING: (Identify inspections, special inspections and testing. Identify initial or re-inspection. Indicate items in non-

SAFETY: (Identify any safety issues that occurred and action taken.)

WORK PROGRESS: (Identify work tasks completed and progress of on-going tasks. Breakdown by trade.)

REMARKS: (Note any conflicts with project documents or that need further attention / investigation. Any other pertinent items.)

By signing below, I certify that the above is true to the best of my ability and knowledge:

Superintendent / PM

Date

SECTION 01 3215

CONSTRUCTION SCHEDULE

PART 1 GENERAL

1.01 RELATED DOCUMENTS

A. Drawings and general provisions of the Contract, including General Conditions, Supplementary Conditions and Divisions 00 and 01 Specification Sections, apply to work of this section.

1.02 SECTION INCLUDES

A. Administrative and Procedural Requirements for the Contractor's Construction Schedule.

1.03 GENERAL

A. The intent of the Construction Schedule is to assist the Contractor in planning and execution of the Work in a timely manner and assist the Contractor, Architect and Owner in monitoring the construction progress for the purpose of coordination, communication, evaluation of Applications and Certificates for Payment, and evaluation of time extension requests.

B. This section supplements the General Conditions and Supplementary Conditions with additional schedule requirements, where conflicts exist, the most restrictive requirement shall govern.

C. Any plan by the Contractor to complete the Work or any part of the Work earlier than any contract required milestone or specific completion date shall not be construed as creating any responsibility or liability for the Owner or Architect should their actions, or lack thereof, prevent the Contractor from achieving the planned early completion. The Owner and Architect shall not be liable to the Contractor for any costs or other damages if the Contractor is unable to achieve early completion of the Work before a milestone or completion date.

D. Time is of the essence; the Owner needs the Work completed within the times listed so that they can occupy the building. Provide the necessary management, equipment and manpower, including any overtime, double-shifting, or special work schedules, required to achieve completion of the Project within the times listed in the Completion Schedule indicated in Section 01 1100. Costs related to overtime, double-shifting or special work schedules required to complete work by the indicated substantial completion dates shall be included in the Bid amount.

E. Float Time: Float time is the amount of time between the earliest start date and the latest start date, or between the earliest finish date and the latest finish date of a chain of activities on the CPM Schedule. Float time belongs to the Project and is not for the exclusive use or benefit of either the Contractor or the Owner; float time may be used by either the Contractor or Owner for offsetting delays. Use of float suppression techniques such as preferential sequencing, special lead / lag logic restraints, zero total or free float constraints, extended activity times or imposed dates shall be cause for rejection of the Construction Schedule or any revisions or updates.

F. Scheduling Personnel: Contractor's shall employ scheduling personnel or consultant with a minimum of five (5) years of experience using the proposed scheduling software on projects of similar size and scope. If requested, provide a list of scheduling experience with copies of the schedules.

G. Schedule shall anticipate and include sufficient float time for weather dependent work tasks to allow for any delays due to normal inclement weather (defined as any inclement weather within the ten-year average of accumulated record mean values from climatological data compiled by the National Oceanic and Atmospheric Administration (NOAA), for the locale of the Project, over the full duration of the Contract Time).

1.04 CONSTRUCTION SCHEDULE

A. Construction Schedule:

1. Schedule Methodology: Critical Path Method (CPM) for the planning, scheduling and reporting of the work required by this contract.

2. Schedule Type: Precedence Diagramming Method (PDM).

3. Acceptable Software Programs:

   a. Microsoft Project.

   b. Primavera Project Planner.

4. Schedule Sheet Size: 11-inches x 17-inches preferred if readable, no larger than 24-inches x 36-inches.

5. Schedule Contents: Schedule shall contain the following information:

   a. Task ID number (numbered in ascending order, (e.g. 1, 2, 3, 4, etc.)

   b. Task Name (activity), provide a two or three word description of each activity; identify each activity with the applicable Specification Section number (e.g. Cast-in-Place Concrete – 03 3000).

   c. Task Duration (e.g. 10 days).

d. Early Task Start Date (e.g. Mon 7/22/21).

e. Late Task Start Date (e.g. Mon 7/29/21).

f. Early Task Finish Date (e.g. Mon 7/22/21).

g. Late Task Finish Date (e.g. Mon 7/29/21).

h. Float Time (e.g. 7 days).

i. Predecessor Tasks.

j. Successor Tasks.

k. Calendar: List the Weeks, Months and Year(s) across top of each page of the schedule. Show a graphic task duration bar indicating the start and finish date corresponding to the calendar for each task.

B. Schedule Requirements: Include the following requirements:

1. List every work activity required to complete the Work in the Task Name column and include the following:

a. Task Name shall describe individual work activities in a defined area of the Project, not multiple work activities for the entire project, e.g. underslab plumbing rough-in – west wing instead of plumbing for the entire project. Provide as many activities as necessary to clearly show how the Project will be constructed within the time allowed.

b. Include completion and milestone dates as specified in Section 01 1100.

c. Include dates for submission of each submittal to Architect for review as required to assure materials / products / systems will be on site when required to allow conformance to the Project completion and milestone dates. When Architect's review time is critical to the Project completion schedule, identify the review return dates in the schedule.

d. Indicate date required for selection of colors and finishes as applicable.

e. Include product delivery dates, including those furnished and / or installed by separate contractors or the Owner.

f. Show dates when application for separate permits (i.e. fire alarm, fire sprinkler, etc.) will be made and when permit will be received.

g. Include milestone dates for roof dry-in by phase / area.

h. Include start and finish dates for initial building dry out by phase / area as specified in Section 01 7343.

i. Include milestone dates for completing an airtight and watertight exterior envelope by phase / area to allow building interior temperature and humidity control as required for building dry out.

j. Include dates for start and completion of commissioning.

k. Include date of the pre-submittal meeting for the closeout documents (refer to Section 01 7700).

l. Include dates for Punch List review and Contractor's completion of Punch List items.

m. Show dates for pre-cover inspections and final inspections required by authorities having jurisdiction.

n. Include dates for preparation and submission of closeout documents. Show Architect's review time and resubmittal of corrected manuals and drawings. Refer to Section 01 7700 for additional requirements.

o. Includes dates for Owner Trainings.

2. Keep individual tasks listed to short durations with limited scope of work (one to two weeks maximum) unless the task is dependent on several activities of longer duration.

3. Each task shall have a corresponding time duration bar to the right of the columns graphically showing the duration of each activity on the calendar.

4. Show complete sequence of construction by activity, identifying work of separate contractors or Owner required to complete the Work.

5. Graphically indicate each task that is on the critical path for completion (by color or pattern) on the task duration bar. Show the interrelationship of each critical path task to other critical path tasks by drawing arrows between the task duration bar finish and start points.

6. Include sufficient additional float time in the duration of those specific activities that are weather dependent (such as: underground utilities, pavement, painting, etc.) to prevent delaying critical path activities due to normal inclement weather based on the time of year the tasks are being accomplished and the corresponding historic weather data averages for those dates.

   a. Weather related float time shall be calculated after late task finish date and shall be included in the critical path time calculation.

   b. Identify additional weather-related time allowed in the duration or include as a separate task directly under the affected work task.

1.05 UPDATING SCHEDULES

A. Update the Construction Schedules monthly to reflect actual work activity dates accomplished and any revised work activity dates.

B. Maintain Construction Schedules to record actual start and finish dates of activities as they are completed.

C. Indicate progress of each activity at the time of the revision date. Update diagrams to graphically depict current status of Work.

D. Indicate revision date on revised schedule.

E. Show changes occurring since previous Schedule submission such as:

1. Any major changes in scope;

2. Activities modified since previous submission;

3. Revised projections for progress and completion, as applicable;

4. Any other identifiable changes.

F. Provide narrative report as needed to define:

1. Problem areas; anticipated delays; and impact on schedule.

2. Corrective action to be taken by the Contractor to get the Project back on schedule. This report will define how and when the Contractor will accomplish this.

1.06 RECOVERY SCHEDULE

A. Whenever completion of any critical path activity(s) extends beyond its late finish date or in any way jeopardizes timely completion of a Contract milestone date or completion date the Contractor shall prepare a recovery schedule showing how work activity start and finish dates will be revised to allow the completion of milestone and completion dates on schedule.

B. Recovery schedule shall be prepared as soon as possible after discovery of any delay affecting critical path activity(s), but not longer than seven (7) days.

1.07 SUBMITTALS

A. Prepare and submit proposed Construction Schedule to Owner and Architect as soon as possible after Notice to Proceed and prior to first Application for Payment.

1. Submit schedule in digital computer format(s) acceptable to the Architect and Owner.

B. Submit updated schedule with each Application for Payment or more frequent if required.

C. Applications for Payment will not be processed until schedule is in conformance with requirements of the specifications.

1.08 DISTRIBUTION

A. Distribute copies of Construction Schedule to project site file, subcontractors, suppliers, Owner, Architect and other concerned parties.

B. Instruct recipients to promptly report, in writing, problems anticipated by projections shown in schedules.

C. Construction Office: Post a copy of the current Construction Schedule on the wall in the construction office where the job meetings will be held; suspend a moveable vertical line on the current date to facilitate review and discussion of schedule progress and issues at weekly job meetings.

PART 2 PRODUCTS (NOT USED)

PART 3 EXECUTION (NOT USED)

END OF SECTION

SECTION 01 3233

CONSTRUCTION PHOTOGRAPHS

PART 1 GENERAL

1.01 RELATED DOCUMENTS

A. Drawings and general provisions of the Contract, including General Conditions, Supplementary Conditions and Divisions 00 and 01 Specification Sections, apply to work of this section.

1.02 SECTION INCLUDES

A. Construction photography of work-in-progress and concealed as-built construction.

1.03 GENERAL

A. Provide photographs taken from locations coordinated with Owner's Representative.

B. Photographer: Experienced in taking construction photography.

C. Equipment: Photos shall be taken with digital camera equipment capable of meeting image size requirements listed below. Utilize a full range of lenses including wide angle and telephoto as appropriate.

D. Video images may be acceptable for certain operations. Confirm with Project Manager.

PART 2 PRODUCTS

2.01 CONSTRUCTION PHOTOGRAPHS

A. Provide photographs in the form listed below.

2.02 PHOTOGRAPHIC SUBMITTALS

A. Photographs shall be submitted to the Owner and Architect monthly.

B. Minimum JPEG image size shall be 1280 X 960 pixels.

C. Photographs shall be representative of project progress, showing major work and critical concealed conditions.

D. Submit each month's photographs with each monthly application for payment and schedule update.

E. Submit photos as PDF document with a maximum of 4 photos per page. Each photo shall have the following information noted below or next to it:

1. Each photograph shall be dated, labeled and be provided with a brief description identifying the location and direction the photo was taken.

2. Date stamp shall use the month / date / year format.

PART 3 EXECUTION

3.01 CONSTRUCTION PHOTOGRAPHS

A. Take construction photographs beginning at Notice to Proceed and continuing through Substantial Completion.

B. Take minimum of 40 photographs each month. Take additional photographs as needed to fully document the Work. Document the following with photographs:

1. As-built concealed conditions that may benefit the Owner's future maintenance and operations activities. Take photographs (with a reference point) prior to cover or concealment.

2. Underground pipe arrangements / valves / structures.

3. Under-slab utility rough-in.

4. Wall cavity utility routing prior to cover, take sequential photos of each length of framed wall after mechanical and electrical rough-in is completed.

5. Above ceiling installation after ceiling support system installed, but prior to cover.

6. Exterior elevations from each side / facet of building, take a series of photos from the same location each month.

7. Site work, take a series of photos from the same location each month.

C. The photograph record described above shall be considered minimum and shall not be deemed to limit the quantity or quality of the photographic record.

END OF SECTION

SECTION 01 3300

SUBMITTALS

PART 1 GENERAL

1.01 RELATED DOCUMENTS

A. Drawings and general provisions of the Contract, including General Conditions, Supplementary Conditions and Divisions 00 and 01 Specification Sections, apply to work of this section.

1.02 SECTION INCLUDES

A. Administrative and Procedural Requirements for Project Submittals.

1. Subcontractor and Supplier List.
2. Low VOC Submittal Documentation
3. Shop Drawings.
4. Product Data.
5. Samples.
6. Manufacturer's Certificates.
7. Calculations.

1.03 SUBMITTAL PROCEDURES

A. Schedule submittals to expedite the Project. Transmit submittals in accordance with Construction Schedule and in such sequence to avoid delay in the Work. Coordinate submission of related items with schedule.

B. Electronic Submittals – Format: Shop Drawings, Product Data, Certificates, Warranties and any similar submittals, other than physical samples, shall be provided as digital submittals in PDF format suitable for sending via electronic mail or downloaded from internet file transfer website.

1. Submittal shall be submitted as one PDF and each item bookmarked to allow for efficient review.
2. Organize submittals per specification section. Include all items listed in each specification section to facilitate one review by the Design team per specification section.
    a. Partial / incomplete submittals will be returned as “Not Reviewed”.

3. PDF security permissions shall be formatted to allow printing, reviewing and editing functions by Architect and Owner using any PDF compatible computer program.

4. When electronic submittals are required to be accompanied by a physical sample, the submittal will not be returned until both the electronic submittal and physical sample are reviewed.

C. Contractor Shall:

1. Review submittal for completeness before sending to Architect for review. Submittal shall have each of the items noted under the Submittals section in each specification section (Product Data, Drawings, Samples, Certifications, etc.).

   a. Incomplete submittals will be returned “Not Reviewed” by Architect.

2. Review and approve each submittal prior to submission to Architect.

3. Include a review priority for Architect if multiple and / or large submittals are transmitted to Architect in the same week.

4. Reproduce and distribute copies of reviewed submittals to concerned parties. Instruct parties to promptly report any inability to comply with provisions. Pay all costs for reproduction, distribution and materials.

5. Coordinate submittals into logical groupings to facilitate inter-relation of the several items:

   a. Finishes which involve Architect selection of colors, textures or patterns.

   b. Associated items which require correlation for efficient function or for installation.

6. Identify, in writing, variations from Contract Documents and product or system limitations which may be detrimental to successful performance of the completed Work.

7. Accompany submittals with transmittal letter containing:

   a. Date.

   b. Project title and number.

   c. Contractor's name and address.

   d. Number of copies of Shop Drawings, Product Data and Samples submitted.

   e. Identification of submittal as it relates to:

1) Subcontractor / Supplier / Manufacturer:

a) Name.

b) Address.

c) Telephone number.

d) Representative's name.

2) Detail number and location in Construction Documents.

3) Specification reference number and paragraph.

4) Applicable Standards.

5) Finishes.

6) Identification of deviations from Contract Documents.

D. Additional Information Required:

1. Relation to adjacent structure or materials.

2. Fabrication methods, assembly, special installation requirements, accessories, fasteners and other pertinent information.

3. Field dimensions, clearly identified.

4. Coordination with other trades. Stamped and signed by affected trades.

E. Distribution:

1. Send submittals to Architect via electronic mail or from internet file transfer website.

2. Architect will return reviewed submittals to Contractor and Owner via electronic mail or Architect’s internet file transfer system.

3. Send copy of Architect reviewed submittal to Subcontractors / Suppliers.

1.04 SUBCONTRACTOR AND SUPPLIER LIST

A. Prior to submission of First Application for Payment, submit complete list of subcontractors and suppliers to be used for the Work. Provide specification section identification number, addresses and telephone numbers for each listed subcontractor and supplier providing materials.

1.05 LOW VOC DOCUMENTATION

A. Provide Low VOC submittal documentation. The following shall be acceptable documentation:

1. Product cut sheets with company logo.

2. Material Safety Data Sheets with company logo.

3. Signed attestations (certification) on company letter head.

4. Official literature from manufacturer.

1.06 SHOP DRAWINGS

A. Present in clear and thorough manner. Title each drawing with Project name and number; identify each element of drawings by reference to sheet number and detail, schedule or room number of Contract Documents.

B. Identify field dimensions; show relation to adjacent or critical features or Work or products.

C. Do not submit freehand drawings.

D. Drawings shall be drafted either by hand using pen and a straight edge so that the drawings are clear and easy to read, or by computer using a drafting program like AutoCADD or REVIT.

E. Shop Drawings that are reproductions of the Contract Document Drawings shall be returned without review for resubmittal. The Contract Document Drawings are not Shop Drawings. Shop Drawings shall be drafted by the company submitting the Shop Drawings.

F. Shop Drawings requiring Code Agency Approval: Submit on format and media required by Approval Agency. Include information required by Project Documents and Approval Agency.

1.07 PRODUCT DATA

A. Submit only pages which are pertinent; mark each copy of standard printed data to identify pertinent products, referenced to Specification Section and Article number. Show reference standards, performance characteristics and capacities; wiring and piping diagrams and controls; component parts; finishes; dimensions; and required clearances.

B. Modify manufacturer's standard schematic drawings and diagrams to supplement standard information and to provide information specifically applicable to the Work. Delete information not applicable.

1.08 SAMPLES

A. Submit two (2) samples of the specified color and texture for each product unless specified otherwise in individual specification sections; samples will be retained by Architect.

B. Where a specific color has not been specified, submit full range of manufacturer's standard and special finishes except when more restrictive requirements are specified, indicating colors, textures and patterns, for Architect selection.

C. Label each sample with identification required for transmittal letter.

1.09 MANUFACTURER'S CERTIFICATES

A. When specified in individual specification sections, submit manufacturer's certificate to Architect for review.

B. Indicate material / product conforms to or exceeds specified requirements. Submit supporting reference date, affidavits and certifications as appropriate.

C. Certificates may be recent or previous test results on material / product, but must be acceptable to Architect / Engineer.

1.10 CALCULATIONS

A. When specified in individual specification sections, submit calculations to Architect for review.

1.11 CONTRACTOR REVIEW

A. Coordinate submittals with requirements of the Work and Contract Documents.

B. Apply Contractor's stamp with signature. The submittal signed by the Contractor certifies that the Contractor has reviewed the submittal for accuracy, completeness and compliance with the Contract Documents. It also certifies that the Contractor has verified products required, field dimensions, adjacent construction work, and coordination of information, in accordance with the requirements of the Work and Contract Documents. Submittals without Contractor's stamp and signature are rejected. Notify Architect in writing at time of submittal, of any deviations from requirements of Contract Documents.

1.12 RESUBMITTALS

A. Revise and resubmit submittals as required, identify changes made since previous submittal.

B. Shop Drawings, Product Data, and Calculations:

1. Revise initial shop drawings, product data, or calculations and resubmit as specified for the initial submittal.

2. Indicate any changes which have been made including those requested by the Architect.

C. Samples: Submit new samples as required.

D. Architect reserves the right to charge the Contractor for reviewing non-responsive resubmittals. The charge for time spent reviewing non-responsive resubmittals will be based on the Architect's or their consultant's standard hourly billing rates for the time they spend reviewing the non-responsive submittal. The amount will be charged as a deductive change order.

1.13 ARCHITECT REVIEW

A. Architect or their consultant(s) will review shop drawings, product data, calculations and samples and return submittals to Contractor.

B. Architect's review is qualified by the following language included on the review stamp: "This review is only for general conformance with design concept of the Project and general compliance with the information given in the Contract Documents. Corrections or comments made on the shop drawings during this review do not relieve the Contractor from compliance with the requirements of the plans and specifications. Approval of a specific item shall not include approval of an assembly of which the item is a component. Contractor is responsible for: dimensions to be confirmed and correlated at the jobsite; information that pertains solely to the fabrication processes or to the means, methods, techniques, sequences and procedures of construction; coordination of his or her Work with that of all other trades; and for performing all work in a safe and satisfactory manner".

1. Any action shown is subject to Contract Document's requirements. Architect will mark the review submittal in one of the following boxes on the review stamp:

- ❑ Reviewed
- ❑ Furnish as Corrected
- ❑ Rejected
- ❑ Revise and Resubmit
- ❑ Submit Specified Item

C. Architect / Engineer review of individual or separate items does not constitute review of assembly in which it functions.

PART 2 PRODUCTS (NOT USED)

PART 3 EXECUTION (NOT USED)

END OF SECTION

SECTION 01 4500

QUALITY CONTROL

PART 1 GENERAL

1.01 RELATED DOCUMENTS

A. Drawings and general provisions of the Contract, including General Conditions, Supplementary Conditions and Divisions 00 and 01 Specification Sections, apply to work of this section.

1.02 SECTION INCLUDES

A. Administrative and Procedural Requirements for Project Quality Control.

1.03 REFERENCES

A. Conform to the requirements of the referenced standards referred to in individual specification sections. Reference standards shall be the edition current as of the date of the Contract Documents.

B. Obtain copies of reference standards that govern work performed on site.

C. Should specified reference standards conflict with Contract Documents, the most stringent and restrictive requirement shall prevail except where Architect / Engineer provides other direction; request clarification from Architect before proceeding.

D. The contractual relationship of the parties to the Contract shall not be altered from the Contract Documents by mention or inference otherwise in any reference document.

E. ADA Standards - 2010 ADA Standards for Accessible Design.

F. ICC A117.1 - Accessible and Usable Buildings and Facilities.

1.04 CONTRACTOR'S QUALITY ASSURANCE / CONTROL OF CONSTRUCTION

A. Employ / assign quality control personnel to monitor the work of this project for conformance to the requirements of the Contract Documents and to good construction practices.

1. Prior to starting their work, review the scope of work, performance requirements, materials and workmanship requirements with each trade and subcontractor.

2. Review materials when delivered to the site for conformance to the Contract Documents and submittals.

3. Monitor work in progress for conformance to the Contract Documents and submittals.

B. Contractor is solely responsible for managing and controlling the quality of the work and conformance with the requirements of the Contract Documents.

C. Monitor quality control over suppliers, manufacturers, products, services, site conditions and workmanship, to produce Work of specified quality.

D. Comply with specified standards as a minimum quality for the Work except when more stringent tolerances, codes, or specified requirements indicate higher standards or more precise workmanship.

E. Work shall be performed by trained and experienced workers qualified to produce workmanship of specified quality.

F. Secure Products in place with positive anchorage devices designed and sized to withstand stresses, vibration, physical distortion and disfigurement.

G. Inspections and reports issued by special inspector or testing laboratory do not relieve the Contractor from his responsibility to construct Work in conformance with the requirements of the Contract Documents.

H. Contractor is responsible to review and confirm that substrate construction, site conditions and work by others complies with requirements of Contract Documents and manufacturer's requirements for subsequent work prior to installation or cover.

1.05 ACCESSIBILITY REQUIREMENTS

A. Accessibility Requirements: The accessibility requirements shown on the Drawings are required for conformance with the ADA Standards and ICC A117.1. Strict conformance with the accessibility requirements shown on the Drawings is required for this project; non-conforming work will require correction at Contractor's expense.

1. A copy of ICC A117.1 shall be kept on the job site for reference during construction and reviewed to provide a full understanding of each accessible design requirement.

2. Construction Tolerances: Typical construction tolerances common to the construction industry are not acknowledged or permitted by the ADA Standards and ICC A117.1. Therefore, Work must be constructed within the strict accessibility requirements without any allowable construction tolerances.

B. Submittal Review: Review submittals for conformance with the accessibility requirements of ICC A117.1 shown on the Drawings; mark up submittals that have incorrect or missing accessibility requirements.

C. Review with Workers: Review the accessibility requirements of ICC A117.1 and the Drawings with workers performing work that is required to conform to the accessibility requirements of ICC A117.1.

D. Monitoring: Monitor the work of this project for compliance with the accessibility requirements of ICC A117.1 shown on the Drawings.

E. Inspection: Inspect the completed work that is required to conform to accessibility requirements for conformance with ICC A117.1. Inspection shall require accurate measurements to confirm that dimensions, slopes and relationships shown on the Drawings have been constructed in accordance with accessibility requirements.

1.06 MOCK-UP

A. When required in individual specification sections, Contractor shall provide a mock-up as required by the individual specification section.

B. Assemble and erect specified items, with specified attachment and anchorage devices, flashings, seals and finishes. Erect complete full-scale mock-up of assembly at Project site.

C. Some mock-ups may be combined if the scope of work is related and the combined mock-up is agreed upon by the Architect and Owner Representative(s).

D. Where mock-up is not a permanent part of the construction, remove at agreed upon time. Do not remove mock-up without Architect's approval.

1.07 INSPECTION AND TESTING AGENCY SERVICES

A. Owner will appoint, employ and pay for services of an independent inspection and testing agency to perform inspection and testing.

B. The inspection and testing agency will perform inspections, tests and other services specified in individual specification sections, as noted on the Structural Drawings and as required by the Owner or Architect.

C. Reports will be submitted by the inspection and testing agency to the Authority Having Jurisdiction, Architect, Engineer, Contractor and Owner, indicating observations and results of tests and indicating compliance or non-compliance with Contract Documents.

D. Contractor's Responsibilities:

1. Cooperate with inspection and testing agency personnel and facilitate their inspection / testing work on the project site.

2. Coordinate the work and inspection / testing schedule directly with inspection and testing agency.

3. Notify inspection and testing agency and Architect 24 hours minimum prior to expected time for operations requiring inspection / testing.

4. Furnish inspection and testing agency with reviewed submittals, including concrete design mix, etc.

5. Furnish safe access to the work requiring testing / inspection, samples of materials, equipment, tools, storage, electrical power and assistance as requested.

6. Make arrangements with inspection and testing agency and pay for additional samples and tests required for Contractor's use.

7. Correct / replace any work found by the inspection and testing agency to be not in conformance with the Contract Documents.

E. Site visits and retesting required because of scheduling problems caused by the Contractor and / or non-conformance to specified requirements shall be performed by the same inspection and testing agency. Payment for retesting will be charged to the Contractor by deducting inspection or testing charges from the Contract Sum / Price.

1.08 MANUFACTURER'S FIELD SERVICES AND REPORTS

A. When specified in individual specification sections or when required by field installation problems, questions or concerns, require material or product suppliers or manufacturers to provide qualified staff personnel to visit the job site and provide technical consultation, observe site conditions, conditions of surfaces and installation, quality of workmanship, start-up of equipment, test, adjust, and balance of equipment as applicable, and to initiate instructions.

B. Representative to submit written report to Architect describing testing observations and recommendations. Site decisions or instructions given to applicators or installers that are supplemental or contrary to manufacturer's written instructions shall also be included.

C. Submit report in duplicate within 30 calendar days of observation to Architect for review.

1.09 MANUFACTURER'S INSTRUCTIONS

A. Comply with manufacturer's installation / assembly instructions in full detail, including each step-in sequence.

B. Substrates, Site Conditions and Work By Others shall conform to manufacturer's requirements:

1. Inspect substrate, site conditions and work by others for conformance to manufacturer's requirements for material and condition prior to starting any work.

2. Do not start work if substrate construction, site conditions or work by others does not comply with manufacturer’s recommendations; report any problems to Contractor and Architect.

3. Start of work / installation indicates installer’s acceptance of substrate, site conditions and work by others as meeting manufacturer’s requirements.

C. Should manufacturer's instructions conflict with Contract Documents, request clarification from Architect before proceeding.

1.10 MANUFACTURER'S CERTIFICATES

A. When required in individual specification sections, submit manufacturer's certificate. Refer to Section 01 3300, paragraph entitled "Manufacturer's Certificates."

1.11 BUILDING AIR BARRIER TESTING

A. Refer to Section 07 2700 for the testing requirements of the Building Air Barrier System.

PART 2 PRODUCTS (NOT USED)

PART 3 EXECUTION (NOT USED)

END OF SECTION

SECTION 01 5000

CONSTRUCTION FACILITIES AND TEMPORARY CONTROLS

PART 1 GENERAL

1.01 RELATED DOCUMENTS

A. Drawings and general provisions of the Contract, including General Conditions, Supplementary Conditions and Divisions 00 and 01 Specification Sections, apply to work of this section.

1.02 SECTION INCLUDES

A. This section specifies requirements for the Contractor's construction facilities and temporary controls, including, but not limited to the following:

1. Protection of Existing Utilities.
2. Disposal of Waste Materials.
3. Temporary Electricity.
4. Temporary Lighting.
5. Temporary Telephone Service.
6. Temporary Water Service.
7. Temporary Sanitary Facilities.
8. Temporary Heat, Ventilation and Dehumidification.
9. Temporary Barriers and Traffic Control.
10. Temporary Fencing.
11. Water Control
12. Temporary Storage.
13. Exterior Enclosures.
14. Protection of Existing and Installed Work.
15. Securty.
16. Access Roa
17. Progress Cleaning.

18. Environmental Procedures.

19. Field Office.

20. Machinery and Equipment Restrictions.

21. Removal of Utilities, Facilities and Controls.

22. Emergency Contacts.

23. Construction Parking.

1.03 DESCRIPTION

A. This section specifies minimum actions required. Other actions may be specified elsewhere in the Contract Documents, manufacturer's literature, and governing regulations.

B. Nothing in this section is intended to limit types or amounts of construction facilities and temporary controls.

C. No omission from this section will be recognized as a temporary activity that is not required to complete the Work.

1.04 REFERENCES

A. References shall be the edition current as of the date of the Contract Documents.

B. OSHA - Occupational Safety and Health Administration.

C. WISHA - Washington Industrial Safety and Health Act.

1.05 PROTECTION OF EXISTING UTILITIES

A. Contractor shall confirm the location, elevation and layout of existing utilities before start of utility work, making any connections or doing any work that could affect any existing utilities – refer to Section 02 1725 for additional requirements.

B. If unknown utilities are encountered in the course of construction, protect them from damage and notify the utility Owner immediately. Do not remove or disable any unknown existing utility without the approval of the utility Owner.

C. In the event utilities are damaged during construction, temporary services and / or repairs must be made immediately to maintain continuity of services at Contractor's expense.

1.06 DISPOSAL OF WASTE MATERIALS

A. Dispose of all refuse and waste material, including excess earth from excavation, off Owner's property. Do not stockpile waste material on Owner's property. Immediately clean up any spilled material.

B. Clean trash and debris from work area daily. Keep work area, site, and adjacent properties free from accumulations of waste materials, rubbish and windblown debris resulting from construction operations.

C. Provide on-site containers for collection of waste materials, debris and rubbish. Periodically remove waste from the site.

D. Waste Construction Liquid Disposal: Provide portable containers for disposal of any waste construction liquids or fluids that are generated by or needed for the construction work. Do not dump any waste construction liquid or fluid (including oil, solvent, cleaning compound, paint, plaster mud, brush and tool cleanup water, etc.) onto the ground or down the building sanitary or storm drain systems or anywhere on the site. Dispose of contents of all portable containers off site daily.

E. Dispose of all flammable, hazardous, and toxic waste materials daily. Storage of these materials will not be permitted on the interior of building.

F. Locate dumpster within the fenced Work Area or in another secure location if construction fencing is not required for the Project.

1. Dumpsters shall have a hinged lid that shall be closed and locked at the end of each day's work.

1.07 TEMPORARY ELECTRICITY

A. Provide and pay for temporary electrical service or temporary generator power sized to accommodate electrical power requirements for the duration of the construction, coordinate temporary connection with electrical utility.

1. Conform to all applicable code requirements and obtain electrical permit.

B. Provide temporary feeders from electrical service with branch wiring, distribution boxes and power outlets as required for construction operations. Provide OSHA / WISHA approved flexible power cords as needed.

C. Provide temporary service disconnect and over current protection at convenient location.

D. Pay permit, connection and electrical power usage costs for temporary power, if used, until Substantial Completion is achieved.

E. Permanent convenience receptacles may be utilized during construction provided they are replaced if damaged or defaced in any way.

1.08 TEMPORARY LIGHTING

A. Provide and maintain temporary lighting for construction operations. Provide sufficient lighting to ensure proper workmanship everywhere.

B. Provide branch wiring from power source to distribution boxes with lighting conductors, pigtails, and lamps as required to do the Work safely and at the light levels required by each trade to produce work conforming to the quality specified.

C. Maintain lighting and provide routine repairs.

1.09 TEMPORARY TELEPHONE SERVICE

A. Superintendent shall carry a cellular phone to allow voice communication at all times.

1.10 TEMPORARY WATER SERVICE

A. Provide, maintain, and pay for suitable quality temporary water service or source required for construction operations. Pay all costs of connection, metering, piping and / or trucking as required to perform the work.

B. Extend branch piping with outlets located so water is available by hoses with threaded connections.

C. Pay all connection and water usage costs for temporary water service.

1.11 TEMPORARY SANITARY FACILITIES

A. Provide and maintain temporary OSHA / WISHA required portable toilet facilities and enclosures; in sufficient numbers and locations to accommodate the number of workers on site. Maintain daily in clean and sanitary condition.

1.12 TEMPORARY HEAT, VENTILATION AND DEHUMIDIFICATION

A. Specified in Section 01 7343.

1.13 TEMPORARY BARRIERS AND TRAFFIC CONTROL

A. Provide barriers to protect the public from any potentially unsafe conditions, and from damage from construction operations.

B. Provide protection for existing plant life designated to remain. Replace damaged plant life.

C. Protect non-owned vehicular traffic, stored materials, site and structures from damage.

D. Provide vehicular and pedestrian traffic control as appropriate for the work.

1.14 TEMPORARY FENCING

A. Temporary Construction Site Fencing: Provide 6 foot high temporary commercial grade chain link fencing as determined by the Contractor. for security, safety or protection of the public; equip with vehicular and pedestrian gates with locks.

1.15 WATER CONTROL

A. Grade site to drain. Maintain excavations free of water. Provide, operate and maintain pumping equipment.

B. Protect site from puddling or running water.

C. Provide settling basins and erosion control.

D. Protect any facilities on-site and off-site from damage due to uncontrolled water.

1.16 TEMPORARY STORAGE

A. Make whatever provisions are necessary to ensure the safe and weathertight protection of materials and equipment temporarily stored.

1.17 EXTERIOR ENCLOSURES

A. After the roof is installed and insulation or interior finishes are started, provide temporary, weathertight enclosure over any portion of the building exposed to the weather to prevent the structure and finishes from getting wet.

1.18 PROTECTION OF EXISTING AND INSTALLED WORK

A. Protect installed work. Provide special protection where specified in individual specification sections or as required to prevent any type of damage or defacement.

B. Provide temporary and removable protection for existing and installed products. Control activity in immediate work area to minimize damage.

C. Prohibit traffic or storage upon waterproofed or roofed surfaces. If traffic or activity is necessary, obtain recommendations for protection from waterproofing or roofing material manufacturer and install protection. Remove and replace waterproofing or roofing material damaged during the work.

D. Prohibit construction worker access to rooms and areas which do not have construction work. After work in any area or room is complete, prohibit further worker access.

E. Prevent any construction dust and dirt from entering the HVAC equipment and ductwork, computer equipment, electrical switchgear, building systems / equipment, smoke detectors or anything that will be adversely affected.

1.19 SECURITY

A. Provide site and building security as required to protect work in progress, stored materials, tools and equipment from vandalism and theft.

B. Lock up or block up all doors, windows and openings in building and lock any gates on the site each day prior to leaving the site to prevent unauthorized entry into the building or site.

C. Maintain site and building security until Substantial Completion when Owner takes responsibility for security.

1.20 ACCESS ROADS

A. Provide and maintain access to fire hydrants, free of obstructions. Do not block access roads or prevent emergency vehicles access to site.

B. Maintain the emergency vehicle access road on the site in good, drivable condition for any type of emergency vehicle as required by the City of Everett code and permit conditions.

1.21 PROGRESS CLEANING

A. Provide periodic cleaning to prevent any buildup or accumulation of construction debris in the building or on the site.

B. Pre-Cover Cleaning: Remove construction debris and vacuum clean dirt and dust from concealed spaces that will be enclosed or inaccessible after completion of the work, including concealed spaces within walls, shafts, attics, and void spaces.

C. Maintain building and site in a clean and orderly condition.

D. Remove waste materials, debris, and rubbish from building and site weekly and dispose off-site.

1.22 ENVIRONMENTAL PROCEDURES

A. Comply with all environmental and health safety regulations.

B. Burning on site is not permitted.

1.23 FIELD OFFICE

A. Office: Weathertight, with lighting, electrical outlets, heating, equipment, and equipped with sturdy furniture, plan rack and drawing display table.

B. Provide office large enough to comfortably accommodate weekly job site meetings, with table and chairs adequate for all attendees.

C. Provide computer(s) with current versions of Microsoft Word, Excel, and Adobe Acrobat compatible PDF software programs and internet connection for e-mail communication with Superintendent and Field Engineer.

D. Maintain office in organized and clean condition.

1.24 MACHINERY AND EQUIPMENT RESTRICTIONS

A. Equipment and Internal Combustion Engine Noise: The noise level of each vehicle or piece of equipment shall not be greater than 90 DB(A) at a distance of 50 feet as measured under noisiest operating conditions. Mufflers for stationary engines shall be hospital-area quality of silencing.

1.25 REMOVAL OF UTILITIES, FACILITIES AND CONTROLS

A. Remove temporary above grade or buried utilities, equipment, facilities, materials, etc.

B. Remove temporary underground installations to a minimum depth of 2 feet.

C. Clean and repair damage caused by installation or use of temporary work.

1.26 EMERGENCY CONTACTS

A. Provide Owner with two (2) emergency contact names (Superintendent and Project Manager), with home phone and cell phone numbers.

1.27 CONSTRUCTION PARKING

A. Construction workers shall park on the project site in locations designated by Contractor.

PART 2 PRODUCTS (NOT USED)

PART 3 EXECUTION (NOT USED)

END OF SECTION

SECTION 01 6000

PRODUCT REQUIREMENTS

PART 1 GENERAL

1.01 RELATED DOCUMENTS

A. Drawings and general provisions of the Contract, including General Conditions, Supplementary Conditions and Divisions 00 and 01 Specification Sections, apply to work of this section.

1.02 SECTION INCLUDES

A. Administrative and Procedural Requirements for Materials and Equipment related to:

1. Transportation and Handling.

2. Storage and Protection.

3. Product Options.

4. Substitutions.

1.03 PRODUCTS

A. Products: Means new material, machinery, components, equipment, fixtures and systems forming the work. Does not include machinery and equipment used for preparation, fabrication, conveying and erection of the work. Products may also include existing materials or components required for reuse.

B. Provide interchangeable components of the same manufacturer, for similar components.

C. Do not use materials and equipment removed from existing premises, except as specifically permitted by the Contract Documents.

1.04 TRANSPORTATION AND HANDLING

A. Transport and handle products in accordance with manufacturer's instructions.

B. Promptly inspect shipments to assure that products comply with requirements, quantities are correct, and products are undamaged.

C. Provide equipment and personnel to handle products by methods to prevent soiling, disfigurement or damage.

1.05 STORAGE AND PROTECTION

A. Store and protect products in accordance with manufacturer's instructions, with seals and labels intact and legible. Store sensitive products in weathertight, climate controlled enclosures.

B. For exterior storage of fabricated products, place on sloped supports, above ground.

C. Provide and pay for off-site storage and protection when site does not permit on-site storage or protection.

D. Cover products subject to deterioration with impervious sheet covering. Provide ventilation to avoid condensation.

E. Store loose granular materials on solid flat surfaces in a well-drained area. Prevent mixing with foreign matter.

F. Provide equipment and personnel to store products by methods to prevent soiling, disfigurement or damage.

G. Arrange storage of products to permit access for inspection. Periodically inspect to assure products are undamaged and are maintained under specified conditions.

1.06 PRODUCT OPTIONS

A. Products Specified by Reference Standards or by Description Only: Any product meeting those standards or description.

B. Products Specified by Naming One or More Manufacturers: Products of manufacturers named and meeting specifications, no options or substitutions allowed.

C. Products Specified by naming a Manufacturer “or approved equal”, or with a provision for Substitution Request: Submit a request for substitution for any manufacturer not named.

D. Products Specified by "or approved equal" to a Listed Manufacturer: Products with same function and similar quality and features to listed manufacturer.

E. Products Specified by "Similar To" a Listed Manufacturer: Products with same function and similar quality and features to listed manufacturer.

1.07 SUBSTITUTIONS

A. Architect will consider requests for Substitutions up ten (10) calendar days prior to bid opening date.

B. Substitutions may be considered after contract award only when a product becomes unavailable through no fault of the Contractor, or when the Owner deems it to be in the Owner's best interest to do so.

1. Substitutions proposed to allow timely delivery due to Contractor's failure to order material / equipment on time will not be considered.

C. Document each request with complete data substantiating compliance of proposed substitution with Contract Documents.

D. A request constitutes a representation that the Bidder / Contractor:

1. Has investigated proposed product and determined that it meets or exceeds the quality level of the specified product.

2. Will provide the same warranty for the Substitution as for the specified product.

3. Will coordinate installation and make changes to other Work that may be required for the Work to be complete with no additional cost to Owner.

4. Waives claims for additional costs or time extension that may subsequently become apparent.

5. Will reimburse Owner for review or redesign services associated with re-approval by authorities.

6. Has investigated and determined that the proposed substitution will meet code requirements.

E. Substitutions will not be considered when they are indicated or implied on shop drawing or product data submittals, if they have not been previously approved.

F. Substitution Submittal Procedure:

1. All substitution requests shall be accompanied with the Substitution Request Form completely filled out. Substitution Request Forms are bound in the Project Manual at the end of this specification section. Limit each request form to one proposed substitution.

2. Submit one complete set of substitution request forms and supporting data via e-mail or as required by the Owner.

3. Clearly indicate with red arrows on the supporting data the proposed substitution and accessories.

G. Substitution Review Procedure: Because of the number of substitution requests typically received before bidding and the coordination required to review these, the following procedures will apply:

1. Substitution requests received after the time specified in this Section will not be reviewed or listed in addenda.

2. Substitution requests will be evaluated and the request form will be annotated in the column marked "For Use by Architect." It will then be retained in the A / E's file.

3. The Substitution Request Form and submitted data will not be returned to the submitter. These forms are for the A / E's in-house use only.

4. Only approved substitutions will be listed on addenda. All proposed substitutions not listed on addenda shall be considered by the submitter and the Contractor as a non-acceptable substitution and shall not be used.

PART 2 PRODUCTS (NOT USED)

PART 3 EXECUTION (NOT USED)

END OF SECTION

SUBSTITUTION REQUEST FORM

TO: BCRA
2106 Pacific Avenue, Suite 300
Tacoma, WA 98402

PROJECT NAME: Port of Everett – Wine Walk Building A12

We hereby submit for consideration, the following product instead of specified item for above project:

Section: _____ **Paragraph:** _____ **Specified Item:** _____

Proposed Substitution: _____

Attach complete dimensional information and technical data including laboratory tests, if applicable.

Include complete information on changes to Drawings and / or specifications which proposed substitution will require for its proper installation.

Submit with request all necessary samples and substantiating data to provide equal quality, performance, and appearance to that which is specified. Clearly mark manufacturer's literature to indicate equality in performance. Differences in quality of materials and construction shall be indicated.

The undersigned states that the following paragraphs are correct:

1. The proposed substitution does not affect dimensions shown on drawings.

2. The undersigned will pay for changes to the building design, including engineering design, detailing and construction costs caused by the requested substitution.

3. The proposed substitution will have no adverse effect on other trades, the construction schedule, or specified warranty requirements.

4. Maintenance and service parts will be locally available for the proposed substitution.

5. The proposed substitution will have no effect on applicable codes.

6. The manufacturer's guarantees or warranties of proposed product is equivalent to, or exceeds, that of the specified product.

List name and location of three similar projects on which product was used, date of installation and Architect's name and phone number.

_____

_____

_____

Certification Of Equal Performance And Assumption Of Liability For Equal Performance:

Undersigned attests that the performance, function and quality of this proposed substitution are equal to or superior to the specified item and waives any rights to additional payment and time which may subsequently be necessitated by failure of the substitution to perform adequately, and for the required rework to make corrections thereof:

Submitted By:

_____

Name (type or print neatly)

_____

Signature (*has the authority to legally bind firm to the above terms*) Title

_____

Firm

_____

Address

_____

City, State Zip

_____

Telephone Date

Accept _____ Decline _____

Date _____ Date _____

SECTION 01 7000

EXECUTION REQUIREMENTS

PART 1 GENERAL

1.01 RELATED DOCUMENTS

A. Drawings and general provisions of the Contract, including General Conditions, Supplementary Conditions and Divisions 00 and 01 Specification Sections, apply to work of this section.

1.02 SECTION INCLUDES

A. General Procedural Requirements Governing Execution of the Work including, but not limited to, the following:

1. Construction Layout.
2. Field Engineering and Surveying.
3. General Installation of Products.
4. Progress Cleaning.
5. Starting and Adjusting.
6. Protection of Installed Construction.
7. Correction of the Work.

1.03 QUALITY ASSURANCE

A. Land Surveyor Qualifications: A professional land surveyor who is legally qualified to practice in jurisdiction where Project is located and who is experienced in providing land-surveying services of the type required for this project.

PART 2 PRODUCTS (NOT USED)

PART 3 EXECUTION

3.01 EXAMINATION

A. Existing Conditions / Utilities: The existence and location of site improvements, utilities, and other construction indicated as existing are not guaranteed. Before beginning work, investigate and verify the existence and location of existing utilities and other construction affecting the Work.

1. Refer to Section 02 1725 for utility location requirements.

2. Before construction, verify the location and invert elevation at points of connection of sanitary sewer, storm sewer, telecommunications, and water-service piping; and underground electrical services.

3. Furnish location data for work related to Project that must be performed by public utilities serving Project site.

B. Acceptance of Conditions: Start of work / installation indicates acceptance of existing conditions as not conflicting with the requirements of the Contract Documents or the design intent and being acceptable without any modification.

3.02 PREPARATION

A. Coordination: Furnish information to local utility and Owner that is necessary to adjust, move, or relocate existing utility structures, utility poles, lines, services, or other utility appurtenances located in or affected by construction. Coordinate with authorities having jurisdiction.

B. Field Measurements: Take field measurements as required to fit the Work properly. Recheck measurements before installing each product. Where portions of the Work are indicated to fit to other construction, verify dimensions of other construction by field measurements before fabrication. Coordinate fabrication schedule with construction progress to avoid delaying the Work.

C. Space Requirements: Verify space requirements and dimensions of items shown diagrammatically on Drawings.

D. Review of Contract Documents and Field Conditions: Immediately on discovery of the need for clarification of the Contract Documents, submit a Request for Information (RFI) to Architect. Include a detailed description of problem encountered, together with recommendations for changing the Contract Documents.

3.03 CONSTRUCTION LAYOUT

A. Verification: Before proceeding to lay out the Work, verify layout information shown on Drawings, in relation to the property survey and existing benchmarks. If discrepancies are discovered, notify Architect promptly.

B. General: Engage a land surveyor to lay out the Work using accepted surveying practices.

1. Establish benchmarks and control points to set lines and levels as needed to locate each element of Project.

2. Establish horizontal layout as shown on the Control Plans included in the Drawings. Do not scale Drawings to obtain required dimensions.

a. Architect / Engineer will provide a digital drawing file of the Control Plans to the surveyor upon request, subject to surveyor's agreement to Architect / Engineer's standard release agreement.

b. Surveyor is responsible for verifying the data shown on the digital Drawing file prior to start of any construction operation as follows:

1) Check the survey points shown from more than one control point.

2) Verify the accuracy of the layout shown against the existing site conditions.

3) Verify that the relationships shown on Drawings between utilities, buildings and site improvements matches the actual survey relationships.

c. Notify Architect of any discrepancies in the survey points shown on the digital Drawing file immediately and assist in resolving the discrepancy prior to installing the construction staking or start of any construction operation.

3. Inform installers of lines and levels to which they must comply.

4. Notify Architect when deviations from required lines and levels exceed the following tolerances:

a. Horizontal Layout: 1-inch in 400 feet.

b. Vertical Layout: 0-inches.

C. Site Improvements: Locate and lay out site improvements, including pavements, grading, fill and topsoil placement, utility slopes, and invert elevations.

D. Building Lines and Levels: Locate and lay out control lines and levels for structures, building foundations, column grids, and floor levels, including those required for mechanical and electrical work. Transfer survey markings and elevations for use with control lines and levels. Level foundations and piers from two or more locations.

E. Record Log: Maintain a log of layout control work. Record deviations from required lines and levels. Include beginning and ending dates and times of surveys, weather conditions, name and duty of each survey party member, and types of instruments and tapes used. Make the log available for reference by Architect / Engineer.

3.04 FIELD ENGINEERING

A. Reference Points: Locate existing permanent benchmarks, control points, and similar reference points before beginning the Work. Preserve and protect permanent benchmarks and control points during construction operations.

1. Do not change or relocate existing benchmarks or control points without prior written approval of Architect / Engineer. Report lost or destroyed permanent benchmarks or control points promptly. Report the need to relocate permanent benchmarks or control points to Architect / Engineer before proceeding.

2. Replace lost or destroyed permanent benchmarks and control points promptly. Base replacements on the original survey control points.

3.05 INSTALLATION

A. General: Locate the Work and components of the Work accurately, in correct alignment and elevation, as indicated.

1. Where space is limited, install components to maximize space available for maintenance and ease of removal for replacement.

B. Comply with manufacturer's written instructions and recommendations for installing products in applications indicated.

C. Install products at the time and under conditions that will ensure the best possible results. Maintain conditions required for product performance until Substantial Completion.

D. Conduct construction operations so no part of the Work is subjected to damaging operations or loading in excess of that expected during normal conditions of occupancy.

E. Tools and Equipment: Do not use tools or equipment that produce harmful noise levels.

F. Anchors and Fasteners: Provide anchors and fasteners as required to anchor each component securely in place, accurately located and aligned with other portions of the Work.

G. Hazardous Materials: Use products, cleaners, and installation materials that are not considered hazardous.

3.06 PROGRESS CLEANING

A. General: Clean Project site and work areas daily, including common areas. Coordinate progress cleaning for joint-use areas where more than one installer has worked. Enforce requirements strictly. Dispose of materials lawfully.

1. Use low-toxic and low-VOC cleaning supplies.

2. Comply with requirements in NFPA 241 for removal of combustible waste materials and debris.

3. Containerize hazardous and unsanitary waste materials separately from other waste. Mark containers appropriately and dispose of legally, according to regulations.

B. Site: Maintain Project site free of waste materials and debris.

C. Waste Disposal: Burying or burning waste materials on-site will not be permitted. Washing waste materials down sewers or into waterways will not be permitted.

D. During handling and installation, clean and protect construction in progress and adjoining materials already in place. Apply protective covering where required to ensure protection from damage or deterioration at Substantial Completion.

E. Clean and provide maintenance on completed construction as frequently as necessary through the remainder of the construction period. Adjust and lubricate operable components to ensure operability without damaging effects.

F. Limiting Exposures: Supervise construction operations to assure that no part of the construction, completed or in progress, is subject to harmful, dangerous, damaging, or otherwise deleterious exposure during the construction period.

3.07 STARTING AND ADJUSTING

A. Start equipment and operating components to confirm proper operation. Remove malfunctioning units, replace with new units, and retest.

B. Adjust operating components for proper operation without binding. Adjust equipment for proper operation.

C. Test each installed utility and piece of equipment to verify proper operation. Test and adjust controls and safeties. Replace damaged and malfunctioning controls and equipment.

D. Manufacturer's Field Service: Arrange for a factory-authorized service representative to inspect and repair any piece of equipment that does not function properly or cannot be made to operate as specified.

3.08 PROTECTION OF INSTALLED CONSTRUCTION

A. Provide final protection and maintain conditions that ensure installed Work is without damage or deterioration at time of Substantial Completion.

3.09 CORRECTION OF THE WORK

A. Repair or remove and replace defective construction.

1. Repairing includes replacing defective parts, refinishing damaged surfaces, touching up with matching materials, and properly adjusting operating equipment.

B. Remove and replace damaged surfaces that are exposed to view if surfaces cannot be repaired without visible evidence of repair.

C. Repair components that do not operate properly. Remove and replace operating components that cannot be repaired.

END OF SECTION

SECTION 01 7343

BUILDING DRY OUT AND ENVIRONMENTAL CONTROL

PART 1 GENERAL

1.01 RELATED DOCUMENTS

A. Drawings and general provisions of the Contract, including General Conditions, Supplementary Conditions and Divisions 00 and 01 Specification Sections, apply to work of this section.

1.02 SECTION INCLUDES

A. Building Dry Out During Construction.

B. Control of Building Environmental Conditions During Construction.

1.03 SCOPE OF WORK

A. Building dry out and environmental control shall be a proactive, well-planned, monitored and documented process to achieve the following:

1. To dry out building materials to levels required for constructing / installing the Work in accordance with manufacturer's requirements and industry standards.

2. To maintain environmental conditions (temperature, relative humidity, moisture content and air circulation) within the building as required for constructing / installing the Work in accordance with manufacturer's requirements and industry standards.

3. Prevent conditions within the building that allow the growth of fungi / mold during construction.

4. Avoid rejection or rework of any part of the Work due to improper building dry out or moisture control.

5. To provide the Owner with documentation of the environmental conditions within the building during construction.

B. Provide the means and methods required to dry out the building materials as early as possible in the construction schedule and starting immediately after the roof is able to shed water.

C. Control and maintain the following conditions inside the building spaces as required to provide for optimum drying conditions for building materials:

1. Temperature of air and building materials.

2. Relative humidity of the air.

3. Circulation and movement of the air.

4. Rate of exhaust air and outside air exchange.

5. Control the relative humidity level of the building interior air as required to:

   a. Continuously maintain a vapor pressure differential between the interior air and the building materials that promotes rapid evaporation and drying.

   b. Control the relative humidity level of the building interior air under 60% as required to prevent the growth of mold spores within the building.

D. Plan and manage the building dry out to prevent the following unacceptable conditions:

1. No bulk water leakage into the building interior, including exterior envelope assemblies after start of building dry out.

2. Installation of insulation or any finish materials before building is dried out and moisture content of building materials is at required levels.

3. Shrinkage cracks, gaps, swelling or buckling in finish materials due to insufficient acclimatization time in building prior to installation, or from installation before moisture content of framing or substrate is sufficiently dry.

4. Finish materials not secured tight to framing or substrate due to application before framing or substrate is dried out and moisture content is at required levels.

5. No moisture condensation on interior side of exterior wall and roof framing and sheathing.

6. No moisture or relative humidity conditions inside the building that allow the growth of fungi / mold spores.

7. Delays in the Work or repair / replacement of installed work resulting from non-conforming environmental conditions within the building or from non-conforming moisture content in building materials.

PART 2 PRODUCTS

2.01 EQUIPMENT

A. Monitoring and Testing: Provide the following minimum monitoring and testing equipment, for monitoring temperature, relative humidity and moisture content:

1. Monitoring Devices:

a. Thermometers: Analog or electronic digital thermometers for measuring air temperatures within each phase / area of the building during construction, readout in Fahrenheit degrees, accuracy within one degree.

b. Hygrometers: Analog or electronic digital hygrometers for measuring relative humidity level of air within each phase / area of the building during construction, readout in percentage, accuracy within 2 percent.

c. Wireless electronic data logging devices are recommended for providing temperature and relative humidity readings and uploading data transmission automatically to a computer with data logging software; the following companies offer a variety of wireless data logging devices and software options: www.onsetcomp.com and www.dataq.com.

2. Testing Devices:

a. Spot Thermometer: Infrared temperature gun with laser pointer for taking spot temperature readings, readout in Fahrenheit degrees, accuracy within two degrees.

b. Moisture Meters: Electronic moisture meter for determining the moisture content of various building materials, calibrate for each building material being tested.

B. Temporary Heating Equipment:

1. Provide, maintain and pay for temporary portable heating equipment and energy source as required to maintain environmental conditions within the building required for construction operations.

2. Provide heating equipment capable of maintaining minimum ambient temperature inside the building of 70 degrees F, or higher when required to dry out building materials in accordance with the project schedule.

a. Heating equipment is limited to electric heaters or indirect-fired gas, oil or kerosene fired units with exhaust piped to building exterior. Direct fired gas / oil heaters are not allowed, all combustion / exhaust gases shall be vented to building exterior.

b. Provide flexible ducting for distributing heated air to all parts of the building.

3. Use of the permanent heating system in the building for temporary heat is subject to the Owner's prior approval based on compliance with the following:

a. Interior dust producing work shall be complete and building interior shall be clean and dirt / dust-free.

b. Approved filtration system is installed on return air.

c. Heating system warranty shall begin as noted in the General Conditions in Section 00 7200, (not on the date permanent heating equipment is started for providing temporary heat).

d. Contractor shall clean any permanent heating equipment and ductwork that becomes contaminated with construction dirt / dust. Cleaning shall be performed by a company that is acceptable to the Owner specializing in duct and heating equipment cleaning.

C. Temporary Ventilation Equipment:

1. Provide and pay for temporary portable ventilation equipment to provide air circulation and movement as required to promote increased evaporative drying of building materials, for maintaining uniform temperature and relative humidity levels throughout all areas the building and to evacuate and prevent concentration of dust, fumes, vapors, or gases.

D. Temporary Dehumidification Equipment:

1. Provide and pay for temporary portable dehumidification equipment as required to lower the relative humidity level inside the building as required to promote increased evaporative drying of building materials, to maintain relative humidity level of building interior air under 60% and to reduce time to dry out materials when required to prevent delays in construction schedule.

2.02 TEMPORARY ENCLOSURES

A. Provide materials as required to provide watertight temporary enclosure, including, but not limited to: plywood / OSB sheathing, wood framing, heavy plastic sheeting and tarps, sealant, sheet metal flashing, etc.

B. Airtight temporary enclosures and temporary interior barriers are required when dehumidification equipment is utilized to reduce time to dry out of materials and thereby prevent delays in the construction schedule.

PART 3 EXECUTION

3.01 COORDINATION

A. Review, coordinate and accommodate work of other trades that interface with, affect or are affected by the work of this section so as to facilitate the execution of the overall Work of this project in a coordinated and efficient manner.

B. Coordinate the building dry out schedule with the work of other sections to provide the building interior environmental requirements (temperature, relative humidity and ventilation) as required for accomplishing the Work as specified in each specification section and as required by each material / product / system manufacturer's requirements.

3.02 MONITORING AND TESTING

A. Monitoring:

1. Installation: Install thermometers and hygrometers in each phase / area in the building to allow daily monitoring of the air temperature and relative humidity levels.

   a. Provide adequate number of devices in each phase / area in the building to provide good coverage of the spaces, minimum two (2) devices in each separate phase / area of the building.

   b. Locate devices in protected interior areas not subject to exterior drafts and temperature shifts due to work in progress and exterior doorways or openings.

2. Data Logging: Starting at initial building dry out, log the air temperature and relative humidity readings three time each day, record data on a chart if done manually, or within the data logging software if wireless electronic data loggers are utilized.

3. Record readings first thing in the morning, at noon and at the end of the day just before leaving the site.

   a. If wireless electronic data logging devices are utilized, set for data reading every hour.

4. Daily data logging shall continue from initial building dry out through Substantial Completion.

5. Owner and Architect Copies: A copy of the chart or computer data logging printout showing the humidity and temperature levels in the building for the previous week shall be provided at each job meeting to Architect and Owner.

B. Testing:

1. Building Materials Spot Temperatures: Test the temperature of materials using the infrared temperature gun to determine optimum air temperature and relative humidity levels required for achieving a vapor pressure differential that will provide the drying conditions required to maintain the project schedule.

2. Building Materials Moisture Content: Test the moisture content of building materials using moisture meter to confirm when moisture content conforms to specified levels and manufacturer's requirements.

   a. Comply with meter manufacturer's instructions for use.

   b. Calibrate meter for each different material tested in accordance with manufacturer's instructions.

3. Test Reports: Provide Architect and Owner with a copy of the moisture meter readings on building materials taken prior to installing interior insulation and before installation of GWB for each phase / area of the building as work progresses. Report shall list the location of each moisture meter reading within the building, the materials tested and the moisture content expressed in percent of moisture (the readout on the moisture meter's scale shall be converted into percent using manufacturer's instructions for the meter).

3.03 INITIAL BUILDING DRY OUT

A. Immediately after the roof is able to shed water on any phase or area of the building, achieve initial dry out of the building materials and interior as follows:

1. Achieve surface dry conditions within 24 to 48 hours.

2. Remove any standing water from floors and depressed areas using wet vacuum equipment.

3. Provide air movement and circulation throughout as required to maintain the relative humidity level of air inside building at or below ambient relative humidity of exterior air.

4. Provide fans and air movement across the entire floor to dry the floor surface.

5. Dry wood framing to moisture content under 19% within 7 days.

6. Dry wood plates in contact with concrete to moisture content of 19% or less within 14 days.

7. Provide temporary heat if exterior temperature and relative humidity conditions are not conducive to drying within these time frames.

8. Maintain building in dry condition, provide temporary enclosures at exterior openings to prevent the entrance of water.

3.04 TEMPORARY ENCLOSURES

A. Provide air and watertight temporary enclosure(s) at exterior openings and envelope as required to protect the building from exposure to the weather or from becoming wet after initial building dry out until permanent doors, windows, louvers, equipment, roofing, flashings and exterior cladding are installed.

B. Provide temporary enclosures whenever permanent products / assemblies are not available in time to meet the requirements of the project schedule or for maintaining environmental control required for installation of the Work.

3.05 ENVIRONMENTAL CONDITIONS DURING CONSTRUCTION

A. Provide temporary heat, ventilation and dehumidification as required to provide the following:

1. Interior air temperature and relative humidity levels required for completing the Work of this project in conformance with the environmental requirements contained in the specification sections and as required by the materials / products / systems manufacturers.

2. Building materials dried to the specified moisture content and as recommended by materials / products / systems manufacturers.

3. Conformance to the Scope of Work requirements specified in Part 1 of this section.

3.06 FIELD QUALITY CONTROL

A. Contractor Quality Control: Employ / assign quality control personnel to monitor the work of this section for conformance to the requirements of the Contract Documents and to good construction practices.

1. Contractor is solely responsible for managing and controlling the quality of the work and conformance with the requirements of the Contract Documents.

END OF SECTION

SECTION 01 7700

CLOSEOUT PROCEDURES

PART 1 GENERAL

1.01 RELATED DOCUMENTS

A. Drawings and general provisions of the Contract, including General Conditions, Supplementary Conditions and Divisions 00 and 01 Specification Sections, apply to work of this section.

1.02 SECTION INCLUDES

A. Administrative and Procedural Requirements for the Contract Closeout including:

1. Closeout Documents / Procedures.

   a. Group 1, 2 3, 4 and 5 Closeout Documents / Procedures.

2. Adjusting.

3. Extra Stock.

4. Spare Parts and Maintenance Materials.

5. AHJ Approved Permit Drawing Set.

6. Final Cleaning.

7. Demonstration and Training.

8. Final Payment Application.

1.03 CLOSEOUT DOCUMENTS / PROCEDURES

A. Comply with the General Conditions of the Contract.

B. Pre-Submittal Meeting: Schedule and conduct a meeting to discuss the closeout requirements for the Project at least thirty (30) days before the date of Substantial Completion. Schedule the meeting to be before or after the weekly progress meetings.

C. Refer to the “Contractor Project Closeout Checklist” at the end of this section for a complete list of closeout requirements and documents required for this Project.

1. Contractor shall be responsible for maintaining and updating the Project Closeout Checklist. Architect will provide the Contractor an electronic copy of the checklist for their use.

D. Closeout submittals shall be submitted in the following groups of documents. Provide an updated “Contractor Project Closeout Checklist” with each submittal of closeout documents. Partial submittals of groups will not be accepted or reviewed.

1. Group 1: Submit PDF copies of each of the items on the attached Contractor Project Closeout Checklist for review as required for the Project. These documents shall be completed / submitted for Substantial Completion.

2. Group 2 – As-Builts: Submit as specified in Section 01 7839 and as shown on the attached Contractor Project Closeout Checklist. Submit draft versions for review before submitting final documents.

3. Group 3 – Operations and Maintenance Data and Warranties and TAB Reports: Submit as specified in Section 01 7823 and as shown on the attached Contractor Project Closeout Checklist. TAB Reports shall be submitted as PDF copies. Submit draft / preliminary versions for review before submitting final documents.

4. Group 4 – Punch List Review and Substantial Completion: Submit a PDF copy as specified in Section 01 7813 and as shown on the attached Contractor Project Closeout Checklist.

5. Group 5: Submit PDF copies of each of the items on the attached Contractor Project Closeout Checklist for review as required for the Project. These documents shall be completed / submitted for Final Completion.

1.04 ADJUSTING

A. Adjust operating products and equipment in accordance with manufacturer's recommendations and specification section to ensure smooth and unhindered operation.

1.05 EXTRA STOCK (GROUP 3)

A. Provide extra stock in quantities specified in individual specification sections.

B. Make arrangements with the Owner’s representative to deliver extra stock items, prior to final payment.

C. Document receipt of extra stock by Owner's representative by listing each extra stock item and obtaining the signature of the Owner's representative for it. Include this document in Part 1 of the O and M Manual as specified in Section 01 7823.

1.06 SPARE PARTS AND MAINTENANCE MATERIALS (GROUP 3)

A. Provide products, spare parts, maintenance and extra materials in quantities specified in individual specification sections.

B. Make arrangements with the Owner’s representative to deliver products, spare parts, maintenance and extra materials, prior to final payment.

C. Document receipt of products, spare parts, maintenance and extra materials by Owner's representative by listing each product, spare part, maintenance and extra material item and obtaining the signature of the Owner's representative for it. Include this document in Part 1 of the O and M Manual as specified in Section 01 7823.

1.07 AHJ APPROVED PERMIT DRAWING SET (GROUP 3)

A. During construction, maintain Permit Set of drawings in good, clean condition and protect from damage or marks.

B. After obtaining the Certificate of Occupancy, make arrangements with the Owner’s representative to deliver AHJ approved Permit Set of drawings to the Owner for their permanent record, prior to final payment.

C. Document receipt of Permit Set of drawings by Owner's representative by obtaining the signature of the Owner's representative for it. Include this document in Part 1 of the O and M Manual as specified in Section 01 7823.

1.08 FINAL CLEANING (GROUP 4)

A. Execute final cleaning prior to Substantial Completion review and during the period between Substantial and Final Completion where punch list work causes waste, rubbish or debris.

B. Clean surfaces exposed to view, remove temporary labels, stains and foreign substances. Follow manufacturer's recommendations for cleaning installed products.

1. Use low-toxic / low-VOC cleaning supplies.

C. Clean equipment and fixtures to sanitary condition.

D. Clean dirt and debris from drainage systems.

E. Clean site, sweep paved areas, and rake clean landscaped surfaces.

F. Remove waste and surplus materials, rubbish, and construction facilities from the site.

1.09 DEMONSTRATION AND TRAINING (GROUP 5)

A. Provide Owner demonstration and training as specified in Section 01 7900 and as required in individual specification Sections.

1.10 FINAL PAYMENT APPLICATION (GROUP 5)

A. Prior to processing of Final Application and Certificate for Payment, all Closeout Documents listed on the “Contractor Project Closeout Checklist” attached at the end of this section must be submitted, reviewed and accepted by the Architect.

PART 2 PRODUCTS (NOT USED)

PART 3 EXECUTION (NOT USED)

END OF SECTION

CONTRACTOR PROJECT CLOSEOUT CHECKLIST

PROJECT: Port of Everett - Wine Walk Building A12

CONTRACTOR:

BCRA JOB No: 23045.00.00

STATUS AS OF XX/XX/20XX

CONTRACT REQUIREMENTS	REFERENCE	
GROUP 1 CLOSEOUT DOCUMENTS		**GROUP 1 SUBMITTAL DATE**
Temporary Occupancy Permit (If Necessary)	GC 9.8.1.1.1	(ENTER SUBMITTAL DATE HERE) *(PARTIAL SUBMITTALS WILL NOT BE ACCEPTED)*
Occupancy Permit from Building Dept	GC 9.10.1.5.3	
Health Department Approval (If Necessary)	GC 9.8.1.1	
Pressure Vessel Inspections / Approval (If Necessary)	GC 9.8.1.1.1	
Copies of signed off permits by AHJ	GC 9.8.1.1.3 GC 9.10.2.1(9)	
Certified statement from Contractor that all permits have been closed and requirements of AHJ have been met	GC 9.8.1.1.3 GC 9.10.2.1(9)	
Public Works Department Deficiency List Completed (If Necessary)	GC 9.10.1.5.2	
TESC Removed and NPDES Permit Closed (If Necessary)	SPEC 31 2500	
Confirm Contractor Insurance Coverage After Substantial Completion / Coordinate w/ Owner	GC 9.8.1.1.6 GC 9.10.1.5.12	

CONTRACT REQUIREMENTS	REFERENCE		
GROUP 2 CLOSEOUT DOCUMENTS		**GROUP 2 SUBMITTAL DATE(S)**	
DRAFT AS-BUILT DRAWINGS SUBMITTAL			
Division 3 - 14 Architectural DRAFT	GC 9.10.1.5.5 GC 9.10.2.1(10)	(ENTER SUBMITTAL DATE HERE) *(PARTIAL SUBMITTALS WILL NOT BE ACCEPTED)*	(ENTER RETURN DATE OF SUBMITTAL FROM ARCHITECT)
Division 21 Fire Sprinkler DRAFT	GC 9.10.1.5.5 GC 9.10.2.1(10)		
Division 22 Plumbing DRAFT	GC 9.10.1.5.5 GC 9.10.2.1(10)		
Division 23 HVAC DRAFT	GC 9.10.1.5.5 GC 9.10.2.1(10)		
Division 23 Controls DRAFT	GC 9.10.1.5.5 GC 9.10.2.1(10)		
Division 26 Electrical DRAFT	GC 9.10.1.5.5 GC 9.10.2.1(10)		
Division 27 Communications DRAFT (Data / Voice, Classroom AV) DRAFT	GC 9.10.1.5.5 GC 9.10.2.1(10)		
Division 28 Safety / Security DRAFT (Intrusion, Access, CCTV, Fire Alarm) DRAFT	GC 9.10.1.5.5 GC 9.10.2.1(10)		
Division 32 Landscape / Irrigation DRAFT	GC 9.10.1.5.5 GC 9.10.2.1(10)		
Division 31, 32, 33 Civil DRAFT	GC 9.10.1.5.5 GC 9.10.2.1(10)		
FINAL AS-BUILT DRAWINGS SUBMITTAL			
Division 3 - 14 Architectural FINAL	GC 9.10.1.5.5 GC 9.10.2.1(10)	(ENTER SUBMITTAL DATE HERE) *(PARTIAL SUBMITTALS WILL NOT BE ACCEPTED)*	
Division 21 Fire Sprinkler FINAL	GC 9.10.1.5.5 GC 9.10.2.1(10)		
Division 22 Plumbing FINAL	GC 9.10.1.5.5 GC 9.10.2.1(10)		
Division 23 HVAC FINAL	GC 9.10.1.5.5 GC 9.10.2.1(10)		
Division 23 Controls FINAL	GC 9.10.1.5.5 GC 9.10.2.1(10)		
Division 26 Electrical FINAL	GC 9.10.1.5.5 GC 9.10.2.1(10)		
Division 27 Communications DRAFT (Data / Voice, Classroom AV) FINAL	GC 9.10.1.5.5 GC 9.10.2.1(10)		
Division 28 Safety / Security DRAFT (Intrusion, Access, CCTV, Fire Alarm) FINAL	GC 9.10.1.5.5 GC 9.10.2.1(10)		
Division 32 Landscape / Irrigation FINAL	GC 9.10.1.5.5 GC 9.10.2.1(10)		
Division 31, 32, 33 Civil FINAL	GC 9.10.1.5.5 GC 9.10.2.1(10)		
As-Built Utility Survey (If Necessary)	SPEC 01 7839		
Final As-Built Drawings for Site Work Submitted to Public Works / U ry)	GC 9.10.2.1(11)		

bcra

CONTRACTOR PROJECT CLOSEOUT CHECKLIST

PROJECT: Port of Everett - Wine Walk Building A12

CONTRACTOR:

BCRA JOB No: 23045.00.00

STATUS AS OF XX/XX/20XX

CONTRACT REQUIREMENTS	REFERENCE		
GROUP 3 CLOSEOUT DOCUMENTS / PROCEDURES		**GROUP 3 SUBMITTAL / COMPLETION DATE(S)**	
Owner Receipt for Tools, Spare Parts / Extra Stock	GC 9.10.1.5.6	(ENTER DATE ITEMS TURNED OVER TO OWNER)	
AHJ Approved Permit Drawings Set Delivered to Owner	SPEC 01 7700	(ENTER DATE DRAWINGS TURNED OVER TO OWNER)	
DRAFT O&M / WARRANTY MANUALS, DRAFT WSSP & PRELIMINARY TAB REPORT SUBMITTAL			
Division 3 - 14 Architectural DRAFT	GC 9.10.1.5.5 GC 9.10.1.5.9 GC 9.10.2.1(11)	(ENTER SUBMITTAL DATE HERE) *(PARTIAL SUBMITTALS WILL NOT BE ACCEPTED)*	(ENTER RETURN DATE OF SUBMITTAL FROM ARCHITECT)
Division 21 Fire Sprinkler DRAFT	GC 9.10.1.5.5 GC 9.10.1.5.9 GC 9.10.2.1(11)		
Division 22 / 23 Plumbing & HVAC DRAFT	GC 9.10.1.5.5 GC 9.10.1.5.9 GC 9.10.2.1(11)		
Division 26 Electrical DRAFT	GC 9.10.1.5.5 GC 9.10.1.5.9 GC 9.10.2.1(11)		
Division 27 Communications DRAFT	GC 9.10.1.5.5 GC 9.10.1.5.9 GC 9.10.2.1(11)		
Division 28 Fire Alarm DRAFT	GC 9.10.1.5.5 GC 9.10.1.5.9 GC 9.10.2.1(11)		
Division 28 Electronic Safety & Security DRAFT	GC 9.10.1.5.5 GC 9.10.1.5.9 GC 9.10.2.1(11)		
Division 32 Exterior Improvements DRAFT	GC 9.10.1.5.5 GC 9.10.1.5.9 GC 9.10.2.1(11)		
Division 33 Site Utilities DRAFT	GC 9.10.1.5.5 GC 9.10.1.5.9 GC 9.10.2.1(11)		
WSSP Summary DRAFT (If Necessary)	SPEC 01 8113		
Preliminary Test and Balance Report	SPEC 23 0593		
FINAL O&M / WARRANTY MANUALS, FINAL WSSP & FINAL TAB REPORT SUBMITTAL			
Division 3 - 14 Architectural FINAL	GC 9.10.1.5.5 GC 9.10.1.5.9 GC 9.10.2.1(11)	(ENTER SUBMITTAL DATE HERE) (PARTIAL SUBMITTALS WILL NOT BE ACCEPTED)	
Division 21 Fire Sprinkler FINAL	GC 9.10.1.5.5 GC 9.10.1.5.9 GC 9.10.2.1(11)		
Division 22 / 23 Plumbing & HVAC FINAL	GC 9.10.1.5.5 GC 9.10.1.5.9 GC 9.10.2.1(11)		
Division 26 Electrical FINAL	GC 9.10.1.5.5 GC 9.10.1.5.9 GC 9.10.2.1(11)		
Division 27 Communications FINAL	GC 9.10.1.5.5 GC 9.10.1.5.9 GC 9.10.2.1(11)		
Division 28 Fire Alarm FINAL	GC 9.10.1.5.5 GC 9.10.1.5.9 GC 9.10.2.1(11)		
Division 28 Electronic Safety & Security FINAL	GC 9.10.1.5.5 GC 9.10.1.5.9 GC 9.10.2.1(11)		
Division 32 Exterior Improvements FINAL	GC 9.10.1.5.5 GC 9.10.1.5.9 GC 9.10.2.1(11)		
Division 33 Site Utilities FINAL	GC 9.10.1.5.5 GC 9.10.1.5.9 GC 9.10.2.1(11)		
WSSP Summary Binders FINAL (If Necessary)	SPEC 01 8113		
Final Test and Balance Report	SPEC 23 0593		

bcra

CONTRACTOR PROJECT CLOSEOUT CHECKLIST

PROJECT: Port of Everett - Wine Walk Building A12

CONTRACTOR:

BCRA JOB No: 23045.00.00

STATUS AS OF XX/XX/20XX

CONTRACT REQUIREMENTS	REFERENCE			
GROUP 4 CLOSEOUT DOCUMENTS / PROCEDURES		**GROUP 4 SUBMITTAL / COMPLETION DATE(S)**		
Discontinue / Remove Temporary Utilities	GC 9.8.1.1.5 GC 9.10.1.5.11	(ENTER DATE OF REMOVAL)		
Final Cleaning Completed	GC 9.8.1.1.7 GC 9.10.1.5.7	(ENTER DATE CLEANING WAS COMPLETED)		
Contractor's Written Notice of Substantial Completion / Request For A/E Punch List	GC 9.8.1.1.2	(ENTER DATE OF NOTICE)		
PUNCH LISTS		PUNCH REVIEW DATE	PUNCH LIST BACKCHECK REVIEW DATE	SIGNED-OFF PUNCH LIST SENT TO ARCHITECT, ENG(S), & OWNER
Architectural Punch List	GC 9.8.1.1.2	(ENTER DATE)	(ENTER DATE)	(ENTER DATE)
Door Hardware Punch List	GC 9.8.1.1.2			
Kitchen Punch List	GC 9.8.1.1.2			
Fire Sprinkler System Punch List	GC 9.8.1.1.2			
Mechanical Punch List	GC 9.8.1.1.2			
Electrical Punch List	GC 9.8.1.1.2			
Landscape / Irrigation Punch List	GC 9.8.1.1.2			
Civil Punch List	GC 9.8.1.1.2			
Completion of the Commissioning Agent's Outstanding Items	GC 9.8.2.1	(ENTER DATE ITEMS ARE 100% COMPLETE)		
Certificate of Substantial Completion Issued / Punch Lists Attached (AIA G704)	GC 9.8.4	(ENTER DATE OF SUBSTANTIAL COMPLETION AS INDICATED BY ARCHITECT)		

CONTRACT REQUIREMENTS	REFERENCE	
GROUP 5 CLOSEOUT DOCUMENTS / PROCEDURES		**GROUP 5 SUBMITTAL / COMPLETION DATE(S)**
Owner Instruction / Training Completed - Provide Training Reports	GC 9.10.1.5.8 SPEC 01 7900	(ENTER SUBMITTAL DATE HERE) *(PARTIAL SUBMITTALS WILL NOT BE ACCEPTED)*
Contractor's Affidavit of Payment of Debts & Claims (AIA G706)	GC 9.10.2.1(1)	
Certificate of Insurance required after Final Completion	GC 9.10.2.1(2)	
Letter from Contractor Stating they know of no reason insurance will not be renewed.	GC 9.10.2.1(3)	
Consent of Surety Company to Final Payment (AIA G707)	GC 9.10.2.1(4)	
Contractor's Affidavit of Release of Liens (AIA G706A)	GC 9.10.2.1(5)	
Affidavit of Wages Paid Forms for Contractor and each Subcontractor	GC 9.10.2.1(6)	
Certification that materials installed are "lead free" and "asbestos free"	GC 9.10.2.1(8)	
Final Change Order	GC 9.10.1.5.4	(ENTER DATE OF FINAL CHANGE ORDER)
Final Certificate for Payment and Certificate for Payment for Retainage	GC 9.10.1.5.4	(ENTER DATE OF FINAL PAY APP AND, IF NECESSARY, CERTIFICATE OF PAYMENT OF RETAINAGE)

bcra

SECTION 01 7813

PUNCH LIST AND BACKCHECK (GROUP 4)

PART 1 GENERAL

1.01 RELATED DOCUMENTS

A. Drawings and general provisions of the Contract, including General Conditions, Supplementary Conditions and Divisions 00 and 01 Specification Sections, apply to work of this section.

B. Refer to Section 01 7700 for General Closeout Procedures.

1.02 SECTION INCLUDES

A. Administrative and Procedural Requirements for the Punch List Review in Group 4 Closeout Documents.

1.03 SUBMITTAL

A. Refer to Section 01 3300 for submittal procedures.

B. Submit Punch List Documents as part of the Group 4 Closeout Documents as shown on the Contractor Project Closeout List in Section 01 7700.

1.04 PUNCH LIST REVIEW REQUIREMENTS

A. Comply with the General Conditions of the Contract and the requirements of this Section.

B. Architect and Engineers will only provide two (2) visits to the project site for performing a punch list review and backcheck of the work.

1. Schedule Punch List Review and Backcheck Reviews with Architect, Engineers and Owner at least ten (10) days in advance.

2. First visit will be in response to the Contractor's written notice that the work has achieved Substantial Completion as defined in the General Conditions.

3. Second visit will be after written notification by the Contractor that punch list items and deficiencies noted during punch list review have been 100 percent corrected.

C. Punch List Review: Contractor shall schedule a room by room punch list review with the Architect, Engineers and Owner.

1. Contractor shall provide a written / printed record the deficiencies observed during the punch list review.

2. Contractor will use the punch list form attached to this section to record the deficiencies, unless another form is agreed upon during the Closeout Pre-Submittal Meeting. Architect will provide an electronic version of the form in Microsoft Excel for their use.

3. Contractor shall submit a draft version of the punch list in PDF format to the Architect, Engineers and Owner before distribution to their subcontractors.

4. Contractor shall make any corrections noted by the Architect, Engineers, or Owner.

5. After corrections are made, the Contractor shall submit a copy of the punch list in PDF format to the Architect for their records.

6. Contractor shall be responsible for distribution of the punch list as required to complete the Work.

7. Notify the Architect in writing of any disputed items on the punch list prior to requesting backcheck review.

D. Punch List Backcheck Review: Contractor shall schedule a backcheck review of the punch list items with the Architect, Engineers and Owner.

1. Project Superintendent and / or Project Foreman for each discipline shall be present for the punch list backcheck reviews by the Architect, Engineers and Owner.

2. Contractor shall coordinate each discipline's (Architect, Civil, Landscape Architect, Fire Sprinkler, Mechanical, Electrical, and Door Hardware) punch list backcheck with Architect and each Engineering Consultant directly. Architect will not coordinate the backcheck with the Engineering Consultants.

3. Contractor shall provide a printed copy of the punch list review for Architect, Engineers and Owner to check off completed items during the backcheck review.

4. Contractor shall provide a PDF copy of each signed-off punch list to the Architect.

E. Should additional reviews by the Architect and / or Engineers be required due to the Contractor's failure to correct deficient work, the Owner will deduct the amount of Architect and / or Engineers compensation for re-review services from final payment to Contractor.

1. Backcheck Re-Review Fees shall include travel time, mileage and the reviewing individual's hourly billing rate.

PART 2 PRODUCTS (NOT USED)

PART 3 EXECUTION (NOT USED)

END OF SECTION

Punch List

PORT OF EVERETT - WINE WALK BUILDING A12

CONTRACTOR NAME
Contractor Address 1
Contractor Address 2
Attn: Contractor PM
Contractor Superintendent

OWNER NAME
Owner Name
Owner Address 1
Owner Address 2

BCRA
2106 Pacific Avenue, Suite 300
Tacoma, WA 98409
Punchlist Completed by: NAME
Punchlist Date: DATE
BCRA Project Number: 23045.00.00

Room # & Room Name

BCRA Back-Check	Item	Location & Description	Subcontractor	Sub's Initials	Date Compl.	GC Initials
	1					
	2					
	3					
	4					
	5					
	6					
	7					
	8					
	9					
	10					
	11					
	12					

Backchecked on XX/XX/XX by NAME
X = Completed
ND = Not Done
NC = Not Completed
NA = Not Acceptable
? = Contractor To Confirm

SECTION 01 7823

OPERATIONS AND MAINTENANCE DATA (GROUP 3)

PART 1 GENERAL

1.01 RELATED DOCUMENTS

A. Drawings and general provisions of the Contract, including General Conditions, Supplementary Conditions and Divisions 00 and 01 Specification Sections, apply to work of this section.

B. Refer to Section 01 7700 for General Closeout Procedures.

1.02 SECTION INCLUDES

A. Administrative and Procedural Requirements for the Operation and Maintenance Data and Warranties in Group 3 Closeout Documents.

1.03 SUBMITTAL

A. Refer to Section 01 3300 for submittal procedures.

B. Submit Operation and Maintenance Data and Warranties as a part of the Group 3 Closeout Documents as shown on the Contractor Project Closeout List in Section 01 7700.

1.04 OPERATION AND MAINTENANCE DATA AND WARRANTIES

A. Comply with the General Conditions of the Contract and the requirements of this Section.

1. Operation and Maintenance Data and Warranties shall be divided into the following volumes:

a. Volume 1: Divisions 03 – 14 Architectural.

b. Volume 2: Division 21 Fire Sprinkler.

c. Volume 3: Divisions 22 and 23 Mechanical (Includes Plumbing and HVAC).

d. Volume 4: Division 26 Electrical.

e. Volume 5: Division 27 Communications.

f. Volume 6: Division 28 Fire Alarm.

g. Volume 7: Division 28 Electronic Safety and Security.

h. Volume 8: Division 32 Exterior Improvements.

i. Volume 9: Division 33 Site Utilities.

B. Operation and Maintenance and Warranty Volumes Content:

1. Prepare a Table of Contents for each volume, with each Product or system description identified.

2. Part 1: General Project Information. Provide the General Project Information only in Volume 1.

a. Directory, listing names, addresses, and telephone numbers of Architect, Engineer(s), Contractor, and Subcontractors.

b. General Contractor one-year warranty.

c. Name and signature of Owner's representatives instructed in operation of equipment.

d. Extra stock listing with signature of Owner's representative acknowledging receipt.

e. Products, Spare Parts, and Maintenance and Extra Material listings with signature of Owner's representative acknowledging receipt.

f. Owner's representative receipt acknowledging their receipt of the AHJ approved Permit Set of drawings.

3. Part 2: For each specification section from Division 03 through Division 48, provide the following:

a. Section Cover Sheet shall include the following information:

1) Specification Section Number and Name.

2) Provide Names, Addresses and Telephone numbers of Subcontractors and / or Suppliers.

b. Project warranty documents from Subcontractors, suppliers and manufacturers.

1) Provide warranties as specified in each individual specification section.

2) Warranties shall be executed and not sample warranties.

3) Warranties shall be dated for Substantial Completion, not when the work was completed.

4) For items of Work delayed beyond date of Project Completion, provide updated submittal replacement sheets within ten days after acceptance, listing date of acceptance as start of warranty period for those items.

c. Provide project documents, including the following:

1) Reviewed Shop Drawings.

2) Reviewed Product Data Sheets.

3) Parts list for each component.

4) Operating instructions.

5) Maintenance instructions for equipment and systems.

6) Cleaning instructions for special finishes, including recommended cleaning methods and materials and special precautions identifying detrimental agents.

C. Draft Submittal:

1. Digital Copy: Submit a digital Draft copy in PDF format for review by Architect / Engineer and Owner. Organize the submittal as follows:

a. Provide a separate PDF file for each volume and label the file "*Project #_O&M_Vol #_Discipline*".

b. Subdivide the contents with a divider page that includes the label of the section / content, logically organized as described above.

1) On the divider page, provide the names, addresses and telephone numbers of Subcontractors and suppliers for that section.

c. Bookmark each PDF file for easy navigation.

2. The digital copy will be returned to Contractor with Architect / Engineer and Owner comments.

3. Revise content of documents as required by Architect / Engineer and Owner comments.

D. Final Submittal:

1. Digital Copy: Submit a digital copy of the revised documents in PDF format.

PART 2 PRODUCTS (NOT USED)

PART 3 EXECUTION (NOT USED)

END OF SECTION

SECTION 01 7839

PROJECT AS-BUILT DOCUMENTS (GROUP 2)

PART 1 GENERAL

1.01 RELATED DOCUMENTS

A. Drawings and general provisions of the Contract, including General Conditions, Supplementary Conditions and Divisions 00 and 01 Specification Sections, apply to work of this section.

B. Refer to Section 01 7700 for General Closeout Procedures.

1.02 SECTION INCLUDES

A. Administrative and Procedural Requirements for the As-Built Documents in Group 2 Closeout Documents.

1.03 SUBMITTAL

A. Refer to Section 01 3300 for submittal procedures.

B. Submit As-Built Documents as Group 2 Closeout Documents as shown on the Contractor Project Closeout List in Section 01 7700.

1.04 AS-BUILT DOCUMENTS

A. Comply with the General Conditions of the Contract and the requirements of this Section.

B. As-Built Documents shall consist of the following:

1. Contract Documents:

   a. Contract Drawings with As-Built Revisions noted.

2. Drawings of Contractor designed systems, (i.e. joists, trusses, fire sprinkler system, fire alarm system, controls system, etc.).

C. During Construction:

1. Maintain on-site throughout the construction period, one set of As-Built Documents and record actual revisions to the work on these documents. As-Built Documents and records specified below may be kept in electronic format with on-site access and with off-site weekly backup.

   a. Store As-Built Documents separate from documents used for construction.

b. Record information concurrent with construction progress.

c. Contract Drawings: Legibly mark in red or blue color, cloud and flag each item to record actual construction including:

1) Surveyed as-built conditions.

2) Measured horizontal and vertical locations of underground utilities referenced to permanent surface improvements.

3) Measured location of internal utilities concealed in construction, referenced to visible and accessible features of the work.

4) Field changes of dimensions and detail.

5) Details not on original Contract Drawings.

D. Prior to Contract Closeout: Prepare and submit As-Built Documents to the Architect as follows:

1. As-Built Document Content:

a. As-Built Utility Survey: Provide survey of site utility piping and structures with location and elevation, performed by a professional surveyor. Survey information shall be recorded on the Contract Drawings for inclusion in the As-Built Drawings.

b. As-Built Project Drawings: Drawings shall be either PDF format digital files with as-built changes marked in red, or a paper Drawing set in good, clean condition and legibly marked in red ink to show revisions and changes made during construction and as-built conditions. Mark or stamp bottom of each sheet “As-Built Drawings, Name of Construction Company, Date”. Each drawing sheet of the contract documents shall be submitted and marked or stamped even if there are no as-built changes to the sheet.

c. Contractor Designed Systems: Electronically update the contractor designed system drawings with as-built conditions. Mark or stamp bottom of each sheet “As-Built Drawings, Name of Construction Company, Date”.

2. Draft Submittal:

a. Digital Copy: Submit a colored digital draft copy with the content described below in PDF format for review by Architect / Engineer and Owner. Organize the submittal as follows:

1) As-Built Survey: Provide one PDF file and label the file “*Project #_As-Built Utility Survey*”.

2) As-Built Project Drawings: Provide a separate PDF file for each discipline and label the file "*Project #_As-Built_Discipline*". Each file shall have each page bookmarked and labeled to match the sheet number and sheet title.

3) Contractor Designed Systems: Provide one PDF file for each set of system Drawings and label each file per its content.

b. The digital copy will be returned to Contractor with Architect / Engineer and Owner comments.

c. Revise content of documents as required by Architect / Engineer and Owner comments prior to submitting final documents.

3. Final Submittal:

a. Digital Copy: Submit a digital copy of the revised documents in PDF format.

PART 2 PRODUCTS (NOT USED)

PART 3 EXECUTION (NOT USED)

END OF SECTION

SECTION 01 7900

DEMONSTRATION AND TRAINING

PART 1 GENERAL

1.01 RELATED DOCUMENTS

A. Drawings and general provisions of the Contract, including General Conditions, Supplementary Conditions and Divisions 00 and 01 Specification Sections, apply to work of this section.

1.02 SECTION INCLUDES

A. Administrative and Procedural Requirements for required Demonstration and Training including:

1. Demonstration of operation of systems, subsystems, and equipment.
2. Training in operation and maintenance of systems, subsystems, and equipment.
3. Demonstration and training video recordings.

1.03 SCOPE OF WORK

A. Provide training of Owner personnel in the operation and maintenance for:

1. Software-Operated Systems.
2. HVAC Systems and Equipment.
3. Plumbing Equipment.
4. Electrical Systems and Equipment.
5. Conveying Systems.
6. Landscape Irrigation System.
7. Items specified in individual specification Sections.

1.04 SUBMITTALS

A. Refer to Section 01 3300 for submittal procedures.

B. Training Plans: Submit training plan not less than four (4) weeks prior to start of training.

1. Owner will designate personnel to be trained; tailor training to needs and skill-level of attendees.

2. Provide an overall schedule showing all training sessions.

3. Include at least the following for each training session:

   a. Identification, date, time, and duration.

   b. Description of equipment and / or systems to be covered.

   c. Name of firm and person conducting training; include qualifications.

   d. Objectives of training.

   e. Methods to be used, such as classroom lecture, live demonstrations, hands-on, etc.

   f. Training equipment required, such as projector, projection screen, etc., to be provided by Contractor.

C. Training Manuals: Provide printed training manuals similar to Closeout Submittals - Operating and Maintenance Manuals for each training session specific to that training session; allow for minimum of two (2) attendees per training session. The manuals will be passed out at each training session.

1. Include applicable portion of O&M manuals.

2. Include copies of all hand-outs, slides, overheads, video presentations, etc., that are not included in O&M manuals.

D. Training Reports:

1. Identification of each training session, date, time, and duration.

2. Sign-in sheet showing names and job titles of attendees.

3. List of attendee questions and written answers given, including copies of and references to supporting documentation required for clarification; include answers to questions that could not be answered in original training session.

E. Video Recordings: Submit digital video recording of each demonstration and training session for Owner's subsequent use.

1. Format: 1080p video resolution.

2. Deliverable: DVD Disc - Label each disc and container with session identification and date.

1.05 QUALITY ASSURANCE

A. Instructor Qualifications: Familiar with design, operation, maintenance and troubleshooting of the relevant products and systems.

1. Instructors shall be the most qualified trainer of those contractors and / or installers who actually supplied and installed the systems and equipment.

2. Where a single person is not familiar with all aspects, provide specialists with necessary qualifications.

PART 2 PRODUCTS (NOT USED)

PART 3 EXECUTION

3.01 DEMONSTRATION – GENERAL

A. Demonstrations conducted during system start-up do not qualify as demonstrations for the purposes of this section, unless approved in advance by Owner.

B. Demonstrations conducted during Functional Testing need not be repeated unless Owner personnel training is specified.

C. Demonstration may be combined with Owner personnel training if applicable.

D. Operating Equipment and Systems: Demonstrate operation in all modes, including start-up, shut-down, seasonal changeover, emergency conditions, and troubleshooting, and maintenance procedures, including scheduled and preventive maintenance.

1. For equipment or systems requiring seasonal operation, perform demonstration for other season within six months.

E. Non-Operating Products: Demonstrate cleaning, scheduled and preventive maintenance, and repair procedures.

3.02 TRAINING – GENERAL

A. Conduct training on-site unless otherwise indicated.

B. Owner will provide a room and seating at no cost to Contractor.

C. Do not start training until Functional Testing is complete, unless otherwise specified or approved by the Owner.

D. Provide training in minimum two-hour segments, unless otherwise approved as a part of the submitted training plan.

E. Training schedule will be subject to availability of Owner's personnel to be trained; re-schedule training sessions as required by Owner.

F. Equipment and System Specific Training:

1. Review the applicable O&M manuals.

2. For systems, provide an overview of system operation, design parameters and constraints, and operational strategies.

3. Review instructions for proper operation in all modes, including start-up, shut-down, seasonal changeover and emergency procedures, and for maintenance, including preventative maintenance.

4. Provide hands-on training on all operational modes possible and preventive maintenance.

5. Emphasize safe and proper operating requirements; discuss relevant health and safety issues and emergency procedures.

6. Discuss common troubleshooting problems and solutions.

7. Discuss any peculiarities of equipment installation or operation.

8. Discuss warranties and guarantees, including procedures necessary to avoid voiding coverage.

9. Review recommended tools and spare parts inventory suggestions of manufacturers.

10. Review spare parts and tools required to be furnished by Contractor.

11. Review spare parts suppliers and sources and procurement procedures.

G. Be prepared to answer questions raised by training attendees; if unable to answer during training session, provide written response within three days.

END OF SECTION

SECTION 01 8113

LOW VOC REQUIREMENTS

PART 1 GENERAL

1.01 RELATED DOCUMENTS

A. Drawings and general provisions of the Contract, including General Conditions, Supplementary Conditions and Divisions 00 and 01 Specification Sections, apply to work of this section.

1.02 SECTION INCLUDES

A. Low VOC Requirements for Project.

1.03 REFERENCES

A. References shall be the edition current as of the date of the Contract Documents.

B. GreenSeal GS-11 - Standard for Paints, Coatings, Stains, and Sealers.

C. SCAQMD 1113 - Architectural Coatings.

PART 2 PRODUCTS

2.01 ADHESIVE AND SEALANT VOC REQUIREMENTS

A. Volatile Organic Content (VOC) levels of adhesives and sealants used during construction inside the building envelope shall not exceed levels shown in chart below (levels in grams / Liter).

ADHESIVES AND SEALANTS - MAXIMUM VOC LEVEL CHART * Levels in grams / Liter			
Architectural Applications	**VOC Limit (g/L less water)**	**Specialty Applications**	**VOC Limit (g/L less water)**
Indoor Carpet Adhesives	50	PVC Welding	510
Carpet Pad Adhesives	50	CPVC Welding	490
Wood Flooring Adhesives	100	ABS Welding	325
Rubber Floor Adhesives	60	Plastic Cement Welding	250
Subfloor Adhesives	50	Adhesive Primer for Plastic	550
Ceramic Tile Adhesives	65	Contact Adhesive	80
VCT and Asphalt Adhesives	50	Special Purpose Contact Adhesive	250
Drywall and Panel Adhesives	50	Structural Wood	140

		Member Adhesive	
Cove Base Adhesives	50	Top and Trim Adhesive	250
Multipurpose Construction Adhesives	70		
Structural Glazing Adhesives	100		
Substrate Specific Applications	**VOC Limit (g/L less water)**	**Sealants**	**VOC Limit (g/L less water)**
Metal to Metal	30	Architectural	250
Plastic Foams	50	Roadway	250
Porous Material (except wood)	50	Other	420
Wood	30		
Fiberglass	80		
Reinforced Plastic Composite	250		
Aerosol Adhesives	**VOC Limit (by weight)**	**Sealants**	**VOC Limit (g/L less water)**
General Purpose Mist Spray	65 %	Architectural Non-Porous	250
General Purpose Web Spray	55 %	Architectural Porous	775
General Purpose Aerosol Adhesives (all types)	70 %	Other	750
*Note: This Table excludes adhesives and sealants integral to the waterproofing systems or that are not building related.			

2.02 PAINTS AND COATINGS VOC REQUIREMENTS

A. Volatile Organic Content (VOC) levels of paints and coating used during construction inside the building envelope shall not exceed levels shown in table below (levels in grams / Liter).

PAINTS AND COATINGS - MAXIMUM VOC LEVEL CHART Levels in grams / Liter minus water		
Product Type	**Referenced Standard**	**VOC LIMIT (g/L minus water)**
Flat Coatings	GreenSeal GS-11	50
Non-Flat Coatings	GreenSeal GS-11	100
Non-Flat – High Gloss Coatings	GreenSeal GS-11	150
Rust Preventative Coatings	GreenSeal GS-11	250
Basement Specialty Coatings	GreenSeal GS-11	400
Concrete/Masonry Sealers	GreenSeal GS-11	100
Fire Resistive Coatings	GreenSeal GS-11	350
Floor Coatings	GreenSeal GS-11	100

Primers, Sealers and Undercoaters	GreenSeal GS-11	100
Roof Coatings	GreenSeal GS-11	50
Shellac, Clear	GreenSeal GS-11	730
Shellac, Opaque	GreenSeal GS-11	550
Stains	GreenSeal GS-11	250
Wood Coatings	GreenSeal GS-11	275
Concrete Curing Compounds	SCAQMD 1113	100
Japans / Faux Finishing Coatings: Decorative	SCAQMD 1113	350
Magnesite Cement Coatings	SCAQMD 1113	450
Waterproofing Sealers	SCAQMD 1113	100
Concrete / Masonry Sealers	SCAQMD 1113	100
Wood Preservatives	SCAQMD 1113	350
Low-Solid Coatings	GreenSeal GS-11	120**
**Note: VOC levels for Low-Solids Coatings are measured in grams of VOC per liter of material.		

PART 3 EXECUTION (NOT USED)

END OF SECTION

SECTION 02 1725

EXISTING SITE UTILITIES

PART 1 GENERAL

1.01 RELATED DOCUMENTS

A. Drawings and general provisions of the Contract, including General Conditions, Supplementary Conditions and Divisions 00 and 01 Specification Sections, apply to work of this section.

1.02 SECTION INCLUDES

A. Shutdown requirements for existing utilities.

B. Location, identification and protection of existing public and private site utilities.

1.03 ASSIGNMENT OF UTILITY LOCATE RESPONSIBILITY

A. The Owner will not provide any utility location service for existing utilities and assigns this responsibility to the Contractor.

1.04 GENERAL

A. The Contractor shall, as part of the work of this contract, locate, identify and protect the existing site utilities wherever demolition and earthwork is performed for this project.

B. The Owner will provide whatever assistance, records and drawings that they have to the Contractor in locating and identifying existing utilities but assumes no responsibility for determining existing utility locations.

C. Several underground utilities on this site are owned by the Owner and therefore will not be located by the public utility location service and require a private utility location service to assist in determining their location.

1.05 SHUTDOWNS OF EXISTING UTILITIES

A. Continuity and function of existing equipment and utility services shall be maintained at all times. Utility shutdowns required to facilitate construction work shall be accomplished in accordance with the following requirements.

1. Work shall be scheduled to prevent any interruption of utility services during the times and days that adjacent buildings and sites are occupied and in use by the Owners and the public.

2. Utility shutdowns shall be scheduled during times dictated by the Utility Owner.

3. Schedule shutdown of utilities with the Owner at least fifteen (15) days in advance of shutdown. Owner approval of shutdown, day and time in advance is required.

4. Confirm requests for utility shutdowns in writing with the Owner.

5. The duration of shutdowns shall be held to maximum approved by Utility Owner.

6. Materials and equipment required for the work to be accomplished during shutdown shall be complete and available on the job for review by Owner on the day prior to the shutdown, if requested. If Contractor is not adequately prepared, the shutdown will be canceled and rescheduled.

7. When requested by Owner, the Owner's personnel will take the responsibility for shutting down and restarting equipment and utilities.

1.06 SAFETY CONSIDERATIONS

A. The Contractor is solely responsible for developing a safety plan to protect workers and the public from injury or harm conforming to all Local, State and Federal requirements and for executing and enforcing it on the Project site.

1. Contractor shall consult with their own Geotechnical Engineering expert for determining soil classification relative to safe sloping of soils.

2. Contractor shall determine safe excavation and dewatering methods, monitor excavations and earthwork operations for safety concerns and provide shoring and other protection as required to protect workers.

3. It is not the intent of the Construction Documents to dictate any unsafe construction means or methods; Contractor shall determine means and methods for achieving the work of this section conforming to their safety plan as required to locate and protect existing utilities.

PART 2 PRODUCTS

2.01 EXCAVATION EQUIPMENT FOR POT HOLING

A. Excavation Equipment: Contractor shall select the most appropriate equipment for pot holing excavation including the following:

1. Hand-Digging Equipment: Hand shovels, picks and steel bars as appropriate for conditions.

2. Machine Excavation: Backhoes and other power machine excavation equipment are not suitable for pot holing active utilities that must be protected from damage and maintained operational:

a. Caution: Do not pot hole for active gas, pressurized lines or electrical lines with a backhoe or other power machinery.

3. Hydro Excavation Equipment: High capacity, truck-mounted unit having the following equipment and capabilities:

   a. High capacity, high pressure water pump and jetting equipment, including hoses, probes and heads required for high speed hydro excavation in the soil types and conditions found on project site.

   b. High capacity bulk debris wet vacuum and collection tank capable of sucking the soil and water muck away from the existing underground utility without damage to the utility.

   c. Operator personnel experienced in the safe and proper operation of the equipment.

PART 3 EXECUTION

3.01 COORDINATION

A. Review, coordinate and accommodate work of other trades that interface with, affect or are affected by the work of this section so as to facilitate the execution of the overall Work of this project in a coordinated and efficient manner.

3.02 EXISTING UTILITIES – LOCATION, IDENTIFICATION AND PROTECTION

A. This site contains both public and private existing utilities:

   1. Public Utilities: Utilities owned and operated by utility companies who have either a franchise or contract to provide service to a given area.

   2. Private Utilities: Utilities owned and operated by the project Owner.

   3. Several of the utilities on this site are private utilities requiring a private utility location service to be employed (the public utility location service that responds to calls placed to (800) 424-5555 will not locate private utilities).

B. The street right of way fronting this site contains utilities owned and operated by utility companies who have either a franchise or contract to provide service to this area.

C. Utilities of record are shown on the Drawings insofar as possible to do so based on records available at the time of design.

   1. The exact location, configuration and size of existing utilities can differ from the Drawings and will require that the Contractor provide careful site investigation and working with an experienced utility location service to determine their exact locations and what areas / building they serve.

   2. The Owner and Architect / Engineer assume no responsibility for improper locations or failure to show existing utility locations on the Drawings.

3. The Contractor is responsible for determining the location of all existing utilities prior to commencing work.

4. Utility location requires careful study of the site along with pot holing.

D. **Prior to excavation / construction work** the Contractor shall:

1. Public Utilities: Call underground utility locate service and request utility locations be marked in all areas to be excavated at least 48 hours prior to starting excavation work. After utilities have been located and marked, carefully expose the utility by pot holing wherever the work of this contract will uncover or cross an existing utility.

   a. Contractor shall determine, with the help of the underground utility locate service, what building or area each utility serves.

   b. Locate, pothole, expose and take measures to protect any existing utilities that cross through or could potentially be exposed by the excavation or trenching work of this project.

2. Private Utilities: Locate existing utilities using the method appropriate for the type of utility, including, but not limited to, any of the various types of electronic locators, flow testing, smoke bombs, dye, witching, and pot holing (excavation) methods.

   a. Use of a private underground utility location service with electronic locating equipment is acceptable provided Contractor confirms the electronic locations by carefully exposing the utility by excavation wherever the work of this contract will uncover or cross an existing utility.

   b. Work with Owner to locate, identify and protect existing private utilities whether shown on the Drawings or not.

   c. Contractor shall determine what building or area each utility serves.

   d. Locate, pothole, expose and take measures to protect any existing utilities that cross through or could potentially be exposed by the excavation or trenching work of this project.

   e. If existing utilities are found that are not shown on the Drawings, determine whether they are active or abandoned. If active, determine what areas / buildings they serve and mark their location in the areas affected by the work of this project.

3. Pot Holing Method: Utilize the most appropriate equipment as specified in Part 2 of this section so that existing utility is exposed without damage.

4. Locate and mark all shutoff valves, vaults, catch basins and other control structures / devices which are a part of the underground utilities within the work area or that control utilities within the work area.

5. Confirm exact location, depth and grade of existing underground utilities by uncovering short sections of each utility wherever the work of this contract will uncover or cross an existing utility.

6. Inform Owner of schedule for work as it will directly affect each utility, building or area of the site for utilities that will be shut down and for utilities that will remain in operation during earthwork operations.

7. Make arrangements to have materials and fittings and equipment required to make immediate repair to any utility that is inadvertently damaged during earthwork operations.

8. Provide temporary cover over, or barrier fence around, any excavations left open to prevent any unsafe or hazardous condition for workers or the public.

E. **During excavation / construction work** the Contractor shall:

1. Make provisions for the immediate containment, collection, pumping and shut off (as appropriate) for all utility lines known or suspected to be in the area to prevent damage to the site or wildlife and to adjacent properties, streams or bodies of water.

2. Provide a shut-off key on each valve on pressurized lines that are located within the excavation work area to allow immediate shut off of any pressurized utility line accidentally damaged during excavation. Remove the shut-off key at end of each work day to prevent unauthorized use. Test the existing valve for proper operation (with utility provider present if required) prior to starting excavation work.

3. Protect and maintain all utilities in operational condition during construction; provide temporary pumps, supports, shoring, etc. required to maintain utility operational during the construction work until the utility can be rerouted and / or abandoned.

4. If existing utilities are uncovered that are not shown on the Drawings, advise the Owner immediately and protect utility from damage; determine whether utility is active or abandoned.

F. At Contractor's expense, repair any utilities damaged by construction operations immediately using materials and methods of the type approved or recommended for the specific use required and equal to or exceeding the existing materials / condition.

G. Pot Hole Excavation Backfill: Fill and compact any pothole excavations with structural fill in accordance with requirements in Section 31 2000.

3.03 EXISTING UTILITIES – AS-BUILT DRAWINGS

A. As-Built Drawings: Record each existing utility on the project as-built drawings and indicate the following:

1. Utility type (water, sewer, phone, gas, etc.).

2. Utility size and material (6” PVC, 12” concrete, etc.).

3. Utility location / layout dimensioned from permanent above grade structures.

4. Utility depth below finish grade (top of utility). Indicate the invert elevation on sewer and storm drainage lines at existing manholes, catchbasins or cleanouts.

5. Whether the utility is active or abandoned.

3.04 FIELD QUALITY CONTROL

A. Contractor Quality Control: Employ / assign quality control personnel to monitor the work of this section for conformance to the requirements of the Contract Documents and to good construction practices.

1. Contractor is solely responsible for managing and controlling the quality of the work and conformance with the requirements of the Contract Documents.

END OF SECTION

SECTION 02 4113

SELECTIVE SITE DEMOLITION

PART 1 GENERAL

1.01 RELATED DOCUMENTS

A. Drawings and general provisions of the Contract, including General Conditions, Supplementary Conditions and Divisions 00 and 01 Specification Sections, apply to work of this section.

1.02 SECTION INCLUDES

A. Selective Demolition and Removal of Existing Site Work Items.

B. Backfilling Trenches and Excavations Resulting From Demolition Work.

1.03 REGULATORY REQUIREMENTS

A. Conform to applicable code requirements for demolition of existing site work, safety of adjacent structures, dust control.

B. Obtain required permits from authorities.

C. Notify affected utility companies before starting work and comply with their requirements.

D. Do not close or obstruct roadways without permits.

E. Conform to applicable regulatory procedures when hazardous or contaminated materials are discovered.

1.04 PROJECT CONDITIONS

A. Conduct selective demolition to minimize interference with adjacent occupied buildings.

B. Provide, erect, and maintain all temporary barriers and security devices.

C. Do not close or obstruct site traffic.

D. Verify and identify locations of all existing utilities and building systems; remove and terminate as shown on the Drawings.

1.05 SAFETY CONSIDERATIONS

A. The Contractor is solely responsible for developing a site specific safety plan to protect workers and the public from injury or harm conforming to Local, State and Federal regulations and for executing, monitoring and enforcing it on the Project site.

1. Determine safe excavation and dewatering methods, monitor excavations and earthwork operations for safety concerns and provide shoring and other protection as required to protect workers.

2. Determine the means, methods and equipment required to accomplish required demolition work in accordance with the safety plan. It is not the intent of the Construction Documents to dictate any unsafe construction means or methods.

PART 2 PRODUCTS (NOT USED)

PART 3 EXECUTION

3.01 COORDINATION

A. Review, coordinate and accommodate work of other trades that interface with, affect or are affected by the work of this section so as to facilitate the execution of the overall Work of this project in a coordinated and efficient manner.

B. Coordinate with Section 02 1725 for marking and locating existing site utilities.

3.02 PREPARATION

A. Inspect site with Owner's Representative and verify extent and location of items designated for removal, disposal, alternative disposal, recycling, salvage, and items to remain.

B. Provide, erect, and maintain temporary barriers and security devices.

C. Protect existing appurtenances, structures, site improvements and landscaping that are not scheduled to be demolished.

D. Mark location of utilities, coordinate with Section 02 1725, excavate and remove, cap and / or modify existing utilities to be abandoned as shown on the Drawings.

3.03 DEMOLITION REQUIREMENTS

A. Conduct operations with minimum interference to public or private accesses. Maintain protected egress and access into fenced work area at all times.

B. Sprinkle demolition areas with water to minimize dust. Provide hoses and water connections for this purpose.

3.04 SELECTIVE SITE DEMOLITION

A. Demolish and remove items as indicated on the Drawings.

B. Do not disturb items that are designated to remain in place.

C. Removal of Pavements, Sidewalks, Pavers, Curbs, and Gutters:

1. Square up adjacent surfaces to remain in place by saw cutting or other method approved by Owner's Representative.

2. Protect adjacent joints and load transfer devices.

3. Protect underlying and adjacent granular material.

D. Removal from Site:

1. Interim removal of stockpiled material will be required by Owner's Representative if it is deemed to interfere with operations of Owner's Representative, Owner or other contractors.

E. Backfill:

1. Coordinate backfilling areas excavated, open pits, and holes caused as a result of selective demolition as to avoid any unsafe conditions.

a. Refer to specification Section 31 2000 for backfill of excavated areas, open pits and holes caused by selective demolition.

F. Restoration:

1. Restore areas and existing works outside areas of demolition to match conditions of adjacent, undisturbed areas.

2. Refer to Section 32 1216 for Asphalt Paving, Section 32 1313 for Portland Cement Concrete Paving, and Section 32 1613 for Concrete Sidewalks and Curbs.

3.05 CLEAN UP

A. Upon completion of work, remove debris, trim surfaces and leave work site clean.

B. Use cleaning solutions and procedures which are not harmful to health, are not injurious to plants, and do not endanger wildlife, adjacent water courses or ground water.

3.06 FIELD QUALITY CONTROL

A. Contractor Quality Control: Employ / assign quality control personnel to monitor the work of this section for conformance to the requirements of the Contract Documents and to good construction practices.

1. Contractor is solely responsible for managing and controlling the quality of the work and conformance with the requirements of the Contract Documents.

END OF SECTION

SECTION 03 3000

CAST-IN-PLACE CONCRETE

PART 1 GENERAL

1.01 RELATED DOCUMENTS

A. Drawings and general provisions of the Contract, including General Conditions, Supplementary Conditions and Divisions 00 and 01 Specification Sections, apply to work of this section.

1.02 SECTION INCLUDES

A. Cast-in-Place Concrete.

B. Reinforcing Steel.

C. Concrete Formwork, Shoring and Bracing.

1.03 REFERENCES

A. References shall be the edition current as of the date of the Contract Documents.

B. ACI CODE-318 - Building Code Requirements for Structural Concrete and Commentary.

C. ACI MNL-66 - ACI Detailing Manual.

D. ACI PRC-211.1 - Selecting Proportions for Normal-Density and High Density-Concrete - Guide.

E. ACI PRC-304 - Guide for Measuring, Mixing, Transporting, and Placing Concrete.

F. ACI PRC-305 - Guide to Hot Weather Concreting.

G. ACI PRC-306 - Guide to Cold Weather Concreting.

H. ACI PRC-308 - Guide to External Curing of Concrete.

I. ACI PRC-347 - Guide to Formwork for Concrete.

J. ACI SPEC-301 - Specifications for Concrete Construction.

K. ASTM A615/A615M - Standard Specification for Deformed and Plain Carbon-Steel Bars for Concrete Reinforcement.

L. ASTM C33/C33M - Standard Specification for Concrete Aggregates.

M. ASTM C94/C94M - Standard Specification for Ready-Mixed Concrete.

N. ASTM C143/C143M - Standard Test Method for Slump of Hydraulic-Cement Concrete.

O. ASTM C150/C150M - Standard Specification for Portland Cement.

P. ASTM C231/C231M - Standard Test Method for Air Content of Freshly Mixed Concrete by the Pressure Method.

Q. ASTM C260/C260M - Standard Specification for Air-Entraining Admixtures for Concrete.

R. ASTM C618 - Standard Specification for Coal Ash and Raw or Calcined Natural Pozzolan for Use in Concrete.

S. ASTM C989/C989M - Standard Specification for Slag Cement for Use in Concrete and Mortars.

T. ASTM C1059/C1059M - Standard Specification for Latex Agents for Bonding Fresh to Hardened Concrete.

U. AWS D1.4/D1.4M - Structural Welding Code - Steel Reinforcing Bars.

V. CRSI (DA4) - Manual of Standard Practice.

W. IBC - International Building Code.

X. PS 1 - Structural Plywood.

1.04 SUBMITTALS

A. Refer to Section 01 3300 for submittal procedures.

B. Product Data: For each type of manufactured material and product indicated.

C. Design Mixes: For each concrete mix, submit proposed mix designs a minimum of 15 days in advance of placing operations for each type of concrete. The submitted mix designs shall include the following:

1. Supporting test data for mixes that is not more than 12 months old. Include a sufficient number of tests and conduct a statistical analysis in compliance with ACI SPEC-301.

2. Gradation of fine and coarse aggregates not more than 90 days old showing compliance with ASTM C33/C33M.

3. Proportions of ingredients, including admixtures added either at the time of batching or at the job site. Aggregate weights shall be based upon saturated surface dry conditions.

4. Water / cement ratio.

5. Slump as measured according to ASTM C143/C143M. Provide slump test for each mix.

6. Air content of freshly mixed concrete as measured according to ASTM C231/C231M.

7. Strength measured at 7 and 28 days. Provide strength test for each mix at a frequency of both the 7th and 28th day.

8. Certifications that ingredients in each mix are compatible.

9. Locations or intended use of each mix design.

10. Source of materials.

D. Steel Reinforcement Shop Drawings: Details of fabrication, bending, and placement prepared according to ACI MNL-66, “ACI Detailing Manual.”

1. Include material, grade, bar schedules, stirrup spacing, bent bar diagrams, arrangement and supports of concrete reinforcement.

2. Include special reinforcement required for openings through concrete structures.

3. Provide placement details for specific reinforcing intersections and clearance conditions not shown by the typical details on the Structural Drawings.

4. Prepare drawings in sufficient detail to resolve reinforcing intersections.

E. Embedded Item Placement Drawings: Drawings indicating the location and type of plates, anchorages, or other items to be embedded in the finished concrete surfaces.

1.05 QUALITY ASSURANCE

A. Perform form work in accordance with ACI PRC-347, ACI SPEC-301, and ACI CODE-318.

B. Perform concrete work in accordance with ACI 301 and ACI CODE-318.

C. Acquire cement from same source and aggregate from same source for entire project.

D. Follow recommendations of ACI PRC-305 when concreting during hot weather.

E. Follow recommendations of ACI PRC-306 when concreting during cold weather.

1.06 DESIGN RESPONSIBILITY – FORMWORK, BRACING AND SHORING

A. Contractor is responsible for designing and engineering the formwork along with the associated bracing and shoring to withstand forces imposed during construction.

PART 2 PRODUCTS

2.01 FORM MATERIALS

A. Form Materials (Except at Concrete Exposed to View): Provide per ACI PRC-347 at discretion of Contractor.

B. Form Material for Concrete Exposed to View: APA rated B-B High Density Overlay Concrete Form plywood, Class I, conforming to PS 1.

1. Plywood shall be new or used once with face free of defects and nail holes filled.

2. Thickness shall be adequate to prevent visible deflection of plywood from force of wet concrete and the resulting waviness of the finish wall surface.

2.02 FORMWORK ACCESSORIES

A. Form Ties: Cone type snap ties designed to break off below face of wall after formwork is stripped, galvanized metal, fixed length, free of defects that could leave holes larger than 1-inch in concrete surface.

1. Strength and spacing as required to resist fresh concrete placement and vibration loads.

B. Shoring and Bracing: Provide materials / system designed by Contractor to withstand imposed construction forces.

C. Form Release Agent: Colorless, non-staining, will not adversely affect surface coatings or waterproofing. Provide form release agent that does not contain diesel fuel, petroleum-based lubricating oils, waxes, or kerosene.

D. Corners: Filleted, rigid plastic type; 3/4-inch x 3/4-inch size; maximum possible lengths.

E. Nails, Spikes, Lag Bolts, Through Bolts, Anchorages: Sized as required, of sufficient strength and character to maintain formwork in place while placing concrete.

2.03 INSERTS AND EMBEDS

A. Inserts and Embeds: Steel or ductile iron, type and configuration suitable for intended load / connection and rated for intended load with generous margin of safety.

2.04 REINFORCEMENT

A. Reinforcing Steel: Steel reinforcing bars conforming to ASTM A615/A615M, Grade 60, or as noted on Structural Drawings.

B. Reinforcement Accessories:

1. Tie Wire: Annealed, minimum 16 gauge.

2. Chairs, Bolsters, Bar Supports, Spacers: Sized and shaped for adequate support of reinforcement during concrete placement.

a. Provide stainless steel or plastic components for placement within 1-1/2-inches of weathering surfaces.

2.05 REINFORCEMENT FABRICATION

A. Fabricate concrete reinforcing in accordance with CRSI (DA4) Manual of Standard Practice.

B. Welding of reinforcement is permitted only with the specific approval of Structural Engineer. Perform welding in accordance with AWS D1.4/D1.4M.

C. Locate reinforcing splices not indicated on Drawings at point of minimum stress with specific approval of Structural Engineer.

D. No bending or straightening of reinforcing shall be permitted after partial embedment in concrete.

2.06 CONCRETE MATERIALS

A. Concrete: As specified in General Notes on the Structural Drawings.

1. Cement: Conform to ASTM C150/C150M as specified in the General Notes on the Structural Drawings.

2. Slag: Ground granulated blast furnace slag conforming to ASTM C989/C989M Grade 100 or 120.

3. Flyash: Conform to ASTM C618, Class F.

a. Manufacturers:

1) Boral Material Technologies, Inc.

2) Full Circle Solutions, Inc.

3) Headwater Resources, Inc.

4) Holcim US, Inc.

5) Lafarge North America

6) Mineral Resources Technologies, LLC

7) Mineral Solutions, Inc.

8) The SEFA Group.

4. Aggregates: Crushed aggregate meeting the requirements of ASTM C33/C33M as specified in Structural General Notes.

5. Water: Potable and complying with ASTM C94/C94M.

2.07 CONCRETE ADMIXTURES

A. Admixtures: As specified in Structural General Notes.

B. Exterior Concrete – Air Entrainment: Provide 5 to 7 percent (by volume) using air entrainment admixture conforming to ASTM C260/C260M.

2.08 CONCRETE MIX DESIGN

A. Proportioning Normal Weight Concrete: Provide concrete mix design that will result in concrete as specified in the General Notes on the Structural Drawings. Comply with ACI PRC-211.1 recommendations.

2.09 CONCRETE MIXING

A. Transit Mixers: Comply with ASTM ASTM C94/C94M.

2.10 CONCRETE ACCESSORIES

A. Bonding Agent: ASTM C1059/C1059M, Type II acrylic non-redispersable type.

B. Non-Shrink Grout: As specified in General Notes on the Structural Drawings.

2.11 JOINT DEVICES AND MATERIALS

A. Waterstops: Self-healing, non-swelling preformed joint sealant waterstop.

1. Manufacturer / Product: Henry, *SF302 Synko-Flex Waterstop* is the basis of design and the standard of quality, function, performance and appearance required for this project.

a. Henry; *SF302 Synko-Flex Waterstop* (specified, basis of design).

b. Products by other manufacturers may be acceptable, subject to their ability to meet or exceed this standard and provide products conforming with the requirements of the Drawings and this Specification.

c. Substitutions: Refer to Section 01 6000 for substitution procedures and requirements. Proposed substitutions must match specified product performance.

B. Sealant and Primer: As Specified in Section 07 9000.

PART 3 EXECUTION

3.01 COORDINATION

A. Review, coordinate and accommodate work of other trades that interface with, affect or are affected by the work of this section so as to facilitate the execution of the overall Work of this project in a coordinated and efficient manner.

B. Coordinate and facilitate installation of embedded structural items with Section 05 1200.

C. Coordinate and adjust concrete mix and additives to comply with requirements of manufacturers of coatings, sealants and adhesives applied to concrete.

D. Coordinate and facilitate rough-in for mechanical and electrical items in concrete construction with Divisions 21 through 28.

3.02 EXAMINATION

A. Verify lines, levels, and dimensions before proceeding with work of this section.

3.03 FORMWORK – ERECTION

A. Erect formwork, shoring and bracing to achieve design requirements, in accordance with requirements of ACI SPEC-301.

B. Provide bracing to ensure the stability of formwork. Shore or strengthen formwork subject to overstressing by construction loads to provide support and limit deflection of formwork to specified criteria.

C. Arrange and assemble formwork to permit dismantling and stripping. Do not damage concrete during stripping. Permit removal of remaining principal shores.

D. Obtain approval before framing openings in structural members that are not indicated on Drawings.

E. Coordinate this section with other sections of work that require attachment of components to formwork.

3.04 FORMWORK – FORM RELEASE AGENT

A. Apply form release agent on formwork in accordance with manufacturer's recommendations.

1. Protect reinforcing steel, inserts and bonding surfaces from application of any form release agent.

B. Apply prior to placement of reinforcing steel, anchoring devices, and embedded items.

C. Do not apply form release agent where concrete surfaces will receive special finishes or applied coverings that are affected by form release agent. Soak inside surfaces of untreated forms with clean water. Keep surfaces coated prior to placement of concrete.

3.05 FORMWORK – INSERTS AND EMBEDDED PARTS

A. Provide formed openings where required for items to be embedded in passing through concrete work.

B. Locate and set in place items that will be cast directly into concrete.

C. Coordinate with work of other sections in forming and placing openings, slots, reglets, recesses, sleeves, bolts, anchors, other inserts, and components of other work.

D. Install accessories in accordance with manufacturer's instructions, so they are straight, level, and plumb. Ensure items are not disturbed during concrete placement.

E. Install waterstops in accordance with manufacturer's instructions, so they are continuous without displacing reinforcement.

3.06 FORMWORK – CLEANING

A. Clean forms as erection proceeds, to remove foreign matter within forms.

B. Clean formed cavities of debris prior to placing concrete.

1. Flush with water or use compressed air to remove remaining foreign matter. Ensure that water and debris drain to exterior through clean-out ports.

2. During cold weather, remove ice and snow from within forms. Do not use de-icing salts. Do not use water to clean out forms, unless formwork and concrete construction proceed within heated enclosure. Use compressed air or other means to remove foreign matter.

3.07 REINFORCEMENT – PLACEMENT

A. Place, support and secure reinforcement against displacement. Do not deviate from required position.

B. Accommodate placement of formed openings.

C. Bend tie wire back behind the line of rebar on weathering surfaces.

D. Conform to applicable code for concrete cover over reinforcement.

3.08 CONCRETE – PREPARATION

A. Verify that forms are clean and free of rust before applying release agent.

B. Coordinate placement of joint devices with erection of concrete formwork and placement of form accessories.

C. Prepare previously placed concrete by cleaning with steel brush and applying bonding agent in accordance with manufacturer's instructions.

3.09 CONCRETE – ADMIXTURES

A. Mix admixtures into concrete mix as recommended by admixture manufacturer.

3.10 CONCRETE – PLACEMENT

A. Place concrete in accordance with ACI PRC-304, vibrate concrete thoroughly to eliminate voids, air pockets and rock pockets.

B. Ensure reinforcement, inserts, waterstops, embedded parts, and formed construction joint devices will not be disturbed during concrete placement.

1. Provide waterstops as shown on Drawings and at any cold joints top, bottom, or along concrete walls at elevator pit.

C. Maintain records of concrete placement. Record date, location, quantity, air temperature, and test samples taken.

D. Do not interrupt successive placement; do not permit cold joints to occur.

3.11 CONCRETE - FINISHING

A. Top of Footings and Foundation Walls: Float finish the top of concrete footings and foundation walls to a smooth, straight, level surface, free of variations of top elevation exceeding 1/4-inch in 10 feet.

1. Where top of footing will receive sheet waterproofing, finish surface smooth to tolerances required by waterproofing manufacturer.

B. Repair surface defects, including tie holes, immediately after removing formwork.

C. Concrete Finish Where Not Exposed To View: Rub down or chip off fins or other raised areas 1/8-inch or more in height.

D. Surfaces to Receive Waterproofing: Rub down entire surface and chip off fins, grind rough areas smooth, fill tie holes, rock pockets, voids, air holes, “bug holes”, etc. with cement grout flush with adjacent surfaces, prepare surface in accordance with waterproofing manufacturer's requirements.

3.12 CONCRETE – CURING AND PROTECTION

A. Cure concrete in accordance with ACI PRC-308 ; leave forms in place for as long as practicable after pouring concrete, but in no case less than 3 days.

B. Protect concrete from damage after forms are removed; do not damage surface of concrete during removal of forms.

3.13 WORKMANSHIP

A. Concrete shall be installed using the best workmanship, including the following:

1. Reinforcing steel set back from face of concrete required distance.

2. Architectural concrete and surfaces exposed to view free of waviness or deflection from inadequate form construction.

3. No tie wire or reinforcement within 1-inch of any concrete surface.

4. Proper consolidation of concrete, free of rock pockets or voids.

B. Any part of the concrete work installed with improper or poor workmanship shall be removed and replaced at Contractor's expense.

3.14 FIELD QUALITY CONTROL

A. Contractor Quality Control: Employ / assign quality control personnel to monitor the work of this section for conformance to the requirements of the Contract Documents and to good construction practices.

1. Contractor is solely responsible for managing and controlling the quality of the work and conformance with the requirements of the Contract Documents.

B. Owner will engage a qualified independent testing and inspection agency to perform field inspections, field quality-control sampling / testing and prepare test reports, in accordance with Section 01 4500 and the testing requirements noted on the Structural Drawings.

1. Contractor shall:

a. Submit proposed concrete mix design of each class of concrete to agency for review prior to commencement of concrete operations.

b. Coordinate and schedule inspection and testing of reinforcing steel and concrete work by the agency at the appropriate times and prior to cover.

c. Provide testing agency with access to the work to allow required inspections and testing.

d. Correct deficiencies or remove and replace any work that inspections and test reports indicate do not comply with specified requirements.

2. Tests taken are spot checks only at a given location and shall not be interpreted as representing the quality or integrity of the concrete work performed.

3. Test data and reviews shall not be construed as acceptance of the work by the testing agency nor shall it relieve the Contractor of his responsibility to replace non-conforming or failed work.

4. Tests of concrete and concrete materials may be performed at any time to ensure conformance with specified requirements.

5. Schedule of Required Inspections and Tests: Refer to Structural Drawings for quality assurance and special inspection requirements for field fabrications and as required by requirements of the IBC, including but not necessarily limited to the following:

   a. Inspect reinforcing steel materials and placement for conformance to Contract Documents prior to placement of any concrete.

   b. Inspect and test concrete for conformance to Contract Documents, including but not necessarily limited to the following:

      1) Confirmation of proper design mix.

      2) Visual inspection of concrete during placement.

      3) Compression testing.

      4) Percentage of entrained air testing.

      5) Determination / confirmation of water / cement ratio.

   c. Slump Testing:

      1) Slump: ASTM C143/C143M; provide one test at point of discharge or each day's pour of each type of concrete; additional tests when concrete consistency seems to have changed.

END OF SECTION

SECTION 03 3001

CONCRETE FLOOR SLABS

PART 1 GENERAL

1.01 RELATED DOCUMENTS

A. Drawings and general provisions of the Contract, including General Conditions, Supplementary Conditions and Divisions 00 and 01 Specification Sections, apply to work of this section.

1.02 SECTION INCLUDES

A. Formwork, Reinforcing, Placement, Finishing, and Curing for:

1. Concrete Slabs on Grade.

B. Shoring and Bracing.

C. Underslab Vapor Retarder Sheet.

D. Moisture Control and Curing Treatment.

1.03 RELATED SECTIONS

A. The means and methods selected and the quality control provided for constructing the concrete floor slabs specified in this section directly affect the floor preparation work specified in Section 03 3003; diligent management and quality control of the concrete floor slab construction is required.

B. The concrete floor slabs specified in this section shall conform to the requirements of the flooring and sealing system manufacturers specified in the following sections:

1. 03 3500 - Polished Concrete Floor Finishing.

2. 09 3000 - Tile.

3. 09 6100 - Concrete Floor Sealing.

4. 09 6500 - Resilient Flooring.

1.04 REFERENCES

A. References shall be the edition current as of the date of the Contract Documents.

B. ACI CODE-318 - Building Code Requirements for Structural Concrete and Commentary.

C. ACI MNL-66 - ACI Detailing Manual.

D. ACI PRC-211.1 - Selecting Proportions for Normal-Density and High Density-Concrete - Guide.

E. ACI PRC-302.1 - Guide to Concrete Floor and Slab Construction.

F. ACI PRC-304 - Guide for Measuring, Mixing, Transporting, and Placing Concrete.

G. ACI PRC-305 - Guide to Hot Weather Concreting.

H. ACI PRC-306 - Guide to Cold Weather Concreting.

I. ACI PRC-347 - Guide to Formwork for Concrete.

J. ACI SPEC-301 - Specifications for Concrete Construction.

K. ADA Standards - 2010 ADA Standards for Accessible Design.

L. ASTM A615/A615M - Standard Specification for Deformed and Plain Carbon-Steel Bars for Concrete Reinforcement.

M. ASTM C33/C33M - Standard Specification for Concrete Aggregates.

N. ASTM C94/C94M - Standard Specification for Ready-Mixed Concrete.

O. ASTM C143/C143M - Standard Test Method for Slump of Hydraulic-Cement Concrete.

P. ASTM C150/C150M - Standard Specification for Portland Cement.

Q. ASTM C231/C231M - Standard Test Method for Air Content of Freshly Mixed Concrete by the Pressure Method.

R. ASTM C494/C494M - Standard Specification for Chemical Admixtures for Concrete.

S. ASTM C979/C979M - Standard Specification for Pigments for Integrally Colored Concrete.

T. ASTM C1059/C1059M - Standard Specification for Latex Agents for Bonding Fresh to Hardened Concrete.

U. ASTM D1751 - Standard Specification for Preformed Expansion Joint Filler for Concrete Paving and Structural Construction (Nonextruding and Resilient Bituminous Types).

V. ASTM D1752 - Standard Specification for Preformed Sponge Rubber, Cork, and Recycled PVC Expansion Joint Fillers for Concrete Paving and Structural Construction.

W. ASTM E96/E96M - Standard Test Methods for Gravimetric Determination of Water Vapor Transmission Rate of Materials.

X. ASTM E1155 - Standard Test Method for Determining FF Floor Flatness and FL Floor Levelness Numbers.

Y. ASTM E1745 - Standard Specification for Plastic Water Vapor Retarders Used in Contact with Soil or Granular Fill under Concrete Slabs.

Z. ASTM F1249 - Standard Test Method for Water Vapor Transmission Rate Through Plastic Film and Sheeting Using a Modulated Infrared Sensor.

AA. AWS D1.4/D1.4M - Structural Welding Code - Steel Reinforcing Bars.

BB. CRSI (DA4) - Manual of Standard Practice.

CC. ICC A117.1 - Accessible and Usable Buildings and Facilities.

DD. PS 1 - Structural Plywood.

1.05 SUBMITTALS

A. Refer to Section 01 3300 for submittal procedures.

B. Product Data: Submit product data for the following:

1. Concrete design mix(s) from concrete supplier for each different floor slab condition.

2. Moisture Control and Curing Treatment.

3. Underslab Vapor Retarder and its accessories.

C. Design Mixes: For each concrete mix, submit proposed mix designs a minimum of 15 days in advance of placing operations for each type of concrete. The submitted mix designs shall include the following:

1. Supporting test data for mixes that is not more than 12 months old. Include a sufficient number of tests and conduct a statistical analysis in compliance with ACI SPEC-301.

2. Gradation of fine and coarse aggregates not more than 90 days old showing compliance with ASTM C33/C33M.

3. Proportions of ingredients, including admixtures added either at the time of batching or at the job site. Aggregate weights shall be based upon saturated surface dry conditions.

4. Water / cement ratio.

5. Slump as measured according to ASTM C143/C143M. Provide slump test for each mix.

6. Air content of freshly mixed concrete as measured according to ASTM C231/C231M.

7. Strength measured at 7 and 28 days. Provide strength test for each mix at a frequency of both the 7th and 28th day.

8. Certifications that ingredients in each mix are compatible.

9. Locations or intended use of each mix design.

10. Source of materials.

D. Control Joint Layout Drawings:

1. Provide drawing showing compliance with locations of control joints.

2. Prepare drawings in sufficient detail to resolve reinforcing intersections.

E. Steel Reinforcement Shop Drawings: Details of fabrication, bending, and placement prepared according to ACI MNL-66, “ACI Detailing Manual.”

1. Include material, grade, bar schedules, stirrup spacing, bent bar diagrams, arrangement, and supports of concrete reinforcement.

2. Include special reinforcement required for openings through concrete structures.

3. Provide placement details for all specific reinforcing intersections and clearance conditions not shown by the typical details on the Structural Drawings.

4. Prepare drawings in sufficient detail to resolve reinforcing intersections.

F. Embedded Item Placement Drawings: Drawings indicating the location and type of plates, anchorages, or other items to be embedded in the finished concrete surfaces.

1.06 QUALITY ASSURANCE

A. Perform concrete work in accordance with ACI SPEC-301 and ACI CODE-318.

B. Acquire cement from same source and aggregate from same source for entire project.

C. Follow recommendations of ACI PRC-305 when concreting during hot weather.

D. Follow recommendations of ACI PRC-306 when concreting during cold weather.

1.07 REGULATORY REQUIREMENTS

A. Concrete finished as a walking surface shall comply with the following per ICC A117.1:

1. Have a slip-resistant finish per Sections 302 and 403.

2. Changes in level shall comply with Sections 403.4 and 303.

3. Openings in floor surfaces shall comply with Section 302.3.

4. ADA Standards Accessibility Tolerances: Comply with ADA Standards tolerances shown on the Drawings.

1.08 PRE-INSTALLATION CONFERENCE

A. Prior to start of concrete floor slab placement, Contractor shall schedule a pre-installation conference at the job site to review the project conditions and construction requirements.

B. Persons attending pre-installation conference shall include the Contractor, concrete / finishing subcontractor, concrete floor foreman, finish floor covering installer(s), Architect, and Owner.

C. Coordinate the concrete floor slab pre-installation conference with the pre-installation conference for the polished floor system specified in Section 03 3500.

1.09 COORDINATION AND SEQUENCING

A. Coordinate schedule with other trades where embedments, attachments or interferences occur.

B. Schedule and sequence concrete work to coordinate with fabrication and delivery schedules for items to be embedded in concrete work.

1.10 PRODUCT DELIVERY, STORAGE AND HANDLING

A. Store materials in accordance with ACI SPEC-301. Admixtures which have been in storage at the project site for longer than 6 months or which have been subjected to freezing shall not be used, unless retested and proven to meet the specific requirements.

B. Deliver, store and handle steel reinforcement to prevent bending and damage.

1.11 CONTRACTOR RESPONSIBILITY

A. Contractor is responsible for designing and engineering the formwork along with the associated bracing and shoring to withstand imposed forces during construction.

B. Contractor is responsible for coordinating and controlling the installation and protection of the entire concrete slab assembly including the capillary break, protection of underslab vapor retarder, selection of concrete design mix conforming to design criteria, control of water added to concrete on the site, placement of concrete, slab finishing methods, slab curing methods and dry-out of the concrete slabs so as to achieve a slab with minimal uncontrolled cracking, and conforming to the finish flooring and coating / sealer manufacturer(s) requirements for successful application of their products.

1.12 WARRANTY – MOISTURE CONTROL AND CURING TREATMENT

A. Manufacturer's Fifteen (15) Year Warranty: Provide the moisture control and curing treatment manufacturer's standard warranty document executed by an authorized company official wherein the manufacturer shall warrant against the adhesive bond of floor coverings / coatings separating from the concrete substrate due to vapor emission rate, relative humidity, water migration or alkalinity of the concrete in the treated areas and shall repair or replace any failed floor moisture control and curing treatment, adhesives, floor coverings and coatings in the failed areas at no expense to the Owner for a period of fifteen (15) years.

PART 2 PRODUCTS

2.01 FORMWORK MATERIALS

A. Form Materials (Except at Concrete Exposed to View): Provide per ACI PRC-347 at discretion of Contractor.

B. Form Material for Concrete Exposed to View: APA rated B-B High Density Overlay Concrete Form plywood, Class I, conforming to PS 1.

1. Plywood shall be new, or used once with face free of defects and nail holes filled.

2.02 FORMWORK ACCESSORIES

A. Form Release Agent: Colorless, non-staining, will not adversely affect surface coatings or waterproofing. Provide form release agent that does not contain diesel fuel, petroleum-based lubricating oils, waxes, or kerosene.

B. Nails, Spikes, Lag Bolts, Through Bolts, Anchorages: Sized as required, of sufficient strength and character to maintain formwork in place while placing concrete.

2.03 INSERTS AND EMBEDS

A. Inserts and Embeds: Steel or ductile iron, type and configuration suitable for intended load / connection and rated for intended load with generous margin of safety.

2.04 REINFORCEMENT

A. Reinforcing Steel: Steel reinforcing bars conforming to ASTM A615/A615M, Grade 60, or as noted on Structural Drawings.

B. Reinforcement Accessories:

1. Tie Wire: Annealed, minimum 16 gauge.

2. Chairs, Bolsters, Bar Supports, Spacers: Sized and shaped for adequate support of reinforcement during concrete placement.

a. Where reinforcement is installed over underslab vapor retarder, provide metal or concrete support pads that will not damage the vapor retarder.

b. Provide stainless steel or plastic components for placement within 1-1/2 inches of weathering surfaces.

2.05 REINFORCEMENT FABRICATION

A. Fabricate concrete reinforcing in accordance with CRSI (DA4) Manual of Standard Practice.

B. Welding of reinforcement is permitted only with the specific approval of Structural Engineer. Perform welding in accordance with AWS D1.4/D1.4M.

C. Locate reinforcing splices not indicated on Drawings at point of minimum stress with specific approval of Structural Engineer.

D. No bending or straightening of reinforcing shall be permitted after partial embedment in concrete.

2.06 CONCRETE MATERIALS

A. Concrete: As specified in General Notes on the Structural Drawings.

1. Cement: Conform to ASTM C150/C150M as specified in the General Notes on the Structural Drawings.

2. Flyash / Slag: Not allowed.

3. Aggregates: Crushed aggregate meeting the requirements of ASTM C33/C33M as specified in Structural General Notes.

4. Water: Potable and complying with ASTM C94/C94M.

2.07 CONCRETE ADMIXTURES

A. Admixtures: As specified in General Notes on the Structural Drawings.

B. Color Admixture: Conform to ASTM C979/C979M.

1. Manufacturer / Product: Scofield, A SIKA Brand, *Chromix* is the basis of design and the standard of quality, function, performance and appearance required for this project.

    a. Scofield, A SIKA Brand; *Chromix* (specified, basis of design).

    b. Products by other manufacturers may be acceptable, subject to their ability to meet or exceed this standard and provide products conforming with the requirements of the Drawings and this Specification.

    c. Substitutions: Refer to Section 01 6000 for substitution procedures and requirements. Proposed substitutions must match specified product performance and colors.

2. Colors: _____.

C. Water-Reducing Super-Plasticizer Admixture – Conform to ASTM C494/C494M, Type F, provide water reducing, super-plasticizing admixture to concrete mix as required to maintain the water / cement ratio specified herein and improve workability and slump required for proper placement, consolidation and finishing.

2.08 CONCRETE MIX DESIGN

A. Proportioning Normal Weight Concrete: Provide concrete mix design that will result in concrete as specified in the General Notes on the Structural Drawings and this section. Comply with ACI PRC-211.1 recommendations. Conform with the following special requirements:

1. Special Requirements: In addition to the requirements of the General Notes on the Structural Drawings, conform to the following:

    a. Adjust the concrete mix to achieve concrete with a water / cement ratio of 0.40 or less.

    b. Add Water-Reducing Super-Plasticizer Admixture.

    c. Concrete slabs with moisture sensitive flooring / adhesive shall have a pH of 9 or less after curing and dehydration.

2.09 CONCRETE MIXING

A. Transit Mixers: Comply with ASTM C94/C94M.

2.10 CONCRETE ACCESSORIES

A. Control Joint: T-shaped vinyl control joint.

1. Manufacturers / Products: Subject to their ability to conform to the requirements of the Drawings and this Specification, the following manufacturers may provide products:

a. W.R. Meadows; *Speed-E-Joint.*

b. ZipStrip.

c. Substitutions: Refer to Section 01 6000 for substitution procedures and requirements.

B. Floor Slab Control / Expansion Joints: Rigid expansion joint filler conforming to ASTM D1751 or ASTM D1752 as required by sealant manufacturer.

1. Removable Top: Provide with plastic removable top.

a. Manufacturer / Product: W.R. Meadows, *Snap-Cap* is the basis of design and the standard of quality, function, performance and appearance required for this project.

1) W.R. Meadows; *Snap-Cap* (specified, basis of design).

2) Products by other manufacturers may be acceptable, subject to their ability to meet or exceed this standard and provide products conforming with the requirements of the Drawings and this Specification.

3) Substitutions: Refer to Section 01 6000 for substitution procedures and requirements. Proposed substitutions must match specified product performance.

2. Joint Width: 3/8-inch.

C. Bonding Agent: ASTM C1059/C1059M, Type II acrylic non-redispersable type.

D. Non-Shrink Grout: As specified in General Notes on the Structural Drawings.

2.11 VAPOR RETARDER FOR SLAB ON GRADE

A. Performance Requirement: The installed underslab vapor retarder shall provide an airtight and vapor tight sheet barrier under the entire building floor slab conforming to the following:

1. Moisture Vapor Transmission Rate: Less than 0.3 perms when tested in accordance with ASTM E96/E96M and ASTM F1249.

B. Vapor Retarder Sheet: 15 mil polyolefin film manufactured from virgin resins; conforming to ASTM E1745 Class A.

1. Manufacturers / Products: Subject to their ability to conform to the requirements of the Drawings and this Specification, the following manufacturers / products may be provided:

a. Henry; *Moistop Ultra 15.*

b. Stego Industries, LLC; *Stego Wrap Vapor Barrier (15-Mil).*

c. W.R. Meadows.; *Perminator 15 Mil.*

d. ISI Building Products; *Viper Vaporcheck II (Viper II) 15-mil.*

e. Substitutions: Refer to Section 01 6000 for substitution procedures and requirements.

C. Accessories For Underslab Vapor Retarder:

1. Tape – Perimeter Attachment To Concrete: Stego Industries, *Crete Claw Tape* or Stego Industries, *StegoTack Tape*, or equal products from the vapor retarder sheet manufacturers specified above.

2. Tape – Seams, Tears and Splices: Stego Industries, *Stego Tape*, or equal products from the vapor retarder sheet manufacturers specified above.

3. Mastic: Stego Industries, *Stego Mastic*, or equal products from the vapor retarder sheet manufacturers specified above.

4. Boots at Pipe / Conduit Penetrations: Factory fabricated pipe boots from vapor retarder material with welded seam vapor tight construction, Stego Industries, *Pre-Cut Pipe Boots* or equal products from the vapor retarder sheet manufacturers specified above.

5. Tie Wraps (Cable Ties): Heavy duty UV stabilized Nylon 6/6, minimum 120 pound working strength, size as required to fit condition.

a. Manufacturer / Product: Unicorp, *Cable Ties* are the basis of design and the standard of quality, function, performance and appearance required for this project.

1) Unicorp; *Cable Ties* (specified, basis of design).

2) Products by other manufacturers may be acceptable, subject to their ability to meet or exceed this standard and provide products conforming with the requirements of the Drawings and this Specification.

3) Substitutions: Refer to Section 01 6000 for substitution procedures and requirements. Proposed substitutions must match specified product performance.

2.12 SCREED SYSTEM

A. Contractor shall select a screed support system that does not penetrate or damage the underslab vapor retarder while providing the level control required to achieve the floor slab surface tolerances specified.

B. Coordinate flush pipe and conduit penetrations through slab with Divisions 21 through 28 if required to accommodate screed system selected.

C. Polished Concrete Floors: Provide screed rail system with 8 mm wide colored plastic strip top extender; available locally from Mason Supply.

1. Manufacturer / Product: CombiForm, *CombiForm AB* is the basis of design and the standard of quality, function, performance and appearance required for this project.

a. CombiForm; *CombiForm AB* (specified, basis of design).

b. Products by other manufacturers may be acceptable, subject to their ability to meet or exceed this standard and provide products conforming with the requirements of the Drawings and this Specification.

c. Substitutions: Refer to Section 01 6000 for substitution procedures and requirements. Proposed substitutions must match specified product performance.

2. Plastic Strip Colors: As selected by Architect.

2.13 MOISTURE CONTROL AND CURING TREATMENT

A. Moisture Control and Curing Treatment: Liquid field-applied penetrating colloidal treatment that reacts with the free alkali in concrete to form a permanent colloidal gel within the concrete to prevent moisture migration through the concrete, reduce shrinkage cracking and slab curl and seal concrete from the inside out to provide a superior cure and prevent premature dry out of the concrete.

1. Manufacturer / Product: Spray-Lock, *SCP-327* is the basis of design and the standard of quality, function, performance and appearance required for this project.

a. Spray-Lock; *SCP-327* (specified, basis of design).

b. Products by other manufacturers may be acceptable, subject to their ability to meet or exceed this standard and provide products conforming with the requirements of the Drawings and this Specification.

c. Substitutions: Refer to Section 01 6000 for substitution procedures and requirements. Proposed substitutions must match specified product performance.

2. Treatment Area: Treat entire surface area of concrete floor slabs.

3. Manufacturer Warranty: Provide fifteen (15) year warranty by Spray-Lock on floor covering / sealing installation as specified in Part 1 of this section.

B. Cold Weather Curing: Refer to additional requirements specified in Structural General Notes, including use of insulating blankets to prevent floor slabs from freezing temperatures.

PART 3 EXECUTION

3.01 COORDINATION

A. Review, coordinate and accommodate work of other trades that interface with, affect or are affected by the work of this section so as to facilitate the execution of the overall Work of this project in a coordinated and efficient manner.

B. Coordinate and facilitate concrete slab construction to meet requirements of floor covering manufacturers.

C. Coordinate and adjust concrete mix and additives to comply with requirements of manufacturers of coatings, sealants and adhesives applied to concrete.

D. Coordinate and facilitate rough-in for mechanical and electrical items in concrete construction with Divisions 21 through 28.

E. Coordinate and facilitate floor slab slope and heights of floor drains with Division 22 to assure adequate drainage.

3.02 EXAMINATION

A. Verify lines, levels, and dimensions before proceeding with work of this section.

3.03 PREPARATION

A. Verify that forms are clean and free of rust before applying release agent.

B. Remove standing water and debris.

C. Coordinate placement of joint devices with erection of concrete formwork and placement of form accessories.

D. Prepare previously placed concrete by cleaning with steel brush and applying bonding agent in accordance with manufacturer's instructions.

E. Utilize screed support system for slabs with underslab vapor retarder that does not penetrate or damage the vapor retarder.

F. Protection: Install temporary protection over adjacent exposed to view finish surfaces to protect them from concrete splatter during placing and finishing.

3.04 FORMWORK

A. Edge Forms:

1. Construct edge forms and bracing as required to achieve design requirements, in accordance with requirements of ACI SPEC-301.

2. Arrange and assemble forms to permit dismantling and stripping so as to avoid damage to concrete during stripping.

3. Apply form release agent on forms in accordance with manufacturer's recommendations.

a. Protect reinforcing steel, inserts, and bonding surfaces from application of any form release agent.

B. Screeds: Construct a rigid screed system to facilitate placement of concrete to a uniform flat plane; with uniform slope where shown or required for drainage.

1. Slabs with Underslab Vapor Retarder: Use screed support system that does not penetrate or damage the vapor retarder during concrete placement.

C. Inserts and Embedded Parts:

1. Locate and set in place items that will be cast directly into concrete.

2. Coordinate with work of other sections in forming and placing bolts, anchors, other inserts, and components of other work.

3. Install accessories in accordance with manufacturer's instructions, so they are straight, level, and plumb. Ensure items are not disturbed during concrete placement.

D. Install construction joint devices in coordination with floor slab pattern placement sequence. Set top to required elevations. Secure to resist movement by wet concrete.

3.05 INSTALLATION – UNDERSLAB VAPOR RETARDER

A. Install continuous vapor retarder sheet under interior slabs on grade, place over the capillary break and directly under concrete slab.

1. Extend vapor retarder sheet to top of slab at perimeter of slab and seal to concrete foundation wall with specified tape to achieve air and vapor tight connection.

B. Lap joints minimum 6-inches and seal air and vapor tight by applying continuous tape or a continuous 1/2-inch diameter bead of the specified mastic.

C. Install factory fabricated air and vapor tight "boot" at pipe and conduit penetrations through floor slab. Extend “boot” to top of slab elevation; seal "boot" to vapor retarder watertight using tape or continuous 1/2-inch diameter bead of the specified mastic full circumference of penetration and seal “boot” to pipe / conduit with specified mastic and a nylon tie wrap cinched down tight over top of “boot” to achieve an air and vapor tight seal.

D. Protect vapor retarder from damage during construction.

E. Seal cuts and holes in vapor retarder with a patch of the same material cut 6 inches larger than cut / hole; seal full perimeter of patch to vapor retarder with tape or continuous 1/2-inch diameter bead of the specified mastic to achieve an air and vapor tight seal.

F. The installed vapor retarder installation shall provide a continuous air and vapor tight sheet membrane over the entire building and have a continuous air and vapor tight seal to the foundation walls and any penetrations through the vapor retarder.

3.06 REINFORCING STEEL – PLACEMENT

A. Comply with CRSI (DA4) "Manual of Standard Practice" for placing reinforcement.

B. Clean reinforcement of loose mill scale, earth, ice and other foreign matter.

C. Do not displace or damage underslab vapor retarder.

D. Accurately position, support and secure reinforcement against displacement. Locate and support reinforcement with bar supports to maintain concrete cover and position.

E. Defective Work: The following reinforcing steel work will be considered defective, and shall be removed and replaced by the Contractor at no additional cost to the Owner:

1. Bars with kinks or bends not shown in the Drawings.

2. Bars damaged due to bending or straightening.

3. Bars heated for bending.

4. Reinforcement not placed in accordance with the Drawings.

F. Bend tie wire back behind the line of rebar on weathering surfaces.

G. Conform to applicable code for concrete cover over reinforcement.

3.07 CONSTRUCTION AND CONTROL JOINTS

A. Construction Joints: Construct full depth keyed form in configuration shown on Drawings or as approved by Architect.

B. Control Joints at Exposed to View Conditions:

1. Plastic Removable Top Slab Control / Expansion Joints: Install rigid expansion joint full depth of slab with removable plastic top at joint locations shown on the Drawings.

a. Install expansion joint plumb, straight and true.

b. Provide stiffener member as required to maintain straight joint at construction joints.

C. Contractor's Options for Slab On Grade Control Joints at Concealed Conditions under Floor Covering:

1. Option #1 : Install T-shaped vinyl control joint in slab at joint locations shown on the Structural Drawings.

2. Option #2 - Sawed Joints: Form contraction joints with power saws. Cut 1/8-inch wide joints into concrete when cutting action will not tear, abrade, or otherwise damage surface and before concrete develops random contraction cracks.

3.08 TOLERANCES

A. Floor Slab Surface Tolerances - General: Floor slabs shall be constructed to achieve the following maximum variation of surface flatness tolerance:

1. ADA Standards Accessibility Tolerances: Comply with applicable ADA Standards tolerances shown on the Drawings.

2. Visual Flatness: No rippling, roughness or visible variations in surface flatness.

3. Measured Flatness: 1/4-inch in 10 feet measured in any location, orientation or direction with a 10 foot long straight edge as shown below:

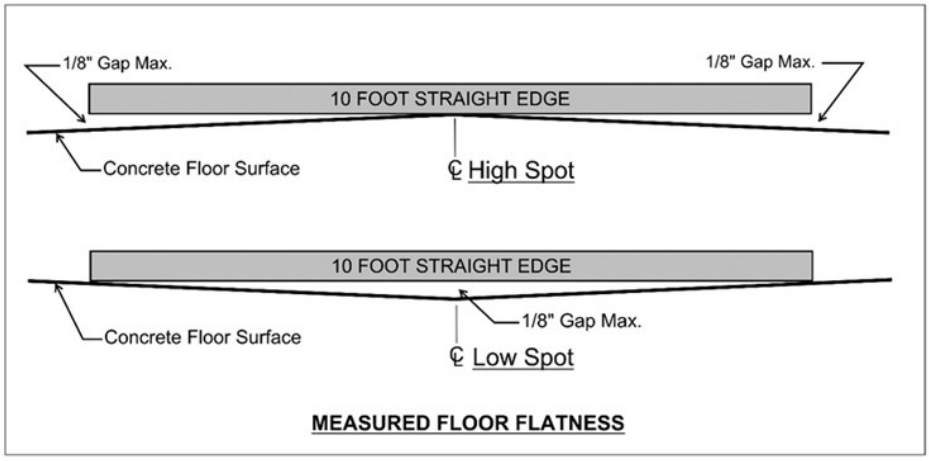

B. Polished Concrete Floors: Conform to the following Floor Flatness (FF) and Floor Levelness (FL) values as defined by ASTM E1155:

1. Floor Flatness (FF) rating of at least 50.

2. Floor Levelness (FL) rating of at least 30.

C. Floor Slabs With Thinset Ceramic Tile: Conform to the tile manufacturer's recommendations for floor slab surface tolerance.

3.09 CONCRETE – PLACEMENT

A. Place concrete in accordance with ACI PRC-304.

B. Place concrete for floor slabs in accordance with ACI PRC-302.1.

C. Notify Architect not less than 24 hours prior to commencement of placement operations.

D. Ensure reinforcement, inserts, embedded parts, and formed construction joint devices will not be disturbed during concrete placement.

E. Protect the underslab vapor retarder from damage during concrete placement. Repair vapor retarder damaged during placement of concrete reinforcing or concrete. Repair with vapor retarder material; lap over damaged areas minimum 6-inches and seal watertight.

F. Install construction joint devices in coordination with floor slab pattern placement sequence. Set top to required elevations. Secure to resist movement by wet concrete.

G. Maintain records of concrete placement. Record date, location, quantity, air temperature, and test samples taken.

H. Place concrete continuously between predetermined expansion, control joints, and construction joints.

I. Do not interrupt successive placement; do not permit cold joints to occur.

J. Place floor slabs with joint locations as shown on the Drawings and approved by Architect.

K. Screed floors to a level flat plane, maintaining specified surface flatness.

L. In Areas with Floor Drains: Maintain design floor elevation at walls; slope surfaces uniformly to drains as indicated on Drawings or as directed by Architect (minimum 1/8-inch per foot nominal). Ponding water around drains is not acceptable.

1. Floors with Floor Covering: Hold top of concrete below top of grate to allow floor covering to install flush with top of drain grate. Coordinate height of drain grate to match floor covering.

3.10 FLOOR FINISHING

A. General: Finish concrete floor surfaces with bull float, wood / magnesium hand floats and steel trowels in accordance with ACI SPEC-301, ACI PRC-302.1 and the finish flooring manufacturer's requirements.

1. Do not sprinkle water on slab while finishing.

2. Do not dust slab with cement powder while finishing.

B. Floors Scheduled to Receive Finish Flooring and Interior Concrete Floors Exposed to View:

1. Steel trowel surfaces to a smooth finish, free of ripples or surface defects and that conforms to the floor covering manufacturer's requirements.

2. If power trowels are used, do a light troweling only, do not over trowel or "burn" the slab surface.

3.11 CONCRETE – CURING

A. Moisture Control and Curing Treatment: Schedule / coordinate application of moisture control and curing treatment to concrete floors by manufacturer's Technical Representative as soon as finishing is completed and concrete is hard enough to support foot traffic without damaging surface in conformance with manufacturer's installation requirements.

3.12 PROTECTION

A. Protect concrete slabs from stains, contact with oil or grease and damage during construction.

B. Slabs Exposed to View: Do not leave steel, sawdust, wood or any other material that can cause a stain on the floor surface to prevent staining of floor surface.

1. Remove any stains that occur on floor surface.

3.13 WORKMANSHIP

A. Concrete floor slabs shall be installed using the best workmanship, including the following:

1. Underslab vapor retarder sheet installed as specified and protected from damage.

2. Conform to specified water / cement ratio.

3. Adequate number of cement finishers on site to finish slab properly.

4. Consistent finish appearance on slabs exposed to view.

5. Slab surface flatness finished to within specified tolerances.

6. Steel trowel finish consistently smooth and flat, free of trowel marks, ridges or imperfections.

7. No waviness, ripples or imperfections in smooth trowel finish slab surface.

8. No ponding water where floor is intended to slope to drains.

9. Floor surface with proper slope towards and relationship with floor drains.

10. Slab curing method applied and maintained for entire curing time.

11. Minimal uncontrolled cracking and edge curl.

12. Slab finish not “burned” or over-troweled.

13. No water or cement powder added after placement during finishing.

B. Any part of the concrete slabs installed with improper or poor workmanship shall be removed and replaced at Contractor’s expense.

3.14 FIELD QUALITY CONTROL

A. Contractor Quality Control: Employ / assign quality control personnel to monitor the work of this section for conformance to the requirements of the Contract Documents and to good construction practices.

1. Contractor is solely responsible for managing and controlling the quality of the work and conformance with the requirements of the Contract Documents.

2. Underslab Vapor Retarder Installation: Inspect vapor retarder field, seams / laps, connection to perimeter walls and each penetration for damage; confirm that the vapor retarder installation provides a continuous, unbroken gas and vapor tight barrier.

a. Confirm that any damaged or non-conforming vapor retarder is repaired prior to placement of concrete.

B. Owner will engage a qualified independent testing and inspection agency to perform field inspections, field quality-control sampling / testing and prepare test reports, in accordance with Section 01 4500 and the testing requirements noted on the Structural Drawings.

1. Contractor shall:

a. Submit proposed concrete mix design of each class of concrete to agency for review prior to commencement of concrete operations.

b. Coordinate and schedule inspection and testing of reinforcing steel and concrete work by the agency at the appropriate times and prior to cover.

c. Provide testing agency with access to the work to allow required inspections and testing.

d. Correct deficiencies or remove and replace any work that inspections and test reports indicate do not comply with specified requirements.

C. Coordinate and schedule the work to accommodate inspections and tests of reinforcing steel and concrete construction as specified on the Structural Drawings.

D. Tests taken are spot checks only at a given location and shall not be interpreted as representing the quality or integrity of the concrete work performed.

E. Test data and reviews shall not be construed as acceptance of the work by the testing agency nor shall it relieve the Contractor of his responsibility to replace non-conforming or failed work.

F. Tests of concrete and concrete materials may be performed at any time to ensure conformance with specified requirements.

G. Slump Testing: ASTM C143/C143M; provide one (1) test at point of discharge for each day's pour of each type of concrete; additional tests when concrete consistency seems to have changed.

END OF SECTION

SECTION 03 3003

CONCRETE FLOOR SLAB PREPARATION

PART 1 GENERAL

1.01 RELATED DOCUMENTS

A. Drawings and general provisions of the Contract, including General Conditions, Supplementary Conditions and Divisions 00 and 01 Specification Sections, apply to work of this section.

1.02 SECTION INCLUDES

A. Preparation of Concrete Slabs scheduled to receive Coatings, Adhesives, or Finish Flooring.

1.03 RELATED SECTIONS

A. The means and methods selected and the quality control provided for constructing the concrete floor slabs specified in Section 03 3001 directly affect the duration and difficulty factor related to the work of this section; diligent management and quality control of the concrete floor slab construction is required.

B. The Finish Flooring referenced in this section applies to the flooring and sealing materials specified in following sections:

1. 09 3000 - Tile.

2. 09 6100 - Concrete Floor Sealing.

3. 09 6500 - Resilient Flooring.

1.04 REFERENCES

A. References shall be the edition current as of the date of the Contract Documents.

B. ASTM F710 - Standard Practice for Preparing Concrete Floors to Receive Resilient Flooring.

1.05 ENVIRONMENTAL REQUIREMENTS

A. The roofing must be installed and all exterior openings closed in.

B. Areas shall be maintained in a heated and dry condition.

PART 2 PRODUCTS

2.01 CEMENTITIOUS UNDERLAYMENT

A. Cementitious Underlayment / Subfloor Filler: Portland cement-based underlayment formulated specifically for patching and filling concrete slabs on grade, 4,200 psi compressive strength; capable of feather edge installation; not adversely affected by moisture or alkali.

1. Manufacturer / Product: Ardex, *SD-P* is the basis of design and the standard of quality, function, performance and appearance required for this project.

a. Ardex; *SD-P* (specified, basis of design).

b. Products by other manufacturers may be acceptable, subject to their ability to meet or exceed this standard and provide products conforming with the requirements of the Drawings and this Specification.

c. Substitutions: Refer to Section 01 6000 for substitution procedures and requirements. Proposed substitutions must match specified product performance.

PART 3 EXECUTION

3.01 COORDINATION

A. Review, coordinate and accommodate work of other trades that interface with, affect or are affected by the work of this section so as to facilitate the execution of the overall Work of this project in a coordinated and efficient manner.

B. Coordinate concrete placement, finishing and curing / drying requirements with Section 03 3001.

C. Inspect the surface finish and tolerances on the concrete slabs with the finish flooring installer(s) and identify any areas that are not acceptable for installation of their products.

D. Coordinate requirements for preparation of floor slabs scheduled to receive finish flooring to conform to each different finish flooring manufacturer's requirements.

3.02 EXAMINATION

A. Verify that concrete floor slab surfaces are smooth and flat within tolerances specified in Section 03 3001 and are ready to receive finish flooring.

B. Verify that surfaces are dust-free, and free of substances which would impair bonding of adhesive materials to surfaces.

C. Verify that required floor-mounted utilities are in correct location and installed to proper height to receive finish flooring material flush with top surface.

3.03 PREPARATION

A. General: Prepare concrete slabs in conformance with ASTM F710, finish flooring manufacturer's requirements and the following.

1. Preparation work specified herein is not applicable to exposed to view concrete floors scheduled to receive a sealer which is specified in Section 09 6100.

B. Rough or Uneven Slabs: Grind smooth any surface roughness, ridges, bumps or out of tolerance high areas. Fill minor low spots, cracks, joints, holes, out of tolerance low areas and other defects with cementitious underlayment to achieve smooth, flat, hard surface suitable for finish flooring installation. Prepare substrate by shot blasting and install cementitious underlayment in strict conformance to manufacturer's installation instructions. Slab surface shall be smooth and free of waviness, irregularities or unevenness of plane upon completion.

1. Do not install any cementitious underlayment until concrete floor slab drying has achieve required humidity and moisture vapor emission rate required by finish flooring system manufacturers.

2. Prohibit traffic until underlayment is cured.

C. Contaminated or Stained Concrete (oil, grease, wax, asphalt, etc.): Remove contaminated concrete by mechanical means (shot blasting, grinding, scabbling, jackhammer, etc.) and patch affected area with cementitious underlayment or new concrete slab as applicable condition. Do not use solvents or removers.

1. Patching does not apply to concrete slabs exposed to view with sealer; remove these slabs to closest control or construction joints and replace concrete.

2. Do not install any cementitious underlayment until concrete floor slab drying has achieve required humidity and moisture vapor emission rate required by finish flooring system manufacturers.

D. Vacuum clean floor surfaces.

3.04 FIELD QUALITY CONTROL

A. Contractor Quality Control: Employ / assign quality control personnel to monitor the work of this section for conformance to the requirements of the Contract Documents and to good construction practices.

1. Contractor is solely responsible for managing and controlling the quality of the work and conformance with the requirements of the Contract Documents.

END OF SECTION

SECTION 03 3500

POLISHED CONCRETE FLOOR FINISHING

PART 1 GENERAL

1.01 RELATED DOCUMENTS

A. Drawings and general provisions of the Contract, including General Conditions, Supplementary Conditions and Divisions 00 and 01 Specification Sections, apply to work of this section.

1.02 SECTION INCLUDES

A. Polishing Concrete Floors.

B. Hardener and Sealer.

C. Floor Joint Filler (Sealant).

1.03 PERFORMANCE REQUIREMENTS

A. Performance Requirements: The installed polished concrete floor shall meet the following Performance Requirements:

1. Appearance: Consistent level of polish for uniform sheen and reflectivity matching approved mock-up over the entire polished concrete floor area.

2. High Traction Rating:

a. Dynamic Coefficient of Friction: For walkway surfaces, provide products with the following values as determined by ANSI/NFSI B101.3:

1) Level Surfaces: Minimum 0.42 (Wet).

b. Static Coefficient of Friction: For walkway surfaces, provide products with the following values as determined by ANSI/NFSI B101.1:

1) Level Surfaces: Minimum 0.60 (Wet).

1.04 REFERENCES

A. References shall be the edition current as of the date of the Contract Documents.

B. ANSI/NFSI B101.1 - Test Method for Measuring the Wet SCOF of Hard-Surface Walkways.

C. ANSI/NFSI B101.3 - Test Method for Measuring the Wet DCOF of Hard Surface Walkways.

D. ASTM E1155 - Standard Test Method for Determining FF Floor Flatness and FL Floor Levelness Numbers.

1.05 SUBMITTALS

A. Refer to Section 01 3300 for submittal procedures.

B. Product Data: Submit manufacturer's product data sheets for specified products.

C. Procedures: Concrete slab preparation and concrete grinding procedures.

D. Certificates:

1. Letter or report of certification from an independent laboratory confirming that the system has been tested and passed high traction ratings listed in the Performance Requirements of this Section.

2. Current certificate signed by manufacturer declaring installer is an approved installer of polishing system.

E. Operation and Maintenance Data: Submit operation and maintenance data for installed products in accordance with Section 01 7823; include the following:

1. Manufacturer's instructions on maintenance renewal of applied treatments.

2. Protocols and product specifications for joint filing, crack repair and / or surface repair.

1.06 QUALITY ASSURANCE

A. Installer Qualifications: Installer trained and holding certification from Manufacturer for installation of the polished concrete floor system at the time of the installation. Installer shall employ adequate number of skilled workmen who are thoroughly trained and experienced in polishing concrete floors.

B. Manufacturer Qualifications: Manufacturer with a minimum of five (5) years of experience in manufacturing components similar to, or exceeding requirements of this project and capable of providing field service representation during construction and approving application method.

1.07 MOCK-UP

A. Construct mock-up for review and approval by Architect and Owner Representative(s).

B. Mock-Up Size: 100 square foot sample panel of polished concrete at job site in location agreed upon by all parties under conditions similar to those which will exist during actual placement and finishing.

C. Mock-up will be used to judge workmanship, concrete substrate preparation, operation of equipment, material application, color selection and shine.

D. Allow ten (10) working days for review of mock-up before proceeding with work.

E. When accepted, mock-up will demonstrate minimum standard of quality required for this work. Approved mock-up may remain as part of finished work, unacceptable mock-ups shall be removed and replaced until an acceptable mock-up is provided.

1.08 PRE-INSTALLATION CONFERENCE

A. Prior to start of concrete floor slab placement, Contractor shall schedule a pre-installation conference at the job site to review the project conditions, construction requirements, manufacturer's installation instructions, and the following:

1. Concrete mix and placement requirements.
2. Environmental requirements.
3. Scheduling and phasing of work.
4. Coordinating with other work and personnel.
5. Protection of adjacent surfaces.
6. Surface preparation.
7. Repair of defects and defective work prior to installation.
8. Cleaning.
9. Installation of polished floor finishes.
10. Application of liquid hardener and sealer.
11. Protection of finished surfaces after installation.
12. Review completed mock-up.

B. Persons attending pre-installation conference shall include the Contractor, polished concrete floor finishing subcontractor, polished concrete system manufacturer's designated field service representative, concrete floor foreman, Architect, and Owner.

C. Polished Concrete Floor system installer shall also attend the Concrete Floor Slab pre-installation conference as specified in Section 03 3001.

1.09 DELIVERY, STORAGE AND HANDLING

A. Deliver materials in manufacturer's original packaging with identification labels and seals intact.

B. Dispense special concrete finish material from factory numbered and sealed containers. Maintain record of container numbers.

C. Store materials protected from exposure to harmful weather conditions and at temperature conditions recommended by manufacturer.

1.10 PROTECTION OF CONCRETE SLAB

A. Protect from petroleum stains during construction.

B. Restrict use of pipe cutting machinery.

C. Restrict placement of steel items directly on slab.

D. Restrict use of acids or acidic detergents on slab.

E. Restrict placement of anything on the slab that could stain or discolor it.

1.11 PROJECT CONDITIONS

A. Comply with manufacturers written instructions for substrate temperature and moisture content, ambient temperature and humidity, ventilation, and other conditions affecting polishing performance.

1. Concrete Floor Flatness (FF) rating at least 50 when tested in accordance with ASTM E1155.

2. Concrete Floor Levelness (FL) rating at least 30 when tested in accordance with ASTM E1155.

3. Concrete must be cured a minimum of 45 days.

4. Application shall take place 10 days prior to installation of equipment and substantial completion, thus providing a complete, uninhibited concrete slab for application.

B. Close areas to traffic during floor polishing and after sealer application as recommended by manufacturer.

1.12 EXTRA MATERIALS

A. Provide cleaning solution for Owner's use in sufficient quantity for one (1) year of normal maintenance on the area of polished floor installed.

PART 2 PRODUCTS

2.01 POLISHED CONCRETE FLOORS FINISHING SYSTEM

A. Manufacturers / Systems: Subject to their ability to conform to the requirements of the Drawings and this Specification, the following manufacturers / systems may be provided:

1. Ameripolish; *Polished Concrete System.*

2. CureCrete; *Retro Plate Concrete Polishing System.*

3. Scofield, A SIKA Brand; *Formula One System.*

4. Substitutions: Refer to Section 01 6000 for substitution procedures and requirements. Proposed substitutions must match specified products performance and finish.

B. Polished Concrete Finish:

1. Aggregate Exposure Level: Expose fine sand aggregate only. Do not expose coarse aggregate.

2. Level of Polish: Polished finish, 800 resin grit finish.

C. Grinding Equipment: Planetary grinding equipment must be capable of providing a multiple step process starting with course metal bond diamonds and ending with fine resin bond diamonds.

D. Hardener / Densifier:

1. Manufacturers / Products: Subject to their ability to conform to the requirements of the Drawings and this Specification, the following manufacturers / products may be provided:

a. Ameripolish; *3D HS.*

b. CureCrete; *Retro Plate 99.*

c. Scofield, A SIKA Brand; *Formula One Lithium Densifier MP.*

d. Substitutions: Refer to Section 01 6000 for substitution procedures and requirements. Proposed substitutions must match specified products performance.

E. Sealer:

1. Manufacturers / Products: Subject to their ability to conform to the requirements of the Drawings and this Specification, the following manufacturers / products may be provided:

a. Ameripolish; *SR2 Plus.*

b. CureCrete; *RetroGuard.*

c. Scofield, A SIKA Brand; *Formula One Guard-W.*

d. Substitutions: Refer to Section 01 6000 for substitution procedures and requirements. Proposed substitutions must match specified products performance and finish.

F. Control and Construction Joints: Joint construction is specified in Section 03 3001. Provide joint filler as follows:

1. Joint Filler: Semi-rigid, 2-component, self-leveling, 100% solids, rapid curing, polyurea control joint and crack filler with Shore A 80 or higher hardness compatible with finish system.

G. Cleaning Solution: Proprietary, mild, highly concentrated liquid concrete cleaner and conditioner containing wetting and emulsifying agents; biodegradable, environmentally safe and certified High Traction by National Floor Safety Institute (NFSI).

2.02 SOURCE QUALITY CONTROL

A. Ensure concrete finishing components and materials are from single manufacturer or approved in writing by the manufacturer.

PART 3 EXECUTION

3.01 COORDINATION

A. Review, coordinate and accommodate work of other trades that interface with, affect or are affected by the work of this section so as to facilitate the execution of the overall Work of this project in a coordinated and efficient manner.

B. Coordinate the concrete design mix, placement, finishing and curing of the concrete slabs with Section 03 3001.

3.02 EXAMINATION

A. Verify that site conditions and concrete floor slab, installed previously by other sections, are acceptable for polishing and product installation in accordance with manufacturer's instructions prior to installation of concrete finishing materials.

B. Do not start work until all unacceptable conditions have been corrected.

C. Start of installation indicates installer's acceptance of site conditions and concrete floor slab.

3.03 PREPARATION

A. Concrete floor surfaces shall be clean and free of dirt and other foreign matter harmful to performance of concrete finishing materials.

B. Examine surface to determine soundness of concrete for polishing.

C. Remove any surface contamination.

D. Grind floor prior to densifier installation using 80 or 200 grit diamond impregnated pads to remove construction debris, floor slab imperfections and until there is a uniform scratch pattern and light sand finish.

3.04 INSTALLATION – JOINT FILLER

A. Clean and prepare joints in accordance with joint filler manufacturer's requirements.

B. Fill joints with joint filler flush to surface in accordance with manufacturer's installation instructions and matching the concrete color specified in Section 03 3001.

3.05 INSTALLATION – FLOOR POLISHING AND FINISHING

A. Polish floor in accordance with the polished concrete floor system manufacturer's instructions and matching the approved mock-up.

B. Grind the concrete floor until the specified aggregate exposure level is obtained. The first cut shall be performed with a metal bond diamond.

C. Apply liquid hardener according to the manufacturer's instructions. Allow 12 hours to cure before continuing.

D. Finish honing and polishing the floor to specified level.

E. After the polishing process has been completed apply two (2) coats of sealer in accordance with manufacturer's instructions. Allow to cure for 2-4 hours.

F. Using a high-speed burnishing machine and diamond impregnated pads, burnish the surface to the specified gloss level.

3.06 WORKMANSHIP

A. Polished concrete floors shall be finished using the best workmanship, including the following:

1. Coordination of proper concrete slab construction with Section 03 3001.

2. Use of proper equipment in good working order.

3. No coarse aggregate or reinforcing steel exposed by polishing process.

4. Consistent finish sheen and reflectivity on floors.

5. Polished finish shall be consistently smooth and flat, free of grinding / polishing marks, ridges or imperfections.

6. No waviness, ripples or imperfections in finished floor surface.

7. Edges and perimeters of floors finished to match the field.

8. Finish sealers applied at rates recommended by manufacturer.

9. Proper protection of finished floor from construction damage or stains.

B. Any part of the polished concrete floor installed with improper or poor workmanship shall be removed and replaced at Contractor's expense.

3.07 FINAL CLEANING

A. Upon completion, remove surplus and excess materials, rubbish, tools and equipment.

3.08 PROTECTION

A. Protect completed floors from damage until building is turned over to the Owner.

B. Protect floors by installing Scofield, A SIKA Brand, *Proguard Duracover*, or comparable product.

3.09 FIELD QUALITY CONTROL

A. Contractor Quality Control: Employ / assign quality control personnel to monitor the work of this section for conformance to the requirements of the Contract Documents and to good construction practices.

1. Contractor is solely responsible for managing and controlling the quality of the work and conformance with the requirements of the Contract Documents.

3.10 SCHEDULE – REFER TO DRAWINGS

END OF SECTION

SECTION 03 5413

GYPSUM UNDERLAYMENT

PART 1 GENERAL

1.01 RELATED DOCUMENTS

A. Drawings and general provisions of the Contract, including General Conditions, Supplementary Conditions and Divisions 00 and 01 Specification Sections, apply to work of this section.

1.02 SECTION INCLUDES

A. Placement, Finishing and Curing of Gypsum Underlayment System.

B. Acoustic Mat.

C. Crack Suppression Mat.

1.03 PERFORMANCE REQUIREMENTS

A. Performance Requirements: Installed Gypsum Cement Underlayment shall conform to the following:

1. Compressive Strength: 3,200 PSI minimum.

1.04 REFERENCES

A. References shall be the edition current as of the date of the Contract Documents.

B. ACI PRC-302.1 - Guide to Concrete Floor and Slab Construction.

C. ASTM C472 - Standard Test Methods for Physical Testing of Gypsum, Gypsum Plasters, and Gypsum Concrete.

1.05 SUBMITTALS

A. Refer to Section 01 3300 for submittal procedures.

B. Product Data: Submit product data for the following:

1. Gypsum Underlayment.

2. Acoustic Mat.

3. Crack Suppression Mat.

4. Wall Isolation Strip.

C. Installer Qualification Submittal: Copy of Certified Applicator Statement from system manufacturer.

1.06 QUALITY ASSURANCE

A. Installer Qualifications: Installation of Gypsum Underlayment shall be by an applicator authorized by product manufacturer and using mixing and pumping equipment approved by the manufacturer.

B. Acquire Gypsum Underlayment from same source for entire project.

C. Testing: Installed Gypsum Cement Underlayment shall be tested for conformance to the Performance Requirements as specified in Part 3 Field Quality Control in this section.

1.07 PRE-INSTALLATION CONFERENCE

A. Prior to start of gypsum cement underlayment placement, Contractor shall schedule a pre-installation conference at the job site to review the project conditions and construction requirements.

B. Persons attending pre-installation conference shall include the Contractor, underlayment subcontractor, underlayment installation foreman, finish floor covering installer(s), Architect, and Owner.

1.08 PRODUCT DELIVERY, STORAGE AND HANDLING

A. Materials shall be delivered in their original, unopened packages, and protected from exposure to the elements. Damaged or deteriorated materials shall be removed from the premises.

1.09 PROJECT CONDITIONS

A. Environmental Requirements: Before, during and after installation of Gypsum Cement Underlayment, building interior shall be enclosed, with adequate ventilation and heat maintained at a temperature above 50 °F to allow for drying of product.

PART 2 PRODUCTS

2.01 GYPSUM UNDERLAYMENT SYSTEM

A. Gypsum Cement:

1. Manufacturers / Products: Subject to their ability to conform to the requirements of the Drawings and this Specification, the following manufacturers / products may be provided:

   a. Floor Prep.com by Dependable; *GSL M3.4.*

   b. Hacker Industries; *Firm-Fill 2010+.*

c. Maxxon Corporation; *Gyp-Crete 2000 Multifamily.*

d. U.S. Gypsum; *Levelrock.*

e. Substitutions: Refer to Section 01 6000 for substitution procedures and requirements. Proposed substitutions must match specified products performance.

B. Acoustic Mat / Wall Isolation Strip:

1. Manufacturers / Products: Subject to their ability to conform to the requirements of the Drawings and this Specification, the following manufacturers / products may be provided:

a. Hacker Industries; *Firm-Fill SCM-250 or Sound Mat II.*

b. Keene Building Products; *Quiet Qurl 025.*

c. Maxxon Corporation; *Acousti-Mat 1/4 Premium.*

d. U.S. Gypsum; *Levelrock SRM-25 Ready Seam Sound Reduction Mat.*

e. Substitutions: Refer to Section 01 6000 for substitution procedures and requirements. Proposed substitutions must match specified products performance.

C. Materials:

1. Gypsum Cement Underlayment: Gypsum cement meeting the performance requirements listed in Part 1.

a. Sand Aggregate: Sand shall be 1/8-inch or less, washed masonry or plaster sand, meeting manufacturer's requirements.

b. Mix Water: Potable, free from impurities.

2. Subfloor Primer: As recommended by underlayment manufacturer.

3. Acoustic Mat: 0.25-inch thick composite of extruded nylon filaments forming a 3-dimensional mesh matrix with a non-woven fabric heat bonded to the upper surface.

4. Crack Suppression Mat: As recommended by underlayment manufacturer.

5. Wall Isolation Strip: 2-inch wide strip of acoustic mat.

6. Sealer for Adhesively Applied Floor Covering: As recommended by manufacturer and approved for use with adhesively applied floor covering.

2.02 MIX DESIGN

A. General Requirements: Mix proportions and methods shall be in strict accordance with manufacturer's recommendations and testing result to conform to the Performance Requirements specified herein.

PART 3 EXECUTION

3.01 COORDINATION

A. Review, coordinate and accommodate work of other trades that interface with, affect or are affected by the work of this section so as to facilitate the execution of the overall Work of this project in a coordinated and efficient manner.

B. Scheduling: Underlayment installation shall not begin until the building is enclosed, including roof, windows, doors and other fenestration.

1. Install after drywall installation.

2. Coordinate time frame for installation of gypsum underlayment so that it is not subjected to heavy construction traffic, dirt, water, etc., that would damage the underlayment.

C. Coordinate and facilitate Gypsum Underlayment construction to meet requirements of floor covering manufacturers.

D. Coordinate and adjust Gypsum Underlayment mix to comply with requirements of manufacturers of coatings, sealants and adhesives applied to Gypsum Underlayment.

E. Coordinate and facilitate rough-in for mechanical and electrical items in Gypsum Underlayment construction with mechanical and electrical contractors.

3.02 EXAMINATION

A. Inspect subfloor installation and installation conditions for conformance to manufacturer's requirements.

B. Verify lines, levels, and dimensions before proceeding with work of this section.

C. Do not start installation until subfloor, lines, levels and installation conditions are in conformance with manufacturer's requirements.

D. Start of installation indicates acceptance of subfloor and installation conditions as conforming to manufacturer's requirements.

3.03 PREPARATION

A. Subfloor shall be cleaned to remove construction debris, nails, screws, dirt, mud, oil, grease and other contaminating factors before Gypsum Underlayment construction begins.

B. Fill cracks and voids with quick setting patching or caulking material where leakage of Gypsum Underlayment could occur.

C. Prime clean subfloor according to manufacturer's recommendations.

D. Place expansion joints to continue through the Gypsum Underlayment at the same width.

3.04 INSTALLATION – ACOUSTIC MAT AND CRACK SUPPRESSION MAT

A. Install Acoustic Mat in conformance with manufacturer's installation instructions.

1. Tape seams between Mats continuously in conformance with manufacturer's installation instructions.

2. Acoustic Mat shall be free floating; do not attach to subfloor with nails, screws or staples.

B. Install continuous Wall Isolation Strips around the entire perimeter of each room / space and any vertical penetrations of the floor in conformance with manufacturer's installation instructions; tape in place, do not use nails, screws or staples for attachment.

1. Apply continuous tape between edge of Mat and Isolation Strip to prevent leakage of Underlayment.

C. Install Crack Suppression Mat over Acoustic Mat in conformance with manufacturer's installation instructions; butt tight at seams.

3.05 INSTALLATION – GYPSUM UNDERLAYMENT

A. Inspection: Inspect entire area to receive Underlayment and confirm that the Underlayment will be free floating and not connected to the building structure or walls in any way except through contact with the Acoustic Mat and Wall Isolation Strips (no nails, screws, staples, or openings that would permit leakage of Underlayment into or under the Sound Deadening Mat).

1. Correct any conditions that would bridge or negate the sound isolation properties of the Acoustic Mat and Wall Isolation Strip prior to placement of Underlayment.

B. Priming Substrate:

1. Over Wood Subfloor: Prime clean subfloor in conformance with Underlayment manufacturer's instructions based on condition and type of subfloor.

C. Place Gypsum Cement Underlayment at thicknesses indicated on the Drawings in conformance with manufacturer's installation instructions.

D. Spread and screed Gypsum Underlayment to a smooth surface.

E. Except at control joints, place Gypsum Underlayment as continuous pour so that no Gypsum Underlayment is placed against cured gypsum underlayment that has obtained its initial set.

F. After placement of Gypsum Cement Underlayment, provide continuous ventilation and adequate heat to rapidly remove moisture from the area until the Gypsum Cement Underlayment is dry and acceptable for installation of floor coverings.

1. To test for dryness, tape a 24-inch x 24-inch section of plastic or high density rubber mat to the surface of the Underlayment. After 48-72 hours, if no condensation occurs, the underlayment shall be considered dry. Perform dryness test 7-10 days after pour.

3.06 TOLERANCES

A. Underlayment Surface Tolerances: Achieve the following tolerances when measured in accordance with ACI PRC-302.1:

1. Maximum Variation of Surface Flatness for Gypsum Underlayment Floors: 3/16-inch in 10 feet.

2. Surface shall be smooth and flat, free of ripples, ridges and waviness and ready for installation of specified floor covering.

3.07 PROTECTION AND REPAIR

A. Protection from Heavy Loads: During construction, place temporary wood planking over Gypsum Underlayment wherever it will be subject to heavy wheeled or concentrated loads.

B. Repair of Damaged Underlayment: Patch, repair or replace any section of Underlayment that becomes damaged or unsuitable for application of the specified floor coverings as a result of the work of this project in accordance with Underlayment manufacturer's instructions.

3.08 FIELD QUALITY CONTROL

A. Contractor Quality Control: Employ / assign quality control personnel to monitor the work of this section for conformance to the requirements of the Contract Documents and to good construction practices.

1. Contractor is solely responsible for managing and controlling the quality of the work and conformance with the requirements of the Contract Documents.

2. Contractor shall rely on his own testing, experience and skill in determining what means and methods to employ to achieve specified compressive strength and other requirements of this section and not rely solely on test data from Testing Agency.

B. Testing Agency: Owner will engage a qualified testing agency to perform periodic field quality-control testing and review of Contractor's work in accordance with Section 01 4500.

1. Tests taken are spot checks only at a given location and shall not be interpreted as representing the quality or integrity of the Gypsum Underlayment work performed.

2. Test data and reviews shall not be construed as acceptance of the work by the testing agency nor shall it relieve the Contractor of his responsibility to replace non-conforming or failed work.

C. Coordinate and schedule the work to accommodate inspections and testing as follows:

1. Testing Agency shall inspect and test the following:

a. Slump of Gypsum Underlayment as it is being pumped.

b. Cube samples from each day's pour shall be tested for compressive strength.

c. Thickness of installed Gypsum Cement Underlayment.

D. Testing agency will test field samples according to ASTM C472. Tests will be performed on at least one (1) set of three (3) molded cube samples taken from each day's pour during the Gypsum Underlayment application.

E. Thickness shall be measured at 7 to 10 random locations selected by testing agency.

F. When testing agency reports that Underlayment has not achieved slump or strength specified, remove and replace non-conforming Underlayment.

END OF SECTION

SECTION 04 7300

MANUFACTURED STONE VENEER SYSTEM

PART 1 GENERAL

1.01 RELATED DOCUMENTS

A. Drawings and general provisions of the Contract, including General Conditions, Supplementary Conditions and Divisions 00 and 01 Specification Sections, apply to work of this section.

1.02 SECTION INCLUDES

A. Exterior Manufactured Stone Veneer System.

1.03 DESIGN RESPONSIBILITY

A. Manufactured Stone Veneer System Design Responsibility: The Contract Drawings show the location of the Manufactured Stone Veneer System. The manufacturer is responsible for the technical design and details of the Manufactured Stone Veneer System as required to provide the warranted System.

1.04 REFERENCES

A. References shall be the edition current as of the date of the Contract Documents.

B. ANSI A118.4 - American National Standard Specifications for Modified Dry-Set Cement Mortar.

C. ASTM C39/C39M - Standard Test Method for Compressive Strength of Cylindrical Concrete Specimens.

D. ASTM C67/C67M - Standard Test Methods for Sampling and Testing Brick and Structural Clay Tile.

E. ASTM C144 - Standard Specification for Aggregate for Masonry Mortar.

F. ASTM C177 - Standard Test Method for Steady-State Heat Flux Measurements and Thermal Transmission Properties by Means of the Guarded-Hot-Plate Apparatus.

G. ASTM C192/C192M - Standard Practice for Making and Curing Concrete Test Specimens in the Laboratory.

H. ASTM C207 - Standard Specification for Hydrated Lime for Masonry Purposes.

I. ASTM C270 - Standard Specification for Mortar for Unit Masonry.

J. ASTM C482 - Standard Test Method for Bond Strength of Ceramic Tile to Portland Cement Paste.

K. ASTM C847 - Standard Specification for Metal Lath.

L. ASTM C932 - Standard Specification for Surface-Applied Bonding Compounds for Exterior Plastering.

M. ASTM C979/C979M - Standard Specification for Pigments for Integrally Colored Concrete.

N. ASTM C1059/C1059M - Standard Specification for Latex Agents for Bonding Fresh to Hardened Concrete.

O. ASTM C1329 - Standard Specification for Mortar Cement.

P. ASTM C1670/C1670M - Standard Specification for Adhered Manufactured Stone Masonry Veneer Units.

Q. FS UU-B-790a - Building Paper, Vegetable Fiber, (Kraft, Waterproofed, Water Repellent & Fire Resistant).

R. HUD - U.S. Department of Housing and Urban Development.

S. IBC - International Building Code.

T. ICC - International Code Council.

U. UL (DIR) - Online Certifications Directory.

1.05 SUBMITTALS

A. Refer to Section 01 3300 for submittal procedures.

B. Product Data: Submit manufacturer's product data sheet for each material, including:

1. Manufactured Stone Veneer.

2. Mortar Materials.

3. Scratch Coat Mortar Mix.

4. Mortar Bond Coat.

5. Drainage Mesh.

6. Reinforcing Lath.

7. Screw Fasteners.

8. Bonding Agent.

9. Water Repellant.

C. Submit Product Data to stone veneer Manufacturer's Field Service Representative for review and approval prior to submitting to Architect and Owner.

D. Samples: Standard sample board consisting of small-scale pieces of veneer units showing full range of textures and colors.

E. Quality Assurance / Control Submittals:

1. Qualifications:

a. Proof of manufacturer qualifications.

b. Proof of installer qualifications.

c. Regulatory Requirements: Evaluation reports.

1.06 QUALITY ASSURANCE

A. Installer Qualifications: Company experienced in installation of manufactured stone veneer of the type specified with a minimum of five (5) years of experience.

B. Required Manufactured Stone Veneer System Certifications:

1. ICC Evaluation Service – Evaluation Report ESR-1215.

2. ASTM C1670/C1670M.

3. HUD – Material Release Number 910F.

4. UL (DIR) Classification listing in Building Materials Directory: UL 546T (F8002).

C. Manufacturer's Field Inspection Services: Manufacturer's Field Service Representative shall visit the job site and inspect each element of the manufactured stone veneer system while work is in progress and after completion for conformance to manufacturer's installation requirements. Refer to Part 3 of this section for additional requirements.

1.07 MOCK-UP

A. Coordinate the mock-up with the mock-up requirements of Section 07 2700.

B. Construct mock-up for review and approval by Architect and Owner Representative(s).

C. Mock-Up Size: 8 foot long by 4 foot high sample panel at an outside corner that includes mortar, accessories and structural backup at job site in location agreed upon by all parties under conditions similar to those which will exist during actual placement and finishing.

D. Mock-up will be used to judge workmanship, substrate preparation, operation of equipment, and material application.

E. Allow ten (10) working days for review of mock-up before proceeding with work.

F. When accepted, mock-up will demonstrate minimum standard of quality required for this work. Approved mock-up may remain as part of finished work, unacceptable mock-ups shall be removed and replaced until an acceptable mock-up is provided.

G. Do not proceed with installation of manufactured stone veneer system on building until Architect, Owner Representative(s), and manufacturer's technical representative has reviewed and approved mock-up.

1.08 PRE-INSTALLATION CONFERENCE

A. Prior to start of manufactured stone veneer system installation, Contractor shall schedule a pre-installation conference at the job site to review the scope of work, project conditions, installation procedures, manufacturer's inspection, and the mock-up.

B. Persons attending pre-installation conference shall include the Contractor, manufactured stone veneer subcontractor, manufacturer's technical representative, Architect, and Owner.

1.09 DELIVERY, STORAGE AND HANDLING

A. Deliver products to site, store, and protect as recommended by manufacturer under provisions of Section 01 6000.

B. Store mortar and other moisture-sensitive materials in protected enclosures. Handle by methods which avoid exposure to moisture.

1.10 PROJECT CONDITIONS

A. Maintain materials and surrounding air temperature to minimum 40 degrees F. prior to, during, and for 48 hours after completion of work.

B. Protect materials from rain, moisture, and freezing temperatures prior to, during, and for 48 hours after completion of work.

C. Allow no construction on opposite side of wall during installation and for 48 hours after completion of work.

1.11 WARRANTY

A. Manufacturer shall warrant the Manufactured Stone Veneer System for a period of fifty (50) years and shall issue a warranty letter to the Owner at the completion of the work which states the following: “The Eldorado Stone wall veneer system installation (manufactured stone, mortar, scratch coat, self-furring galvanized metal lath, fasteners, and sheet-applied air and water barrier) on the “Port of Everett - Wine Walk Building A12”, located in “Everett, Washington”, is warranted against defects or system failure for a period of fifty (50) years”.

PART 2 PRODUCTS

2.01 MANUFACTURED STONE VENEER SYSTEM

A. Manufacturer / Product: Eldorado Stone, *Stacked Stone* is the basis of design and the standard of quality, function, performance and appearance required for this project.

1. Eldorado Stone; *Stacked Stone* (specified, basis of design).

2. Products by other manufacturers may be acceptable, subject to their ability to meet or exceed this standard and provide products conforming with the requirements of the Drawings and this Specification.

3. Substitutions: Refer to Section 01 6000 for substitution procedures and requirements. Proposed substitutions must match specified product performance and colors.

B. Manufactured Stone Veneer Units: Precast units consisting of Portland Cement, sand, lightweight aggregates, and mineral oxide pigments.

1. Physical Properties:

a. Compressive Strength: ASTM C192/C192M and ASTM C39/C39M, 5 sample average: greater than 1,800 psi.

b. Shear Bond: ASTM C482: 50 psi, minimum.

c. Freeze-Thaw Test: ASTM C67/C67M: Less than 3 percent weight loss and no disintegration.

d. Thermal Resistance: ASTM C177: 0.473 at 1.387-inches thick

e. Weight per square foot: IBC, ASTM C1670/C1670M, 15 pounds, saturated

2. Colors: _____.

3. Special Shapes: Provide special shaped as required to complete the project.

C. Sheet-Applied Air and Water Barrier System: Specified in Section 07 2719.

D. Drainage Mesh: Nominal 7/16-inch thick, polymer core of fused entangled filaments bonded to a moisture resistant filter fabric on the outer surface.

1. Manufacturer / Product: Stuc-O-Flex International, *WaterWay 11mm Rainscreen Drainage Mat* is the basis of design and the standard of quality, function, performance and appearance required for this project.

a. Stuc-O-Flex International; *WaterWay 11mm Rainscreen Drainage Mat* (specified, basis of design).

b. Products by other manufacturers may be acceptable, subject to their ability to meet or exceed this standard and provide products conforming with the requirements of the Drawings and this Specification.

c. Substitutions: Refer to Section 01 6000 for substitution procedures and requirements. Proposed substitutions must match specified product performance.

E. Reinforcing Lath: Contractor shall select one (1) of the options below.

1. Self-furring diamond expanded metal lath, 2.5 lbs. / square yard, galvanized, conform to ASTM C847; with paper back conforming to FS UU-B-790a, Type 1, Style 2, Grade D, with 60 minute paper water resistance.

2. Self-furring diamond expanded metal lath, 2.5 lbs. / square yard, galvanized, conform to ASTM C847 and a separate layer of 60 minute water-resistive paper confirming to paper back conforming to FS UU-B-790a, Type 1, Style 2, Grade D.

F. Fasteners: Fasteners shall conform to the manufactured stone veneer manufacturer requirements and to the following:

1. Framing: Corrosion resistant polymer coated galvanized steel screws, modified truss head with minimum 3/8-inch diameter head, self-drilling with Type A point (point shall not cause a hole in the sheet-applied air and water barrier system); screw shall be long enough to penetrate wood framing 1-inch minimum.

G. Mortar Materials:

1. Cement: Portland cement complying with ASTM C1329.

2. Lime: Conform to ASTM C207.

3. Sand: Conform to ASTM C144, natural or manufactured sand.

4. Color Pigment: Conform to ASTM C979/C979M, mineral oxide pigments.

5. Water: Potable.

6. Pre-Packaged Latex-Portland Cement Mortar: Conform to ANSI A118.4.

H. Mortar Mix for Jointless / Dry-Stacked Installation: Mix mortar in accordance with manufactured stone veneer manufacturer's mortar preparation instructions.

1. Polymer modified mortar complying with ANSI A118.4.

2. Mortar prepared to comply with ASTM C270. Type S mortar.

a. Add color pigment in accordance with pigment manufacturer's instructions to achieve required mortar color.

I. Bonding Agent: Exterior integral bonding agent meeting ASTM C932 or ASTM C1059/C1059M Type II.

J. Weep Screed: Galvanized sheet steel screed, 26 gauge.

1. Manufacturers / Products: Subject to their ability to conform to the requirements of the Drawings and this Specification, the following manufacturers / products may be provided:

a. Amico; *Foundation Weep Screed No. 7*.

b. Cemco; *#7 Foundation Sill Screed.*

c. ClarkDietrich; *FHA-7 Weep Sill Screed.*

d. Substitutions: Refer to Section 01 6000 for substitution procedures and requirements. Proposed substitutions must match specified product performance.

K. Water Repellent Sealer: Specified in Section 09 9000.

PART 3 EXECUTION

3.01 COORDINATION

A. Review, coordinate and accommodate work of other trades that interface with, affect or are affected by the work of this section so as to facilitate the execution of the overall Work of this project in a coordinated and efficient manner.

B. Coordinate installation of sheet-applied air and water barrier system and self-draining membrane with adjacent siding installation.

3.02 EXAMINATION

A. Examine substrates upon which work will be installed for conformance with stone veneer manufacturer's requirements.

B. Inspect sheet-applied air and water barrier system and flashing installation for tears, damage or improper installation, do not proceed with installation until repairs have been accomplished.

C. Coordinate with responsible entity to perform corrective work on unsatisfactory substrates; do not start work until substrate is acceptable.

D. Commencement of work by installer is acceptance of substrate.

3.03 PREPARATION

A. Protection: Protect adjacent work from contact with mortar.

B. Surface Preparation: Prepare substrate in accordance with manufacturer's installation instructions for the type of substrate being covered.

3.04 INSTALLATION – DRAINAGE MESH (EXTERIOR APPLICATIONS)

A. Schedule installation of self-draining membrane immediately prior to application of reinforcing lath so that it is not exposed to the weather.

B. Install self-draining membrane over sheet-applied air and water barrier system in conformance with manufacturer's installation instructions, weatherlap and seal edges to shed water to exterior face.

1. Face the integral filter fabric towards the exterior.

3.05 INSTALLATION – REINFORCING LATH (EXTERIOR APPLICATIONS)

A. Mark layout of metal wall framing on wall with chalk line to allow accurate placement of screw fasteners into framing without making empty holes in sheet-applied air and water barrier system.

B. Install weep screed continuous at bottom of manufactured stone veneer system lath / mortar coat.

C. Install self-furring metal lath in accordance with manufactured stone veneer manufacturer's installation instructions.

1. Face the lath paper towards the self-draining membrane's filter fabric.

2. If lath and paper are two (2) separate materials, install paper first over the self-draining membrane's filter fabric. Weather-lap the paper a minimum of 4-inches at horizontal joints and 6-inches at vertical joints.

D. Secure lath to metal framing securely with proper length screw fasteners at spacing / layout required by manufactured stone veneer manufacturer.

1. Screws shall penetrate wood framing 1-inch minimum.

2. Screws shall not wind up fibers in sheet-applied air and water barrier system and cause holes.

3. Fill any holes in sheet-applied air and water barrier system resulting from screw missing framing member or other causes with sealant airtight and watertight as recommended by sheet-applied air and water barrier system manufacturer.

3.06 INSTALLATION – MORTAR

A. Use the mortar materials and mix recommended by manufactured stone veneer manufacturer for installation on this project.

B. Thoroughly mix mortar ingredients in a powered mortar mixing machine in quantities needed for immediate use.

C. Apply scratch coat mortar to lath in accordance with stone veneer manufacturer's installation instructions; work mortar into lath to fully encase front and back of lath in mortar.

3.07 INSTALLATION – MANUFACTURED STONE VENEER

A. Install stone veneer in accordance with manufacturer's installation instructions for installation; appearance shall match the approved mock-up.

1. Installation method shall be for a Jointless / Dry-Stacked installation.

B. Plan work to minimize job site cutting; avoid small cut pieces and cuts that stand out or detract from the overall appearance of the veneer installation.

1. Perform necessary cutting required to accommodate layout, openings, work of other trades, etc. with proper tools to provide uniform edges; take care to prevent breaking unit corners or edges.

C. Installed stone veneer shall have a completely random appearance free from any discernable repeat layup patterns, color patterns, color shifts between batches, etc.

1. Consult with manufacturer on how to avoid these problems and to achieve the desired random stone appearance required.

D. Take precautions to avoid excess mortar on exposed faces and edges of stone veneer.

1. Remove excess mortar; do not allow mortar to set up on exposed face and edges of units as recommended by manufacturer (do not acid etch stone veneer).

3.08 CLEANING

A. Remove unused construction materials, including mortar and cement that is in the soil, from the site and building; remove protective coverings from adjacent work.

B. Cleaning Stone Veneer: Clean as recommended by manufacturer.

1. Wash with soft bristle brush and water / granulated detergent solution.

2. Rinse immediately with clean water.

C. Removing Efflorescence: Remove as recommended by manufacturer.

1. Allow veneer to dry thoroughly.

2. Scrub with soft bristle brush and clean water.

3. Rinse immediately with clean water; allow to dry.

4. If efflorescence is still visible, repeat above procedure using a solution of 1 part household vinegar and 5 parts water.

5. Rinse immediately with clean water.

3.09 APPLICATION – WATER REPELLENT SEALER

A. Apply per manufacturer's recommended application method for number of coats and application method for specific substrate.

3.10 FIELD QUALITY CONTROL

A. Contractor Quality Control: Employ / assign quality control personnel to monitor the work of this section for conformance to the requirements of the Contract Documents and to good construction practices.

1. Contractor is solely responsible for managing and controlling the quality of the work and conformance with the requirements of the Contract Documents.

B. Manufacturer's Field Inspection Services: Manufacturer's Field Service Representative shall visit the job site and inspect each element of the manufactured stone veneer system while work is in progress and after completion for conformance to manufacturer's installation requirements:

1. Review and approval of submittals.

2. Inspect and approve mock-up.

3. Inspect and approve wall substrate prior to installation of sheet-applied air and water barrier system.

4. Inspect and approve sheet-applied air and water barrier system, self-draining membrane and flashing installation prior to installation of reinforcing lath.

5. Inspect and approve reinforcing lath installation prior to application of mortar.

6. Inspect and approve mortar application prior to installation of manufactured stone veneer.

7. Inspect and approve manufactured stone veneer installation.

8. Make any corrections required by Manufacturer's Field Service Representative and conform with any recommendations.

END OF SECTION

SECTION 05 1200

STRUCTURAL STEEL

PART 1 GENERAL

1.01 RELATED DOCUMENTS

A. Drawings and general provisions of the Contract, including General Conditions, Supplementary Conditions and Divisions 00 and 01 Specification Sections, apply to work of this section.

1.02 SECTION INCLUDES

A. Building Structural Steel.

1.03 REFERENCES

A. References shall be the edition current as of the date of the Contract Documents.

B. AISC (MAN) - Steel Construction Manual.

C. AISC 303 - Code of Standard Practice for Steel Buildings and Bridges.

D. AISC 325 - Steel Construction Manual.

E. ASTM A123/A123M - Standard Specification for Zinc (Hot-Dip Galvanized) Coatings on Iron and Steel Products.

F. ASTM A153/A153M - Standard Specification for Zinc Coating (Hot-Dip) on Iron and Steel Hardware.

G. AWS A2.4 - Standard Symbols for Welding, Brazing, and Nondestructive Examination.

H. AWS D1.1/D1.1M - Structural Welding Code - Steel.

I. IBC - International Building Code.

J. SSPC-PA 1 - Shop, Field, and Maintenance Coating of Metals.

K. SSPC-Paint 20 - Zinc-Rich Coating (Type I - Inorganic, and Type II - Organic).

L. SSPC-Paint 29 - Coating Standard No. 29 Zinc-Pigmented Primer, Performance-Based.

M. SSPC-SP 3 - Power Tool Cleaning.

N. WABO - Washington Association of Building Officials.

1.04 SUBMITTALS

A. Refer to Section 01 3300 for submittal procedures.

B. Shop Drawings: Provide shop drawings prepared by an experienced professional steel detailer.

1. Show fabrication of structural steel components.

2. Calculate and resolve dimensions related to structural steel work and coordinate with work of other trades.

3. Indicate profiles, sizes, spacing, and locations of structural members, openings, attachments, and fasteners.

4. Connections:

a. Indicate type, size, grade and length of bolts; distinguish between shop and field bolts. Clearly indicate pre-tensioned and slip critical high-strength bolted connections.

b. Indicate welded connections with AWS A2.4 welding symbols. Indicate net weld lengths.

5. Indicate cambers and loads.

6. Include erection drawings, elevations, and details.

a. Indicate erection connections and accessories required.

C. Placement and Template Drawings: Submit template and placement drawings for location and placement of connections and anchorages.

D. Welder Certifications: Make available to Inspection Agency for review.

E. Certification / Verification:

1. Mill Test Reports and / or Verification: Certifications by manufacturers indicating product compliance with project requirements for the following:

a. Structural steel including chemical and physical properties.

2. Reports shall identify test dates, project name project location and name of steel fabricator along with steel member identification marks.

1.05 QUALITY ASSURANCE

A. Detailer Qualifications: Detailer shall have a minimum of five (5) years of experience on similar projects of equal or larger complexity and scope.

B. Fabricator Qualifications: Steel fabrications shall be performed by a Fabricator certified by the American Institute of Steel Construction, Category Standard, or the Fabricator shall have a minimum of five (5) years of experience in the fabrication of structural steel on similar projects of equal or larger complexity and scope. Provide history upon request.

C. Fabricate structural steel members in accordance with AISC 325 and AISC 303.

1. Comply with Section 10 of AISC 303 for architecturally exposed structural steel.

D. Erector Qualifications: Erector shall be certified by the American Institute of Steel Construction (AISC (MAN)), Category CSE, or the Erector shall have a minimum of five (5) years of experience in erecting structural steel on similar projects of equal or larger complexity and scope. Provide history upon request.

E. Welders: Qualified within the previous 12 months for type of welding required for this project in accordance with AWS D1.1/D1.1M and WABO certified as required by local Building Official having jurisdiction on this project.

1.06 FIELD MEASUREMENTS

A. Verify that field measurements and conditions are as shown on Drawings, shop drawings, or as instructed by product manufacturer.

PART 2 PRODUCTS

2.01 MATERIALS

A. Structural Steel Members: As specified in the Structural General Notes.

B. Structural Tubing: As specified in the Structural General Notes.

C. Steel Hardware (Bolts, Anchor Bolts, Nuts, Washers, Shear Studs): As specified in the Structural General Notes.

1. Provide hot dip galvanized finish on steel hardware in accordance with ASTM A153/A153M when used on galvanized structural steel members.

D. Miscellaneous Structural Items and Accessories: As specified in the Structural General Notes.

E. Non-Shrink Grout: As specified in the Structural General Notes.

F. Welding Materials: As specified in the Structural General Notes.

G. Shop and Touch-Up Primer: SSPC-Paint 20 or SSPC-Paint 29, zinc rich primer.

H. Touch-Up Primer for Galvanized Surfaces: Zinc dust paint complying with SSPC-Paint 20; match color of galvanizing.

2.02 FABRICATION

A. Coordinate and confirm field dimensions and conditions on site prior to shop fabrication.

B. Shop fabricate to greatest extent possible.

C. Fabricate structural steel members in accordance with AISC 325 and AISC 303.

1. Comply with Section 10 of AISC 303 for architecturally exposed structural steel (AESS).

2. Camber steel members as indicated on Drawings. Fabricate beams with rolling camber up.

D. Continuously seal joined members exposed to weather by continuous welds. Grind welds exposed to view smooth.

E. Fabricate connections for bolt, nut, and washer connectors.

F. Welding shall conform to Structural Welding Code AWS D1.1/D1.1M.

2.03 SHOP PRIME FINISHES

A. Interior Structural Steel: Shop prime fabricated steel members with primer specified in accordance with SSPC-PA 1.

1. Concealed Condition: Shop prime fabricated steel members with primer specified.

a. Prepare surfaces to be finished in accordance with SSPC-SP 3, Power Tool Cleaning.

2. Structural Steel Exposed to View: Shop prime.

a. Prepare surfaces to be finished in accordance with SSPC-SP 3, Power Tool Cleaning.

b. Field Paint: Refer to Section 09 9000.

3. Surface preparation and shop priming shall be accomplished in dry, temperature-controlled environment conforming to primer manufacturer's application requirements.

B. Exterior Galvanized Structural Steel:

1. Structural Steel Members that are on the building exterior, exposed to outdoor atmosphere or so indicated on the Drawings shall be hot-dip galvanized to comply with ASTM A123/A123M. Provide minimum 2.0 oz / sq ft galvanized coating.

2. Straighten any steel members that becomes distorted during galvanizing without damaging the galvanized coating.

2.04 SOURCE QUALITY CONTROL

A. Owner will engage an independent testing and inspection agency to perform shop inspections and test and prepare test reports.

1. Special inspections for shop fabrications of this section are waived where fabrication is performed on the premises of a fabricator registered and approved in accordance with IBC Section 1704.2; provide documentation and approval from Building Official having jurisdiction.

B. Provide testing agency with access to places where structural steel work is being fabricated to allow required inspections and testing.

C. Correct deficiencies or remove and replace structural steel that inspections and test reports indicate do not comply with specified requirements.

D. Non-conforming work will be reinspected and tested for compliance at Contractor's expense.

E. Schedule of Required Inspections and Tests: Refer to Structural Drawings for quality assurance and special inspection requirements for shop fabrications.

1. Testing agency shall confirm current qualifications of each shop welder working on this project.

PART 3 EXECUTION

3.01 COORDINATION

A. Review, coordinate and accommodate work of other trades that interface with, affect or are affected by the work of this section so as to facilitate the execution of the overall Work of this project in a coordinated and efficient manner.

B. Coordinate the installation of embedded structural items with Section 03 3000 and Section 03 3001.

3.02 EXAMINATION

A. Verify that dimensions and conditions are appropriate for erection of structural steel and that the work may properly proceed.

B. Beginning installation indicates erector's acceptance of dimensions and conditions.

3.03 PREPARATION

A. Provide temporary shores, guys, braces and other supports during erection to keep structural steel secure, plumb and in alignment against temporary construction loads and loads equal in intensity to design loads.

B. Remove temporary supports only after permanent structural members, braces, shear walls, diaphragms and brace frames are in place and properly connected.

3.04 ERECTION

A. Erect structural steel accurately in locations and to elevations required in compliance with the AISC (MAN) requirements specified in the Structural General Notes.

B. Allow for erection loads and provide sufficient temporary bracing to maintain structure in safe condition, plumb, and in true alignment until completion of erection and installation of permanent bracing.

C. Field weld components as indicated on Drawings in conformance with AWS D1.1/D1.1M.

D. Install and tighten bolted connections as indicated on Drawings.

E. Do not field cut or alter structural members without approval of Architect.

F. After erection, prime welds, abrasions, and surfaces not shop primed, except surfaces to be in contact with concrete.

G. Prime Paint Repair: After erection, clean and prepare steel surfaces where shop primer has been damaged, is missing and at welds in accordance with SSPC-SP 3. Touch up bare steel with specified prime paint in accordance with SSPC-PA 1, except surfaces to be in contact with concrete.

H. Grout solidly between bearing plates and bearing surfaces, complying with manufacturer's instructions for non-shrink grout. Trowel grouted surfaces smooth, splaying neatly to 45 degrees.

I. Corrective Measures:

1. Any errors in locations or inaccuracies in the setting of anchor bolts, base plates, bearing plates or other items of attachment or support for steel work shall be reported to the Structural Engineer and shall be corrected in a manner subject to the approval of the Structural Engineer.

2. Any misfits due to errors in fabrication shall be reported immediately to the Structural Engineer along with proposed method of correction of same and Structural Engineer approval obtained before proceeding with corrective measures.

3. Bolted or welded connections, joints or fastenings which are classified as defective in the opinion of the Structural Engineer shall be corrected by the Contractor in a manner subject to the Structural Engineer approval.

J. Galvanized Members: Clean and prepare bare steel surfaces where galvanizing coating has been damaged, is missing and at field welds in accordance with SSPC-SP 3 and paint damaged galvanized coating using the specified zinc-rich paint matching color of galvanizing.

3.05 ERECTION TOLERANCES

A. Maintain erection tolerances of structural steel within AISC requirements specified in the Structural General Notes and the following:

1. Maximum Variation from Plumb: 1/4-inch per story, non-cumulative.

2. Maximum Offset from True Alignment: 1/4-inch.

3.06 PROTECTION

A. Surfaces Exposed to View: Protect primed and galvanized surfaces of structural steel exposed to view from damage during shipping, handling and erection.

3.07 FIELD QUALITY CONTROL

A. Contractor Quality Control: Employ / assign quality control personnel to monitor the work of this section for conformance to the requirements of the Contract Documents and to good construction practices.

1. Contractor is solely responsible for managing and controlling the quality of the work and conformance with the requirements of the Contract Documents.

B. Owner will engage an independent testing and inspection agency to perform field inspections and tests and prepare test reports, in accordance with Section 01 4500 and the testing requirements noted on the Structural Drawings.

1. Coordinate inspection of field connections by independent testing company when connections are accessible and prior to cover.

2. Provide testing agency with access to the work to allow required inspections and testing.

3. Correct deficiencies or remove and replace any work that inspections and test reports indicate do not comply with specified requirements.

C. Non-conforming work will be reinspected and tested for compliance at Contractor's expense.

D. Schedule of Required Inspections and Tests: Refer to Structural Drawings for quality assurance and special inspection requirements for field fabrications.

1. Testing agency shall confirm current qualifications of each field welder working on this project.

END OF SECTION

SECTION 05 5000

METAL FABRICATIONS

PART 1 GENERAL

1.01 RELATED DOCUMENTS

A. Drawings and general provisions of the Contract, including General Conditions, Supplementary Conditions and Divisions 00 and 01 Specification Sections, apply to work of this section.

1.02 SECTION INCLUDES

A. Custom Exterior Canopy Roof Structures.

B. Steel Ladders.

C. Elevator Pit Sump Grating.

D. Custom Interior Stairways and Landings.

E. Angles for Elevator Door Sills.

F. Other Miscellaneous Metal Fabrications.

1.03 REFERENCES

A. References shall be the edition current as of the date of the Contract Documents.

B. ANSI A14.3 - American National Standard for Ladders -- Fixed -- Safety Requirements.

C. ASTM A36/A36M - Standard Specification for Carbon Structural Steel.

D. ASTM A123/A123M - Standard Specification for Zinc (Hot-Dip Galvanized) Coatings on Iron and Steel Products.

E. ASTM A153/A153M - Standard Specification for Zinc Coating (Hot-Dip) on Iron and Steel Hardware.

F. ASTM A283/A283M - Standard Specification for Low and Intermediate Tensile Strength Carbon Steel Plates.

G. ASTM A1008/A1008M - Standard Specification for Steel, Sheet, Cold-Rolled, Carbon, Structural, High-Strength Low-Alloy, High-Strength Low-Alloy with Improved Formability, Required Hardness, Solution Hardened, and Bake Hardenable.

H. ASTM F3125/F3125M - Standard Specification for High Strength Structural Bolts and Assemblies, Steel and Alloy Steel, Heat Treated, Inch Dimensions 120 ksi and 150 ksi Minimum Tensile Strength, and Metric Dimensions 830 MPa and 1040 MPa Minimum Tensile Strength.

I. AWS D1.1/D1.1M - Structural Welding Code - Steel.

J. AWS D1.4/D1.4M - Structural Welding Code - Steel Reinforcing Bars.

K. SSPC-PA 1 - Shop, Field, and Maintenance Coating of Metals.

L. SSPC-Paint 20 - Zinc-Rich Coating (Type I - Inorganic, and Type II - Organic).

M. SSPC-Paint 29 - Coating Standard No. 29 Zinc-Pigmented Primer, Performance-Based.

N. SSPC-SP 3 - Power Tool Cleaning.

O. SSPC-SP 6 - Commercial Blast Cleaning.

P. WABO - Washington Association of Building Officials.

1.04 SUBMITTALS

A. Refer to Section 01 3300 for submittal procedures.

B. Shop Drawings: Submit shop drawings prepared by a professional steel detailer showing each metal fabrication; indicate profiles, sizes, connection attachments, reinforcing, anchorage, size and type of fasteners and accessories. Include erection drawings, elevations and details where applicable.

1.05 QUALITY ASSURANCE

A. Installer Qualifications: Experienced in performing work of this section with a minimum of five (5) years of documented experience in the installation of work similar to that required for this project.

B. Welders: Qualified within the previous twelve (12) months for type of welding required for this project in accordance with AWS D1.1/D1.1M and AWS D1.4/D1.4M and WABO certified as required by local Building Official having jurisdiction on this project.

PART 2 PRODUCTS

2.01 MATERIALS

A. Steel Sheet: ASTM A1008/A1008M.

B. Solid Steel Bars, Plates and Shapes: ASTM A36/A36M.

C. Plates: ASTM A283/A283M.

D. Steel Grate – Elevator Pit Sump: Pressure locked steel grating, 3/4-inch wide by 1/8-inch thick bearing bars at 13/16-inches on center, with crossbars at 4-inches on center; McNichols *Heavy Duty Welded Series GCM-5-75-A* or similar.

E. Bolts, Nuts, and Washers: ASTM F3125/F3125M galvanized to ASTM A153/A153M for galvanized components.

F. Welding Materials: AWS D1.1/D1.1M; type required for materials being welded.

G. Shop and Touch-Up Primer: SSPC-Paint 20 or SSPC-Paint 29, zinc rich primer.

H. Touch-Up Primer for Galvanized Surfaces: Zinc dust paint complying with SSPC-Paint 20; match color of galvanizing.

2.02 FABRICATION

A. Coordinate and confirm field dimensions and conditions prior to fabrication.

B. Fit and shop assemble items in largest practical sections, for delivery to site.

C. Fabricate items with joints tightly fitted and secured.

D. Grind exposed joints flush and smooth with adjacent finish surface. Make exposed joints butt tight, flush, and hairline. Ease exposed edges to small uniform radius.

E. Exposed Mechanical Fastenings: Flush countersunk screws or bolts; unobtrusively located; consistent with design of component, except where specifically noted otherwise.

F. Supply components required for anchorage of fabrications. Fabricate anchors and related components of same material and finish as fabrication, except where specifically noted otherwise.

2.03 FABRICATED ITEMS

A. Custom Exterior Roof Canopy Structure: Fabricate welded steel canopies using steel shapes and to configuration shown on the Drawings.

1. Fabricate as an exposed to view architectural steel fabrication.

2. Field Connections: Fabricate for bolted connections, field welding not allowed.

3. Finish: Hot dipped galvanized after fabrication in sections and field painted by Section 09 9000.

B. Steel Ladders: Welded steel construction, configuration as shown on Drawings and as required to accommodate installation conditions, fabricated in compliance with ANSI A14.3.

1. Side Rails: 2-1/2-inch x 3/8-inch steel members spaced 20-inches apart, or as shown on Drawings.

2. Rungs: One-inch diameter solid round bar spaced 12-inches on center welded to side rails.

    a. Space rungs 7-inches minimum, clear from wall surface.

    b. Align top rung flush with floor level.

3. Floor Mounting Brackets: 2-1/2-inch x 2-1/2-inch x 1/4-inch steel angle welded to side rails, provide hole for 1/2-inch anchor bolt connection to floor structure.

4. Wall Mounting Brackets: 2-1/2-inch x 3/8-inch steel members fabricated to shape as required to accommodate mounting conditions, locate brackets maximum 4 feet on center, weld to side rails; provide hole for 1/2-inch anchor bolt connection to building structure.

5. Elevator pit access ladder shall extend from bottom of elevator pit to 4 feet above floor level.

6. Finish:

    a. Interior Ladders: Shop prime paint.

C. Steel Grating for Elevator Pit Sump: Welded steel grating, 3/4-inch wide by 1/8-inch thick bearing bars at 13/16-inches on center, with crossbars at 4-inches on center; McNichols *Heavy Duty Welded Series GCM-5-75-A* or similar.

1. Provide steel angle perimeter support with welded corners on four sides of sump as shown on Drawings.

2. Finish: Shop prime paint.

D. Custom Stairways and Landings: Fabricate welded steel stair and landing assembly using steel shapes and to configuration shown on the Drawings. Stair / landing assembly is an exposed to view architectural steel fabrication.

1. Steel: Hot-rolled steel descaled and free of any rust, dents, scratches or damage; obtain steel from supplier that protects the steel faces from any scratches or damage, steel faces shall be virgin and undamaged.

    a. Surfaces of steel shapes in the stairs and landing are exposed to view finish item; protect exposed surfaces from rusting and damage during fabrication.

2. Welds: Use welding equipment / technique that provides a clean, neat, weld bead of consistent width and appearance, with low profile and edges feathered into adjacent metal, no splatter, no voids, and a smooth surface finish.

a. Provide continuous welds the full length and circumference of pieces being connected, no stitch welds where exposed to view.

b. Weld shall fill joint completely free of any voids or holes.

c. Grind welds flush and smooth; do not leave grinder marks or visible scratches on surface of steel.

d. Limit grinding to the width of the weld, do not grind more than 1/2-inch onto adjacent steel

3. Stair Risers: Fabricate steel sheet as shown on Drawings.

a. Fabricate each stair riser in one (1) piece without joints.

b. Bend to radius that does not result in crazing or cracking on outside face of corner.

4. Stair Treads and Landings: Glue-Laminated Timbers as specified in Section 06 1800.

5. Stair Finish: Field painted as specified in Section 09 9000.

E. Angles For Elevator Door Sills: As required for support of elevator doors and sills in hoistway; prime paint finish.

F. Other Miscellaneous Fabricated Steel Items Shown On The Drawings: Fabricate as shown.

2.04 FINISHES – STEEL

A. Prime Paint:

1. Prepare surfaces to be primed in accordance with paint manufacturer's recommendations and SSPC-SP 6.

2. Clean surfaces of rust, scale, grease, and foreign matter prior to finishing.

3. Apply one (1) coat of prime paint in conformance with manufacturer's installation instructions and recommended application rates.

B. Galvanizing: Galvanize after fabrication to ASTM A123/A123M. Provide minimum 2.0 oz / sq ft galvanized coating.

1. Hot-dip galvanize items on building exterior, exposed to exterior atmosphere or so indicated in this section or on the Drawings.

C. Field Painted Finish: Specified in Section 09 9000.

2.05 FABRICATION TOLERANCES

A. Squareness: 1/8-inch maximum difference in diagonal measurements.

B. Maximum Offset Between Faces: No misalignment allowed, fabricate flush.

C. Maximum Misalignment of Adjacent Members: 1/16-inch.

D. Maximum Bow: 1/16-inch in 48-inches.

E. Maximum Deviation From Plane: 1/16-inch in 48-inches.

PART 3 EXECUTION

3.01 COORDINATION

A. Review, coordinate and accommodate work of other trades that interface with, affect or are affected by the work of this section so as to facilitate the execution of the overall Work of this project in a coordinated and efficient manner.

B. Coordinate the installation of the guardrails and handrails specified in Section 05 5200.

3.02 EXAMINATION

A. Verify that field conditions are acceptable and are ready to receive work.

B. Beginning installation indicates installer's acceptance of conditions.

3.03 PREPARATION

A. Clean and strip primed steel items to bare metal where site welding is required.

B. Supply setting templates to the appropriate entities for steel items required to be cast into concrete or embedded in masonry.

3.04 INSTALLATION – GENERAL

A. Install items plumb and level, accurately fitted, free from distortion or defects.

B. Provide for erection loads, and for sufficient temporary bracing to maintain true alignment until completion of erection and installation of permanent attachments.

C. Field weld components indicated on shop drawings.

D. Perform field welding in accordance with AWS D1.1/D1.1M.

E. Obtain approval prior to site cutting or making adjustments not scheduled.

F. Prime Paint Repair: After erection, clean and prepare steel surfaces where shop primer has been damaged, is missing and at welds in accordance with SSPC-SP 3 and touch up bare steel with specified prime paint in accordance with SSPC-PA 1.

G. Galvanized Members: Clean and prepare bare steel surfaces where galvanizing coating has been damaged, is missing and at field welds in accordance with SSPC-SP 3 and paint damaged galvanized coating using the specified zinc-rich paint matching color of galvanizing.

3.05 ERECTION TOLERANCES

A. Maximum Variation From Plumb: 1/4-inch per story, non-cumulative.

B. Maximum Offset From True Alignment: 1/4-inch.

C. Maximum Out-of-Position: 1/4-inch.

3.06 PROTECTION

A. Protect prime painted and galvanized surfaces of fabrications from damage during shipping, handling and erection.

3.07 FIELD QUALITY CONTROL

A. Contractor Quality Control: Employ / assign quality control personnel to monitor the work of this section for conformance to the requirements of the Contract Documents and to good construction practices.

1. Contractor is solely responsible for managing and controlling the quality of the work and conformance with the requirements of the Contract Documents.

END OF SECTION

SECTION 05 5200

METAL RAILINGS

PART 1 GENERAL

1.01 RELATED DOCUMENTS

A. Drawings and general provisions of the Contract, including General Conditions, Supplementary Conditions and Divisions 00 and 01 Specification Sections, apply to work of this section.

1.02 SECTION INCLUDES

1.03 PERFORMANCE REQUIREMENTS

A. Conform to handrail and guardrail requirements of the IBC.

B. Conform to the structural requirements of the IBC 1607.8 and ASCE 7:

1. Linear Load: Handrails and Guardrails shall resist a linear load of 50 pounds per linear foot in accordance with Section 4.5.1 of ASCE 7 without permanent deflection or failure of fabrication.

2. Concentrated Load: Handrails and Guardrails shall resist a concentrated load of 200 pounds in accordance with Section 4.5.1 of ASCE 7 without permanent deflection or failure of fabrication.

C. Accessibility Requirements:

1. Conform to ICC A117.1.

2. ADA Accessibility Tolerances: Comply with ADA Standards tolerances shown on the Drawings.

1.04 REFERENCES

A. References shall be the edition current as of the date of the Contract Documents.

B. ADA Standards - 2010 ADA Standards for Accessible Design.

C. ASCE 7 - Minimum Design Loads and Associated Criteria for Buildings and Other Structures.

D. AWS D1.1/D1.1M - Structural Welding Code - Steel.

E. AWS D1.4/D1.4M - Structural Welding Code - Steel Reinforcing Bars.

F. IBC - International Building Code.

G. ICC A117.1 - Accessible and Usable Buildings and Facilities.

H. WABO - Washington Association of Building Officials.

1.05 SUBMITTALS

A. Refer to Section 01 3300 for submittal procedures.

B. Product Data: Submit paint manufacturer's product literature and specifications.

C. Shop Drawings: Indicate materials, shapes, sizes, connection attachments, anchorage, size and type of fasteners, and accessories.

1. Indicate compliance with the Performance Requirements specified herein for each assembly.

1.06 QUALITY ASSURANCE

A. Installer Qualifications: Experienced in performing work of this section with a minimum of five (5) years of documented experience in the installation of work similar to that required for this project.

B. Welders: Qualified within the previous twelve (12) months for type of welding required for this project in accordance with AWS D1.1/D1.1M and AWS D1.4/D1.4M and WABO certified as required by local Building Official having jurisdiction on this project.

PART 2 PRODUCTS

2.01 MATERIALS

A. Fittings: Forged steel elbows, T-shapes, wall brackets, escutcheons; same material and outside diameter as pipe / tubing.

B. Exposed Fasteners: Flush countersunk screws or bolts; consistent with design of railing.

PART 3 EXECUTION

3.01 COORDINATION

A. Review, coordinate and accommodate work of other trades that interface with, affect or are affected by the work of this section so as to facilitate the execution of the overall Work of this project in a coordinated and efficient manner.

3.02 EXAMINATION

A. Verify that field conditions are acceptable and are ready to receive work.

3.03 INSTALLATION

A. Install components plumb, straight and level (as applicable), accurately fitted, free from distortion or defects.

B. Anchor railing or railing support system securely to structure to resist code required loads.

C. Conceal bolts and screws whenever possible. Where not concealed, use flush countersunk fasteners.

3.04 INSTALLATION TOLERANCES

A. Accessibility Tolerances: Comply with applicable ADA Standards and ICC A117.1 tolerances shown on the Drawings.

3.05 PROTECTION

A. Protect handrails from damage, repair any scratches resulting from shipping, handling, construction work or traffic to match adjacent finish and so that repaired area is invisible.

3.06 WORKMANSHIP

A. Metal railings installation shall be installed using the best workmanship, including but not limited to the following:

1. Members aligned for proper fit and appearance.

2. Railing assemblies installed plumb, level, straight and true.

3. Neat welds free of voids or roughness.

4. Welds ground smooth.

B. Any part of the metal railings installed with improper or poor workmanship shall be removed and replaced at Contractor's expense.

3.07 FIELD QUALITY CONTROL

A. Contractor Quality Control: Employ / assign quality control personnel to monitor the work of this section for conformance to the requirements of the Contract Documents and to good construction practices.

1. Contractor is solely responsible for managing and controlling the quality of the work and conformance with the requirements of the Contract Documents.

END OF SECTION

SECTION 05 5500

STAIR NOSINGS

PART 1 GENERAL

1.01 RELATED DOCUMENTS

A. Drawings and general provisions of the Contract, including General Conditions, Supplementary Conditions and Divisions 00 and 01 Specification Sections, apply to work of this section.

1.02 SECTION INCLUDES

A. Stair Nosings at Glue-Laminated Stair Treads.

1.03 SUBMITTALS

A. Refer to Section 01 3300 for submittal procedures.

B. Product Data: Submit manufacturer's technical data and catalog cut sheets.

1.04 QUALITY ASSURACE

A. Manufacturer:

1. Obtain stair nosing assemblies through one (1) source from a single manufacturer.

2. Manufacturer shall have a minimum of ten (10) years of experience in the fabrication of stair nosing systems.

1.05 DELIVERY, STORAGE AND HANDLING

A. Deliver stair nosing assemblies to job site in new, clean, unopened crates of sufficient size and strength to protect materials during transit.

B. Store components in original containers in a clean, dry location.

PART 2 PRODUCTS

2.01 MANUFACTURERS

A. Manufacturers: Subject to their ability to provide products conforming with the requirements of this section and as shown on Drawings, the following manufacturers may provide products:

1. American Safety Tread.

2. Balco, Inc.

3. Grating Pacific LLC. (specified, basis of design).

4. Nystrom.

5. Wooster Products, Inc.

6. Substitutions: Refer to Section 01 6000 for substitution procedures and requirements.

2.02 STAIR NOSINGS

A. Stair Nosings at Glue-Laminated Stair Treads:

1. Manufacturer / Product: Grating Pacific LLC, *Type C-20* is the basis of design and the standard of quality, function, performance and appearance required for this project.

   a. Grating Pacific LLC; *Type C-20* (specified, basis of design).

   b. Products by the other manufacturers listed in this specification section may be acceptable, subject to their ability to meet or exceed this standard and provide products conforming with the requirements of the Drawings and this Specification.

   c. Substitutions: Refer to Section 01 6000 for substitution procedures and requirements. Proposed substitutions must match specified product performance and finish.

2. Material: Cast Iron, Class 35, tread plate.

3. Nosing Type: 3-inch wide nosing with no leg.

2.03 FABRICATION

A. Fabricate stair nosing assemblies to length required for single nosing on each stair tread without joints.

B. Drill holes at uniform spacing for countersunk screw fasteners.

2.04 FINISHES

A. Finish: Natural cast Iron, no finish required.

PART 3 EXECUTION

3.01 COORDINATION

A. Review, coordinate and accommodate work of other trades that interface with, affect or are affected by the work of this section so as to facilitate the execution of the overall Work of this project in a coordinated and efficient manner.

B. Coordinate installation of stair nosings in glue-laminated wood stair treads with Section 06 1800.

3.02 EXAMINATION

A. Installer shall examine stair treads and conditions under which work is to be performed.

B. Do not proceed with installation until any unsatisfactory conditions have been corrected.

C. Start of installation indicated installer's acceptance of stair treads and conditions.

3.03 INSTALLATION – STAIR NOSINGS AT GLUE-LAMINATED STAIR TREADS

A. Before installation of the stair nosing, clean off any protective coating on the nosing.

B. Install stair nosings in accordance with the governing regulations, the industry standards applicable to the work, and the manufacturer's written installation instructions.

C. Use templates to accurately machine-cut recess into the nose of glue-laminated wood stair tread to fit the profile of the stair nosing and support it fully.

1. Top of nosing shall sit flush with top of wood tread.

2. Nosing shall sit level across its width (front to back).

3. Joints between nosing and wood shall be tight and free of any open gap.

D. Install nosings full width of stair tread in a single piece without joints.

E. Attach nosings securely to stair treads with wood screws, predrill pilot holes to receive screws.

3.04 CLEANING

A. Clean exposed surfaces as recommended by the manufacturer.

3.05 PROTECTION

A. Protect stair nosings from damage until Owner acceptance of project.

3.06 FIELD QUALITY CONTROL

A. Contractor Quality Control: Employ / assign quality control personnel to monitor the work of this section for conformance to the requirements of the Contract Documents and to good construction practices.

1. Contractor is solely responsible for managing and controlling the quality of the work and conformance with the requirements of the Contract Documents.

END OF SECTION

SECTION 06 1000

ROUGH CARPENTRY

PART 1 GENERAL

1.01 RELATED DOCUMENTS

A. Drawings and general provisions of the Contract, including General Conditions, Supplementary Conditions and Divisions 00 and 01 Specification Sections, apply to work of this section.

1.02 SECTION INCLUDES

A. Rough Carpentry.

B. Temporary Weather Protection for Roof Sheathing.

1.03 REFERENCES

A. References shall be the edition current as of the date of the Contract Documents.

B. APA - The Engineered Wood Association.

C. AWPA - American Wood Protection Association.

D. AWPA U1 - Use Category System: User Specification for Treated Wood.

E. IBC - International Building Code.

F. ICC - International Code Council.

G. PS 1 - Structural Plywood.

H. PS 20 - American Softwood Lumber Standard.

I. WCLIB (GR) - Standard Grading Rules for West Coast Lumber No. 17.

J. WWPA G-5 - Western Lumber Grading Rules.

1.04 QUALITY ASSURANCE

A. Lumber: Comply with PS 20 and approved grading rules and inspection agencies.

1. Acceptable Lumber Inspection Agencies: WCLIB (GR) and WWPA G-5.

B. Framing Carpenters: Only skilled, journeyman carpenters, that have successfully completed a four (4) year, state approved apprenticeship program for wood carpentry construction (or equivalent documented experience), and apprentice carpenters working under the direct supervision of an experienced journeyman carpenter, are approved to do the carpentry work for this project.

1.05 DELIVERY, STORAGE AND HANDLING

A. Cover wood products to protect against moisture and growth of mold / mildew.

B. Support stacked products to prevent deformation and to allow air circulation.

PART 2 PRODUCTS

2.01 MANUFACTURERS / PRODUCTS – GENERAL

A. Fire-Rated Assemblies:

1. Fire-Rated Assemblies with Proprietary Manufacturers / Products: Use the manufacturers / products required by the fire-rated assemblies referenced on the Drawings that list proprietary manufacturers / products whether specified herein or not.

2. Fire-Rated Assemblies with Non-Proprietary (Generic) Manufacturers / Products: Use any of the specified products below in fire-rated assemblies referenced on the Drawings that list generic products.

B. Non-Fire-Rated Assemblies: Use any of the products below at the locations noted on the Drawings.

2.02 DIMENSION LUMBER

A. Species and Grade: As specified in the General Notes on the Structural Drawings.

B. Sizes: Nominal sizes as indicated on Drawings, S4S.

C. Moisture Content: Maximum 19 percent, stack or kiln-dried.

D. Backing: 2 x 6 and larger solid lumber, cut from No. 2 Douglas Fir / Larch dimension lumber that is free of large knots, splits or other defects that would reduce the strength of the backing piece.

E. Wood Nailers and Insulation Stops for Roofing: Preservative Pressure Treated Lumber, No. 2 Hem / Fir or Douglas Fir / Larch.

2.03 STRUCTURAL TONGUE AND GROOVE (T&G) DECKING

A. Laminated Tongue and Groove (T&G) Decking: As specified in the General Notes on the Structural Drawings.

1. Exposed to View Faces shall be appearance / architectural grade.

2. Exterior Laminated T&G Decking: Preservative pressure treated wood with clear treatment that will not affect the finishing of the wood. Do not incise.

B. Surfaces exposed to view shall be finished according to Section 09 9000.

1. Colors: _____.

2.04 ENGINEERED LUMBER

A. Engineered Lumber: As specified in the General Notes on the Structural Drawings.

2.05 CONSTRUCTION PANELS

A. APA Rated Plywood Combination Subfloor / Underlayment: As specified in the General Notes on the Structural Drawings. Plywood shall be exterior rated (plies and glue).

B. APA Rated Plywood Roof Sheathing: As specified in the General Notes on the Structural Drawings. Plywood shall be exterior rated (plies and glue).

C. APA Rated Plywood Wall Sheathing: As specified in the General Notes on the Structural Drawings. Plywood shall be exterior rated (plies and glue).

D. Electrical / Phone Component Mounting: 3/4-inch thick APA Rated Fir plywood, sanded face, B-C, exterior grade, PS 1, fire-retardant treated.

2.06 WOOD STAIR TREADS AND RISERS

A. APA Rated Plywood Stair Treads: Provide 1-1/8-inch thick APA rated plywood Underlayment B-C, *Sturd-I-Floor* (combination subfloor / underlayment) with sanded face and plugged crossbands under face.

1. Provide deck screws and construction adhesive for attachment.

B. APA Rated Plywood Stair Risers: Provide 3/4-inch thick APA rated plywood Underlayment B-C, *Sturd-I-Floor* (combination subfloor / underlayment) with sanded face and plugged crossbands under face.

1. Provide deck screws and construction adhesive for attachment.

2.07 ACCESSORIES

A. Fasteners, Anchors, and Anchor Bolts: As specified in the General Notes on the Structural Drawings for structural applications and below for other applications.

1. Fasteners on Building Exterior, in High Humidity or in Preservative Pressure Treated Wood: Stainless steel or hot-dipped galvanized.

a. Use only stainless steel fasteners in wood treated with ACZA preservative treatment.

2. Deck Screws for Attachment of Stair Treads: #10 x 3-1/2-inch flat bugle head coated steel deck screws, Grip-Rite *PrimeGuard Exterior Screws*, or similar.

3. Deck Screws for Attachment of Stair Risers: #8 x 2-1/2-inch flat bugle head coated steel deck screws, Grip-Rite *PrimeGuard Exterior Screws*, or similar.

4. Anchor For Concrete: As specified in the General Notes on the Structural Drawings for structural applications and the following:

   a. Concealed Location: Zinc plated steel, expansion type fasteners manufactured by Rawl or Hilti.

   b. Exposed Location: Hot-dipped galvanized or stainless steel.

   c. Preservative Pressure Treated Wood: Hot-dipped galvanized or stainless steel.

      1) Use only stainless steel anchors in wood treated with ACZA preservative treatment.

B. Die-Stamped Framing Connectors: As specified on the Structural Drawings; hot dipped galvanized steel, ICC approved.

1. Manufacturer / Product: Simpson, *StrongTie* is the basis of design and the standard of quality, function, performance and appearance required for this project.

   a. Simpson; *StrongTie* (specified, basis of design).

   b. Products by other manufacturers may be acceptable, subject to their ability to meet or exceed this standard and provide products conforming with the requirements of the Drawings and this Specification.

   c. Substitutions: Refer to Section 01 6000 for substitution procedures and requirements. Proposed substitutions must match specified product performance.

2. Connectors Exposed to Weather: Hot dip galvanize after fabrication.

C. Joist Hangers: As specified on the Structural Drawings; hot dipped galvanized steel, ICC approved, sized to suit framing conditions and loads.

1. Manufacturer / Product: Simpson, *StrongTie* is the basis of design and the standard of quality, function, performance and appearance required for this project.

   a. Simpson; *StrongTie* (specified, basis of design).

b. Products by other manufacturers may be acceptable, subject to their ability to meet or exceed this standard and provide products conforming with the requirements of the Drawings and this Specification.

c. Substitutions: Refer to Section 01 6000 for substitution procedures and requirements. Proposed substitutions must match specified product performance.

D. Sheathing Clips: H-shaped extruded aluminum, match thickness of panel.

E. Construction Adhesive: APA AFG-01, Waterproof, solvent base, air cure type, cartridge dispensed.

F. Sheet-Applied Air / Vapor Barrier System at Roof: Specified in Section 07 5419.

G. Sill Gasket on Top of Foundation Wall: 1/4-inch thick, match width of sill plate, ribbed closed cell plastic foam from continuous rolls; Owens Corning, *FoamSealR* or similar.

2.08 FACTORY WOOD TREATMENT

A. Preservative Pressure Treatment for Wood in the following Categories:

1. Wood in contact with Roofing, Flashing and Waterproofing: AWPA U1, use category UC3B as suitable for above ground use. Use one of the following treatments:

a. Ammoniacal Copper Zinc Arsenate (ACZA) Treatment.

b. Copper Azole (CAC) Treatment.

2. Wood Sill Plates and other Interior Dry and Damp Locations: AWPA U1, use category AWPA UC3A as suitable for above grade use. Use one of the following treatments:

a. Ammoniacal Copper Zinc Arsenate (ACZA) Treatment.

b. Borate Treatment.

c. Copper Azole (CAC) Treatment.

B. Treatment Identification: Treated lumber members shall have a tag stapled on the end each member identifying the following:

1. Treatment Type.

2. Description of Use.

3. Warranty Statement.

4. Code Report for Treatment.

5. AWPA Code for Use / Exposure Category.

6. Treatment Authority.

7. Third Party Quality Inspection.

PART 3 EXECUTION

3.01 COORDINATION

A. Review, coordinate and accommodate work of other trades that interface with, affect or are affected by the work of this section so as to facilitate the execution of the overall Work of this project in a coordinated and efficient manner.

B. Coordinate installation with solid web wood joist installation specified in Section 06 1733.

C. Coordinate installation with glue-laminated beam installation specified in Section 06 1800.

D. Coordinate the installation of roof sheathing with dry weather and installation of the air / vapor barrier sheet specified in Section 07 5419 so that roof sheathing is not exposed to wet weather or allowed to get wet.

E. Coordinate the layout and location of wall framing and solid 2x wood backing required for attachment and support of toilet and miscellaneous accessories shown on the Drawings and specified in Section 10 2800.

F. Coordinate the layout and location of wall framing and solid 2x wood backing to accommodate layout of wall supported countertops shown on the Drawings and specified in Section 12 3662.

G. Coordinate the layout and location of wall framing and solid 2x wood backing required for attachment and support of surface-mounted plumbing items specified in Division 22.

H. Coordinate the layout and location of wall framing and solid 2x wood backing required for attachment and support of surface-mounted electrical items specified in Division 26 through 28.

I. Coordinate the layout and location of wall framing and solid 2x wood backing required for attachment of exterior siding.

3.02 TEMPORARY WEATHER PROTECTION FOR ROOF SHEATHING

A. General: Roof sheathing shall not be allowed to become wet during roof sheathing installation. Roof sheathing shall not be installed during wet weather.

1. Coordinate the installation of roof sheathing to coincide with dry weather so the roof sheathing is not exposed to wet weather or allowed to get wet.

2. Coordinate the installation of the roofing underlayment specified in Section 07 4000 so the roof sheathing is not exposed to wet weather or allowed to get wet.

3. Schedule the nailing inspection of the roof sheathing with the testing agency or authorities having jurisdiction so that the roof sheathing is not allowed to get wet.

4. Protection: Plan for and provide temporary protection of the building roof sheathing to protect it from becoming wet due to inclement weather.

   a. Provide reinforced waterproof tarps with reinforced edges and grommets suitable for providing temporary waterproof cover over the roof sheathing that is exposed to wet weather.

      1) Tarps shall be large enough to cover entire area of roof deck exposed to weather with minimal joints sealed watertight.

      2) Provide tie down rope and sandbags as required to secure tarp in place.

5. Provide temporary protection so that the roof sheathing will remain dry between the completion of the roof sheathing installation and the installation of the roof underlayment.

3.03 GENERAL

A. Fire-Rated Assemblies Installation: Adhere to the installation requirements of the fire-rated assemblies referenced on the Drawings.

B. Nailing: Nailing shall conform to the size and spacing shown on the Structural Drawings; where nailing is not indicated, provide nailing per IBC Table 2304.6.1. Fastener Schedule.

C. Wood in Contact with Concrete shall be preservative pressure treated.

D. Project Special Requirement: Select fastener lengths that will not penetrate the exposed side of the Laminated Tongue and Groove (T&G) Decking. The decking is an exposed finish that shall not be damaged and the face shall not be penetrated by fasteners at exposed conditions.

3.04 INSTALLATION – WOOD FRAMING

A. Cut and fit framing members accurately, set members level, plumb, and true to line. Discard bowed, crooked or twisted pieces or with defects that would lower required strength or result in unacceptable appearance of exposed members.

B. Wall Plates: Comply with size(s) shown on Structural Drawings.

   1. Bottom plates bearing on concrete shall be preservative pressure treated.

2. Bore holes of proper diameter for anchor bolts accurately; oversized or elongated holes are not acceptable.

3. Install continuous sill gasket under bottom plates of exterior walls.

C. Wall Framing: Cull out bowed, crooked, twisted or inconsistent width framing, align framing members so that finish walls are straight, free of waviness and within specified tolerances.

D. Make provisions for temporary construction loads, and provide temporary bracing sufficient to maintain structure in true alignment and safe condition until completion of erection and installation of permanent bracing.

E. Install structural members full length without splices.

F. Comply with member sizes, spacing, and configurations indicated, and fastener size and spacing indicated on Drawings and Structural General Notes, but not less than required by applicable codes.

G. Install horizontal spanning members with crown edge up and not less than 1-1/2-inches of bearing at each end.

H. Provide framing members at vertical ends / edges of GWB, vertical ends / edges of wall sheathing, and ends of floor sheathing.

I. Construct headers at floor, roof, and wall openings required by the design and work of other trades. Where not shown, provide double joist headers; use metal joist hangers unless otherwise detailed.

J. Provide mid-span bridging at joists as shown on the Drawings and at spans in excess of 8 feet. Fit solid blocking at ends of members and at bearing points.

K. Frame wall openings required by the design and for work of other trades. Where not shown, provide a minimum two (2) or more studs at each jamb; support headers on cripple studs; coordinate with requirements of Structural Drawings.

L. Provide blocking between framing members wherever required by Drawings, IBC, Building Official, or good construction practice.

M. Fire Stops: Install solid 2x lumber blocking fire stops (or other approved material) in accordance with the requirements of the IBC and the Building Official including, but not limited to the following locations:

1. In concealed spaces of stud walls and partitions, including furred spaces, at the ceiling and floor levels and at 10-foot intervals both horizontal and vertical.

2. At interconnections between concealed vertical and horizontal spaces such as occur at soffits, drop ceilings, cove ceilings and suspended lay-in ceilings.

3. Concealed spaces behind combustible trim and finish: Fire stop at intervals not exceeding 10 feet.

4. Concealed spaces behind exterior cornices or other elements: Fire stop at intervals not exceeding 20 feet.

5. In wall framing in line with stair stringers and between stair stringers and wall.

N. Provide additional framing members and / or modifications required to accommodate work of other trades.

O. Provide backing and miscellaneous members as indicated or as required to support work provided by other trades (finishes, fixtures, specialty items, trim, etc.).

3.05 INSTALLATION – WOOD BACKING

A. Install solid wood backing flush with face of studs for attachment of surface mounted work by other trades, 2 x 6 minimum size.

1. Secure backing in wood framed walls as required to support the following loads imposed by surface mounted items; minimum fastening shall be three 16d power driven nails in each end of backing:

a. Grab Bars (350 pound live load).

b. Door Wall Stops (250 pound impact load).

c. Stair Handrails (350 pound live load).

d. Toilet Partitions (250 pound impact load).

e. Mop Sink Pail Hook Brace (350 pound live load).

f. Countertop Support Brackets (300 pound live load).

g. Other Surface Mounted Work (200 pound load).

B. Toilet Accessories: Provide solid 2x wood backing for attachment of toilet accessories.

3.06 INSTALLATION – CONSTRUCTION PANELS

A. Floor Sheathing: Secure panels perpendicular to framing members, with ends staggered and sheet ends over firm bearing.

1. Use only full sized panels, cut to fit; do not use cutoff ends pieced together where a full size panel will fit.

2. Edge / End Gap: Install sheathing panels with gap between sheets as recommended by APA.

3. Provide solid edge blocking between sheets where shown on Drawings.

4. Nail panels to framing at spacing indicated on Structural Drawings.

B. Roof Sheathing: Secure panels perpendicular to framing members, with ends staggered and sheet ends over firm bearing.

1. Install roof sheathing in dry weather and cover with temporary or permanent roofing immediately to avoid panels getting wet.

2. Use only full sized panels, cut to fit; do not use cutoff ends pieced together where a full size panel will fit.

3. Edge / End Gap: Install sheathing panels with gap between sheets as recommended by APA.

4. Nail panels to framing at spacing indicated on Structural Drawings.

C. Wall Sheathing: Orient sheathing panels with long dimension perpendicular to wall studs and ends over firm bearing, stagger end joints between adjacent panels.

1. Use only full sized panels, cut to fit; do not use cutoff ends pieced together where a full size panel will fit.

2. Edge / End Gap: Install sheathing panels with gap between sheets as recommended by APA.

3. Nail panels to framing at spacing indicated on Structural Drawings.

D. Stair Treads and Risers: Install treads and risers with face grain running perpendicular to stair stringers in single, full width panels.

1. Attach to stair stringers with subfloor adhesive and deck screws for secure installation free of any movement or squeaks.

3.07 INSTALLATION – WOOD NAILERS AND INSULATION STOPS FOR ROOFING

A. Install wood nailers and insulation stops for roofing wherever shown or required by roofing system manufacturer.

B. Attach securely to building structure with hot-dipped galvanized fasteners.

3.08 INSTALLATION – ACCESSORIES AND MISCELLANEOUS WOOD

A. Install sill gasket directly on concrete foundation under exterior wall plates. Puncture gasket cleanly and fit tightly to protruding foundation anchor.

B. Coordinate installation of glue-laminated structural units, and plywood web joists.

C. Construct wood curbs at roof openings for roof-mounted mechanical equipment, except where prefabricated curbs are provided.

1. Provide preservative pressure treated wood lumber.

2. Form corners by alternating lapping side members.

D. Backing for Owner-Installed Items: Provide backing for Owner-Installed items indicated on Drawings.

3.09 DRILLING, CUTTING AND NOTCHING

A. Do not drill, cut, notch or alter any structural framing, except as noted on the Drawings and in this specification, without the approval of the Structural Engineer.

3.10 SITE APPLIED WOOD TREATMENT

A. Apply preservative treatment compatible with factory applied treatment at site-sawn cuts, complying with manufacturer's instructions.

B. Allow preservative to dry prior to erecting / installing members.

3.11 ALIGNMENT OF WALL FRAMING

A. Finished walls shall be straight and free of waviness when viewed from the side.

B. Using a 10 foot straight edge, check the alignment of wall framing members marking each stud that is out of alignment for correction.

C. Correct misaligned framing that will result in walls appearing to be wavy or crooked.

D. Plane off excess on studs that are bowed or wider than adjacent studs.

E. Shim face of studs that are bowed or narrower than adjacent studs.

F. Install a sister stud alongside to straighten or align a stud.

3.12 WORKMANSHIP

A. Carpentry work shall be accomplished using the best workmanship, including the following:

1. Crooked, bowed, twisted or damaged lumber culled out and used for blocking / backing.

2. End cuts at proper angle and length for tight fit.

3. Nailed connections free of splitting or damage.

4. Framing aligned plumb and square.

5. Framing conforming to specified tolerances.

6. Bolt / anchor holes not oversized or misaligned.

7. Panel ends aligned at center of supporting framing member.

8. Panel ends and edges properly gapped.

9. Consistent nail / screw spacing on panels.

10. Floor panels are free of movement and squeaks.

11. Stair treads and risers free of movement and squeaks.

B. Any part of the carpentry work installed with improper or poor workmanship shall be removed and replaced.

3.13 TOLERANCES

A. Framing Members: 1/4-inch from true position, maximum, provided other tolerances are met; does not apply to face alignment of wall framing members.

B. Wall Plane (Flatness): Maximum of 1/4-inch in 10-feet out of plane (this equates to no more than 1/8-inch gap at each end of a 10-foot long straightedge center on high spot in wall, or no more than 1/8-inch gap at center of a 10-foot long straightedge centered on low spot in wall).

C. Wall Out Of Plumb: Maximum 1/8-inch.

D. Surface Flatness of Floor and Roof Decks: 1/8-inch in 10-feet maximum, and 1/4-inch in 30-feet maximum.

E. Variation from Plane (Other than Floors): 1/8-inch in 10-feet maximum, and 1/4-inch in 30-feet maximum.

3.14 FIELD QUALITY CONTROL

A. Contractor Quality Control: Employ / assign quality control personnel to monitor the work of this section for conformance to the requirements of the Contract Documents and to good construction practices.

1. Contractor is solely responsible for managing and controlling the quality of the work and conformance with the requirements of the Contract Documents.

B. Conduct the following inspections of carpentry work:

1. Inspect framing for conformance to structural requirements as work progresses, including, but not limited to nailing, screwing, blocking, fasteners, hold-downs, framing connectors.

2. Inspect wall framing to confirm walls are straight and plumb in conformance with specified tolerances.

3. Inspect panel nailing / screwing for conformance to specified nailing / screwing schedule as work progresses and prior to cover.

4. Inspect framing prior to cover for damage and any notching, cutting or boring of framing that exceeds Code or structural requirements.

5. Just prior to cover, after building is dried in and framing is dry, inspect wall framing using a 10 foot long straight edge to identify framing members that are out of alignment and require correction prior to cover.

C. Owner will engage an independent inspection agency to perform field inspections and tests and prepare reports, in accordance with Section 01 4500.

1. Coordinate inspection of floor, roof, and wall sheathing installation by independent testing company when completed and prior to cover.

2. Provide testing agency with safe access to the work to allow required inspections.

3. Correct deficiencies or remove and replace any work that inspections indicate do not comply with specified requirements.

D. Non-conforming work will be reinspected and tested for compliance at Contractor's expense.

E. Schedule of Required Inspections and Tests: Refer to Structural Drawings for quality assurance and special inspection requirements for carpentry related work.

END OF SECTION

SECTION 06 1733

SOLID WEB WOOD JOISTS

PART 1 GENERAL

1.01 RELATED DOCUMENTS

A. Drawings and general provisions of the Contract, including General Conditions, Supplementary Conditions and Divisions 00 and 01 Specification Sections, apply to work of this section.

1.02 SECTION INCLUDES

A. Solid Web Wood Joists.

1.03 REFERENCES

A. References shall be the edition current as of the date of the Contract Documents.

B. IBC - International Building Code.

C. ICC - International Code Council.

D. WAC 51-50 - Washington Administrative Code, State of Washington Building Code.

1.04 SUBMITTALS

A. Refer to Section 01 3300 for submittal procedures.

B. Product Data: Provide manufacturer's product literature showing joist configurations, bearing and anchor details, bridging and bracing.

C. Shop Drawings: Provide plan view layout of joists; indicate sizes and spacing of joists, loads and joist cambers, framed openings.

1. Shop Drawings shall be stamped by Structural Engineer licensed as such in the State of Washington.

D. Deferred Submittal to Building Official: Submit shop drawings and structural calculations to the Building Official for review and approval as a deferred submittal; make any corrections and provide any additional information required to obtain approval by Building Official.

1. Approved Fabricator: Provide documentation of manufacturer's approved fabricator status conforming to Chapter 17 of the International Building Code as required by Building Official for approval.

2. Certificate of Compliance: At completion of fabrication, submit a certificate of compliance to the Building Official stating that the work was performed in accordance with the approved construction documents (per Section 1704 of the International Building Code).

1.05 QUALITY ASSURANCE

A. Joists shall be designed and manufactured to the standards set forth in a current, approved ICC ES Report (International Code Council Evaluation Service) for the joists.

B. Joists shall be manufactured in a plant approved for fabrication by the building code and under the supervision of an approved third party inspection agency.

C. Manufacturer: Company specializing in manufacturing the products specified in this section with a minimum of three (3) years of documented experience.

D. Design joists under direct supervision of a Professional Structural Engineer experienced in design of products of this type and licensed as such in the State of Washington.

1.06 REGULATORY REQUIREMENTS

A. Conform to applicable code for loads, seismic zoning, and other governing load criteria.

1.07 DELIVERY, STORAGE AND HANDLING

A. Deliver, store and handle joists in conformance with manufacturer's instructions.

B. Protect joists from warping or other distortion by stacking in vertical position, braced to resist movement.

C. Cover joists to prevent them from weather and moisture, store up off ground.

1.08 FIELD MEASUREMENTS

A. Verify that shop drawing dimensions match actual field measurements.

PART 2 PRODUCTS

2.01 SOLID WEB WOOD JOISTS

A. Joist Design: Fabricator is responsible for the structural engineering design for joists and any connections not shown on the Drawings.

1. Engage the services of a qualified professional Structural Engineer, experienced in design of solid web wood joists and currently registered in the State of Washington, to provide the structural engineering design.

2. Design joists in conformance the following:

a. Design solid web wood joists to withstand design loads and with deflection factor(s) in conformance with the requirements shown on the Structural Drawings.

b. Design Criteria listed in the General Notes on the Structural Drawings.

c. International Building Code (IBC) and State of Washington Building Code WAC 51-50.

3. Work of Other Trades: Review and coordinate work of other trades that interface with, connect to, pass through or are supported by the solid web wood joists.

a. Make whatever provisions are necessary to the design, layout and fabrication of the solid web wood joists to accommodate work by others while maintaining their specified structural capacity.

b. Design solid web wood joists to allow for support, connection and installation of mechanical ducts, pipes or other large items supported by joists.

B. Manufacturers / Products: Subject to their ability to conform to the requirements of the Drawings and this Specification, the following manufacturers may provide products:

1. Redbuilt LLC.

2. Anthony-Domtar, Inc.

3. Pacific Woodtech Corporation.

4. Weyerhaeuser.

5. Substitutions: Refer to Section 01 6000 for substitution procedures and requirements.

2.02 MATERIALS

A. Joist Materials: Flange members, web members, adhesives and connectors shall conform to the provisions of a current, approved ICC ES Report.

B. Joist Bridging: Type, size and spacing recommended by joist manufacturer.

2.03 ACCESSORIES

A. Wood Blocking and Framing for Openings: As shown on Structural Drawings and required by joist design.

B. Fasteners: Hot dip galvanized steel, type to suit application.

2.04 FABRICATION

A. Verify dimensions and site conditions prior to fabrication.

B. Fabricate joists to achieve the architectural and structural requirements shown on the Drawings and specified herein and in accordance with approved shop drawings and the current ICC ES Report.

2.05 SOURCE QUALITY CONTROL

A. Joists shall be manufactured in a plant listed in the joist ICC ES Report and under the supervision of an approved third-party inspection agency.

B. Each of the joists shall be identified by a stamp indicating the joist series, ICC ES report number, manufacturer's name, plant number, date of fabrication, and the independent inspection agency’s logo.

PART 3 EXECUTION

3.01 COORDINATION

A. Review, coordinate and accommodate work of other trades that interface with, affect or are affected by the work of this section so as to facilitate the execution of the overall Work of this project in a coordinated and efficient manner.

B. Coordinate installation with carpentry work specified in Section 06 1000 and glue-laminated beam installation specified in Section 06 1800.

3.02 EXAMINATION

A. Verify bearing conditions installed by other sections are acceptable for solid web wood joists installation in accordance with manufacturer’s instructions.

B. Do not proceed with installation until unacceptable conditions are corrected.

C. Start of installation indicates acceptance of bearing and site conditions.

3.03 PREPARATION

A. Coordinate placement of support items.

3.04 INSTALLATION

A. Install joists and bridging in strict accordance with approved shop drawings and manufacturer's installation instructions.

B. Set structural members level (as appropriate) and plumb, in correct position.

C. Make provisions for erection loads, and for sufficient temporary bracing to maintain structure plumb, and in true alignment until completion of erection and installation of permanent bracing.

D. Install blocking, chord stiffeners or anything else required by manufacturer wherever other work or framing is supported from joists.

E. Install permanent bridging and bracing.

F. Frame openings and install chord stiffeners, headers, blocking, hangars, supports and other items recommended by manufacturer as required to accommodate the work of other trades.

G. Place headers and supports to frame openings required

H. Frame openings between joists with lumber in accordance with Section 06 1000 and as shown on the Drawings.

I. Coordinate placement of sheathing with work of this section.

3.05 DRILLING, CUTTING AND NOTCHING

A. Do not drill, cut, notch or alter joists without the written approval of the joist manufacturer and stamped by their Structural Engineer.

3.06 FIELD QUALITY CONTROL

A. Contractor Quality Control: Employ / assign quality control personnel to monitor the work of this section for conformance to the requirements of the Contract Documents and to good construction practices.

1. Contractor is solely responsible for managing and controlling the quality of the work and conformance with the requirements of the Contract Documents.

END OF SECTION

SECTION 06 1800

GLUE-LAMINATED WOOD UNITS

PART 1 GENERAL

1.01 RELATED DOCUMENTS

A. Drawings and general provisions of the Contract, including General Conditions, Supplementary Conditions and Divisions 00 and 01 Specification Sections, apply to work of this section.

1.02 SECTION INCLUDES

A. Glue-Laminated Structural Units.

B. Glue-Laminated (Wood) Stair Tread and Landing Timbers.

1.03 REFERENCES

A. References shall be the edition current as of the date of the Contract Documents.

B. AITC - American Institute of Timber Construction.

C. AITC 117 - Standard Specifications for Structural Glued Laminated Timber of Softwood Species.

D. AITC A190.1 - American National Standard for Wood Products - Structural Glued Laminated Timber.

E. AWPA - American Wood Protection Association.

F. AWPA U1 - Use Category System: User Specification for Treated Wood.

1.04 SUBMITTALS

A. Refer to Section 01 3300 for submittal procedures.

B. Shop Drawings: Indicate sizes and spacing of members, loads and cambers, bearing and anchor details, bridging and bracing, framed openings, wood species and grade, special requirements for exposed to view members.

C. Certification: Provide certificate of preservative pressure treatment of glue-laminated members installed on Project from treatment facility; include the treatment date, name / address of treatment plant, name of Contractor, name of Project, a listing of the wood materials treated and the AWPA Use Category and retention level of preservative treatment.

1.05 QUALITY ASSURANCE

A. Manufacturer / Fabricator: Company specializing in manufacture of glue-laminated structural units with a minimum of three (3) years of documented experience and certified by AITC in accordance with AITC A190.1.

1.06 REGULATORY REQUIREMENTS

A. Conform to applicable codes for loads, seismic zoning, and other load criteria.

1.07 DELIVERY, STORAGE AND PROTECTION

A. Protect members to AITC requirements for individually wrapped.

B. Leave individual wrapping in place until finishing occurs.

PART 2 PRODUCTS

2.01 MATERIALS

A. Manufacturers:

1. Company specializing in manufacture of glue-laminated structural units and certified by the AITC.

B. Glue-Laminated Structural Units:

1. Lumber: As specified in the General Notes on the Structural Drawings, conforming to the appearance requirements noted under Fabrication in this section.

2. Laminating Adhesive: As specified in General Notes on the Structural Drawings.

C. Glue-Laminated (Wood) Stair Tread and Landing Timbers:

1. Lumber: Douglas Fir, No. 1 or Select Structural Grade, conforming to the appearance requirements noted under Fabrication in this section.

2. Laminating Adhesive: Waterproof adhesive conforming to AITC requirements.

D. Wood Sealer: Conform to AITC A190.1 requirements.

E. Finishes: Refer to Section 09 9000.

2.02 WOOD TREATMENT

A. Wood Preservative: Clear, type; AWPA U1 using preservative designated in AWPA UC3B as suitable for above grade use to 0.25 percent retention.

1. Kiln dry after treatment to maximum moisture content of 19 percent.

2. Do not incise wood exposed to view in the finish construction.

B. Shop treat wood materials in accordance with manufacturer's instructions.

C. Treat glue-laminated structural units exposed to weather or on the exterior of the building.

2.03 FABRICATION

A. Glue-Laminated Structural Members: Fabricate in accordance with AITC 117:

1. Concealed From View: AITC Industrial Grade.

2. Exposed To View: Fabricate in accordance with AITC Premium Architectural grade and the following special requirements:

a. Lumber Appearance Requirements:

1) Lumber edges, ends and faces exposed to view shall not have knots larger than 1/4-inch diameter and be free of splits, wane, damage or visual defects.

2) No sap wood exposed to view.

3) Exposed to view faces, edges and ends shall be free of voids requiring filler.

B. Glue-Laminated (Wood) Stair Tread and Landing Timbers: Fabricate in accordance with AITC 117:

1. Fabricate in accordance with AITC Premium Architectural grade and the following special requirements:

a. Lumber Appearance Requirements:

1) No more than two (2) knots of 1/4-inch diameter maximum on exposed edges of any individual board in exposed to view top of tread.

2) No knots in exposed to view front tread face.

3) No sap wood exposed to view.

4) Knots exposed to view shall be tight and sound.

5) Exposed to view faces, edges and ends shall be free of voids requiring filler.

b. Stair Treads and Landings: 3-1/8-inch thick glue-laminated timbers with cast iron stair nosings specified in Section 05 5500. Nosings to run full length of tread and routing of tread or landing shall be completed before tread or landing installation.

C. Verify dimensions and site conditions prior to fabrication.

D. Cut and fit members accurately to length to achieve tight joint fit.

E. Fabricate member with camber built in.

F. Do not splice or join members in locations other than those indicated without permission.

G. After end trimming, seal with penetrating sealer in accordance with AITC requirements.

H. Field Finishing of Exposed Members: Specified in Section 09 9000.

2.04 ACCESSORIES

A. Fasteners, Anchors and Anchor Bolts: As specified in the General Notes on the Structural Drawings for structural applications.

1. Fasteners in Exterior or Treated Wood Locations: Hot-dipped galvanized.

2.05 FINISHING

A. Glue-Laminated Structural Members Exposed to View: Factory sand surfaces smooth with progressively finer grit sandpaper to eliminate sanding marks, ending with 180 grit.

1. Finishing: Factory apply one (1) coat of semi-transparent oil-based stain, additional coats are field applied.

a. Field finishing is specified in Section 09 9000.

b. Colors: _____.

2. Provide individual protective wrapping for each structural unit exposed to view.

B. Glue-Laminated (Wood) Stair Tread and Landing Timbers: After rough sanding is completed, finish sand exposed faces, edges and ends with progressively finer grit sandpaper to eliminate sanding marks, ending with180 grit.

1. Finishing: Shop applied semi-transparent oil-based stain system. Finish is completely applied in the shop.

a. Finishing system is specified in Section 09 9000.

b. Colors: _____.

2. Provide individual protective wrapping for each unit.

PART 3 EXECUTION

3.01 COORDINATION

A. Review, coordinate and accommodate work of other trades that interface with, affect or are affected by the work of this section so as to facilitate the execution of the overall Work of this project in a coordinated and efficient manner.

B. Coordinate installation of glue-laminated units with carpentry specified in Section 06 1000.

C. Coordinate machine cutting of timbers to receive stair nosing specified in Section 05 5500 prior to installation of treads.

D. Coordinate installation of timbers to follow finishing by Section 09 9000.

3.02 EXAMINATION

A. Verify that supports are ready to receive units.

B. Verify sufficient end bearing area.

3.03 PREPARATION

A. Coordinate placement of support items.

3.04 INSTALLATION – GLUE-LAMINATED STRUCTURAL UNITS

A. Lift members using protective straps to prevent visible damage.

B. Set structural members level and plumb, in correct positions or sloped where indicated.

C. Provide temporary bracing and anchorage to hold members in place until permanently secured.

D. Fit members together accurately without trimming, cutting, or other unauthorized modification.

E. Swab and seal the interior wood surfaces of field drilled holes and cuts in members with clear wood preservative.

F. Protect exposed to view units from damage.

3.05 INSTALLATION – GLUE-LAMINATED STAIR TREAD AND LANDING TIMBERS

A. Cut timbers accurately to length and install level and in correct positions, butt landing timbers together tight.

B. Lag bolt timbers securely to support angles on steel stair structure from underside, drill pilot holes to receive lag bolts.

C. Fit members together accurately without trimming, cutting, or other unauthorized modification.

D. Protect tread and landing units from damage.

3.06 DRILLING, CUTTING AND NOTCHING

A. Do not drill, cut, notch or alter structure units without the approval of the Structural Engineer.

3.07 SITE APPLIED WOOD TREATMENT

A. Apply preservative treatment compatible with factory applied treatment at site-sawn cuts, complying with manufacturer's instructions.

B. Allow preservative to dry prior to installing members.

3.08 PROTECTION AND CLEANING

A. Protect surfaces exposed to view in the finished building from damage, construction dirt, stains and weathering.

B. Clean any surfaces that become stained, dirty or weathered to restore wood to original, natural appearance.

C. Wrap glue-laminated members that will be exposed to view to provide protection from damage and stains during construction. Take whatever measures are necessary to prevent both physical and visual damage to these exposed-to-view finish wood elements.

D. Provide heavy cardboard or panel protection for each stair tread and landing timber, protect from damage or stains until acceptance of project by Owner.

3.09 FIELD QUALITY CONTROL

A. Contractor Quality Control: Employ / assign quality control personnel to monitor the work of this section for conformance to the requirements of the Contract Documents and to good construction practices.

1. Contractor is solely responsible for managing and controlling the quality of the work and conformance with the requirements of the Contract Documents.

END OF SECTION

SECTION 07 1000

BELOW-GRADE WATERPROOFING

PART 1 GENERAL

1.01 RELATED DOCUMENTS

A. Drawings and general provisions of the Contract, including General Conditions, Supplementary Conditions and Divisions 00 and 01 Specification Sections, apply to work of this section.

1.02 SECTION INCLUDES

A. Elevator Pit Waterproofing.

1.03 SUBMITTALS

A. Refer to Section 01 3300 for submittal procedures.

B. Product Data: Provide manufacturer's product data for each waterproofing and composite drainage / protection board system component.

C. Details: Submit manufacturer's approved detail drawings for installation of products specified for each different condition found on this project.

D. Applicator Approval: Submit a letter from the waterproofing manufacturer, dated within the previous 30 days, that states that the applicator is approved by the manufacturer for installing the waterproofing products being installed on this project.

E. Sample Warranty: Submit a sample of the manufacturer's warranty matching the specified warranty requirements.

1.04 QUALITY ASSURANCE

A. Manufacturer: Provide waterproofing products produced by a manufacturer with a minimum of ten (10) years of experience in the waterproofing industry.

B. Installer Qualifications: Company specializing in performing the work of this section with a minimum of five (5) years of experience installing waterproofing products.

1. Installer shall, at the time the project is bid, be an approved applicator of the manufacturer's products installed on this project.

C. Manufacturer Field Services: Manufacturer's field representative shall inspect waterproofing material installation for compliance with manufacturer's installation details / instructions and site specific details.

1. Include substrate examination, beginning of waterproofing installation, at periodic intervals during installation, and final inspection prior to concrete or backfill placement against the waterproofing.

2. Manufacturer's field representative shall report any material or installation deficiencies to the applicator and general contractor immediately for correction prior to proceeding with placement of concrete or backfill.

1.05 JOB CONDITIONS

A. Coordinate various trades to avoid unnecessary traffic over or damage to the waterproofing system.

B. Coordinate waterproofing work with other trades. The applicator shall have sole right of access to the specified areas for the time needed to complete the application.

C. Protect adjoining surfaces not to be waterproofed against damage or soiling. Protect plants, vegetation and animals which might be affected by waterproofing operations.

D. Maintain work area in a neat and orderly condition, removing empty containers, rags, and rubbish daily from the site.

1.06 PRODUCT DELIVERY, STORAGE AND HANDLING

A. Deliver materials to project site in original, factory-sealed, unopened containers bearing manufacturer's name and label intact and legible with following information:

1. Name of material.

2. Manufacturer's stock number and date of manufacture.

3. Material safety data sheet.

B. Store membrane and accessory products in a protected area out of direct sunlight and within temperature range recommended by manufacturer. Protect from rain, physical damage and construction traffic.

1.07 GUARANTEE

A. Contractor' Guarantee: Contractor shall guarantee the waterproofing installation for a period of five (5) years against defects in installed materials and workmanship including a five (5) year watertight guarantee. Correct any waterproofing that is defective, improperly installed or leaking for a period of five (5) years at no cost to the Owner.

B. Manufacturer's Installed System Warranty: Manufacturer shall provide a ten (10) year warranty for the installed waterproofing system against failure resulting in water leaks to the interior side of the building structure and during the warranty period shall make repairs or replacement of failures in the installed waterproofing system without additional cost to the Owner.

PART 2 PRODUCTS

2.01 ELEVATOR PIT WATERPROOFING

A. Provide a complete waterproofing system, including drainage mat and accessories, products shall be manufactured by or approved in writing by a single manufacturer for their waterproofing system:

1. Bentonite Waterproofing: 1.1 lbs. of sodium bentonite per square foot encapsulated between two layers of high strength geotextile with HDPE liner.

   a. Manufacturer / Product: CETCO, *Volclay Voltex DS* is the basis of design and the standard of quality, function and performance required for this project.

      1) CETCO; *Volclay Voltex DS* (specified, basis of design).

      2) Products by other manufacturers may be acceptable, subject to their ability to meet or exceed this standard and provide products conforming with the requirements of the Drawings and this Specification.

      3) Substitutions: Refer to Section 01 6000 for substitution procedures and requirements. Proposed substitutions must match specified product performance.

2. Accessories:

   a. Termination Bars: Continuous aluminum bar; type recommended by manufacturer; provide suitable anchors for attachment to concrete wall.

   b. Bentonite Mastic: Trowel grade sodium bentonite compound used as a detailing mastic around penetrations and corner transitions.

      1) Manufacturer / Product: CETCO, *Bentonseal* is the basis of design and the standard of quality, function and performance required for this project.

         a) CETCO; *Bentonseal* (specified, basis of design).

b) Products by other manufacturers may be acceptable, subject to their ability to meet or exceed this standard and provide products conforming with the requirements of the Drawings and this Specification.

c) Substitutions: Refer to Section 01 6000 for substitution procedures and requirements. Proposed substitutions must match specified product performance.

c. Granular Bentonite: A pure granular bentonite used to detail critical areas.

1) Manufacturer / Product: CETCO, *Waterstoppage* is the basis of design and the standard of quality, function and performance required for this project.

a) CETCO; *Waterstoppage* (specified, basis of design).

b) Products by other manufacturers may be acceptable, subject to their ability to meet or exceed this standard and provide products conforming with the requirements of the Drawings and this Specification.

c) Substitutions: Refer to Section 01 6000 for substitution procedures and requirements. Proposed substitutions must match specified product performance.

d. Protection Mat: Heavy geotextile protection course material installed over waterproofing to protect from construction site damage.

1) Manufacturer / Product: CETCO, *Protection Mat 10V / 16VH* is the basis of design and the standard of quality, function and performance required for this project.

a) CETCO; *Protection Mat 10V / 16VH* (specified, basis of design).

b) Products by other manufacturers may be acceptable, subject to their ability to meet or exceed this standard and provide products conforming with the requirements of the Drawings and this Specification.

c) Substitutions: Refer to Section 01 6000 for substitution procedures and requirements. Proposed substitutions must match specified product performance.

e. Provide any other accessories recommended by manufacturer.

PART 3 EXECUTION

3.01 COORDINATION

A. Review, coordinate and accommodate work of other trades that interface with, affect or are affected by the work of this section so as to facilitate the execution of the overall Work of this project in a coordinated and efficient manner.

B. Coordinate the required surface preparation of concrete substrate surfaces with Section 03 3000.

C. Coordinate sealing penetrations by others through waterproofing.

3.02 EXAMINATION

A. Verify existing conditions before starting work.

B. Examine existing substrate and conditions before starting work for conformance with manufacturer’s requirements. Substrates shall be smooth and even; gaps or voids shall be filled.

C. Verify that substrate(s) (which have been previously installed under other sections) are acceptable for waterproofing installation conforming to requirements of the waterproof membrane manufacturer.

D. Verify substrate surfaces are durable; free of matter detrimental to adhesion or application of waterproofing system.

E. Verify items which penetrate surfaces to receive waterproofing conform to requirements of the waterproof membrane manufacturer and are securely installed.

F. Start of installation indicates installer's acceptance of substrate and conditions.

3.03 PREPARATION

A. Protect adjacent surfaces not designated to receive waterproofing.

B. Clean and prepare surfaces to receive waterproofing in accordance with manufacturer's instructions.

C. Concrete Surfaces: Conform to requirements of the waterproofing manufacturer.

D. Do not apply waterproofing to surfaces unacceptable to membrane manufacturer.

E. Seal cracks and joints with sealant using depth to width ratio as recommended by sealant manufacturer.

3.04 INSTALLATION – ELEVATOR PIT WATERPROOFING

A. Install waterproofing in strict accordance with manufacturer's published installation instructions to properly prepared substrate that conforms to manufacturer's published requirements.

B. Seal items penetrating through membrane watertight in manner recommended by membrane manufacturer.

3.05 INSTALLATION – PROTECTION MAT

A. Install protection mat over entire waterproof membrane in accordance with manufacturer installation instructions.

B. Place protection mat directly against entire membrane surface; butt joints tight, scribe and cut boards around projections, penetrations and interruptions.

C. Attach protection matto waterproof membrane substrate as recommended by manufacturer.

3.06 PROTECTION

A. Do not permit traffic over unprotected or uncovered membrane.

B. Do not leave waterproofing exposed to the weather longer than recommended by manufacturer.

3.07 FIELD QUALITY CONTROL

A. Contractor Quality Control: Employ / assign quality control personnel to monitor the work of this section for conformance to the requirements of the Contract Documents and to good construction practices.

1. Contractor is solely responsible for managing and controlling the quality of the work and conformance with the requirements of the Contract Documents.

2. Contractor shall inspect the System work as it progresses for conformance with the Contract Documents.

B. System manufacturer's field representative shall review the installation requirements with the installer and perform field inspections and prepare written reports; coordinate the following minimum site visits / inspections.

1. Inspect and approve substrate surfaces prior to start of application.

2. Review installation concerns and requirements, including detailing at openings, penetrations, etc. with installer.

3. Inspect waterproofing during application on several different times / days as required to confirm proper application procedures are being employed.

4. Inspect and approve waterproofing application after completion, prior to cover.

5. Identify any deficiencies in the work that do not conform to the manufacturer's requirements.

6. Reinspect deficient work for compliance with manufacturer's requirements.

C. Contractor shall promptly correct any deficiencies observed in the work or noted by the manufacturer's field representative.

END OF SECTION

SECTION 07 2100

BUILDING INSULATION

PART 1 GENERAL

1.01 RELATED DOCUMENTS

A. Drawings and general provisions of the Contract, including General Conditions, Supplementary Conditions and Divisions 00 and 01 Specification Sections, apply to work of this section.

1.02 SECTION INCLUDES

A. Batt Insulation.

1. Thermal Batt Insulation.

a. Thermal Batt Insulation for Thermal Building Envelope.

2. Sound Insulation.

B. Rigid Foam Insulation Board.

1. Perimeter Foundation Insulation.

2. Wood Header Insulation.

C. Smart Vapor Retarder.

1.03 REFERENCES

A. References shall be the edition current as of the date of the Contract Documents.

B. ASTM C518 - Standard Test Method for Steady-State Thermal Transmission Properties by Means of the Heat Flow Meter Apparatus.

C. ASTM C578 - Standard Specification for Rigid, Cellular Polystyrene Thermal Insulation.

D. ASTM C665 - Standard Specification for Mineral-Fiber Blanket Thermal Insulation for Light Frame Construction and Manufactured Housing.

E. ASTM D1621 - Standard Test Method for Compressive Properties of Rigid Cellular Plastics.

F. ASTM E84 - Standard Test Method for Surface Burning Characteristics of Building Materials.

G. ASTM E96/E96M - Standard Test Methods for Gravimetric Determination of Water Vapor Transmission Rate of Materials.

H. ASTM E2178 - Standard Test Method for Determining Air Leakage Rate and Calculation of Air Permeance of Building Materials.

I. WSEC - Washington State Energy Code.

1.04 SUBMITTALS

A. Refer to Section 01 3300 for submittal procedures.

B. Product Data: Submit manufacturer's data sheet for each product specified.

C. Certification Letter (As Required by WSEC): Installer shall submit a certification letter listing each type of insulation, manufacturer of each insulation type and the R-value of each insulation type for each type of insulation used in the Building Thermal Envelope. Installer shall sign and date the letter. Post letter on the job site as required by the Building Official.

D. Closeout Documents: Provide manufacturer's product data sheets with documentation for compliance with WSEC.

1.05 REGULATORY REQUIREMENTS

A. Materials and installation shall conform to the 2018 WSEC, including but not limited to the following requirements:

1. Identification mark shall be applied to all insulation materials and insulation installed such that the R-value mark is readily observable upon inspection as required by WSEC 3.03.1.2.

1.06 DELIVERY, STORAGE AND HANDLING

A. Deliver materials in original and unopened packages, containers, or bundles, with brand names and manufacturer's labels intact and legible.

B. Store materials in dry location, fully protected from weather and direct exposure to sunlight.

1.07 ENVIRONMENTAL REQUIREMENTS

A. Interior building insulation shall not be installed until the following conditions have been achieved in areas to be insulated:

1. Initial Building Dry Out and Environmental Control of building is complete and operational as specified in Section 01 7343.

2. Roofing is installed, air / water barrier system is installed, exterior openings are watertight, building is dried in and building interior is thoroughly dried out.

3. Wood framing moisture content shall be at no more than 15%.

4. Concrete floors are dry.

5. Relative humidity level of interior building air is maintained below 60% with adequate temporary heat, exhaust and air circulation to remove construction-produced water vapor and prevent areas of high relative humidity.

PART 2 PRODUCTS

2.01 BATT INSULATION MATERIALS

A. Thermal Batt Insulation (Building Thermal Envelope):

1. Manufacturer / Product: Owens Corning, *EcoTouch Pink Fiberglas Batt & Roll Insulation* is the standard of quality, function and performance required for this project.

   a. Owens Corning; *EcoTouch Pink Fiberglas Batt & Roll Insulation* (specified, basis of design).

   b. Products by other manufacturers may be acceptable, subject to their ability to meet or exceed this standard and provide products conforming with the requirements of the Drawings and Specification.

   c. Substitutions: Refer to Section 01 6000 for substitution procedures and requirements. Proposed substitutions must match specified product performance.

2. Preformed glass fiber batt; with formaldehyde-free binder, friction fit, unfaced, conform to ASTM C665.

3. Widths required for snug friction fit between framing members free of gaps or voids.

4. R-Value: As indicated on Drawings.

B. Sound Insulation (Glass Fiber): Preformed glass fiber batt; with formaldehyde-free binder, friction fit, unfaced, conforming to ASTM C665; non-combustible, code approved for exposed installation without need for any cover.

1. Manufacturer / Product: Owens Corning, *EcoTouch Pink Fiberglas Batt & Roll Insulation* is the standard of quality, function and performance required for this project.

   a. Owens Corning; *EcoTouch Pink Fiberglas Batt & Roll Insulation* (specified, basis of design).

b. Products by other manufacturers may be acceptable, subject to their ability to meet or exceed this standard and provide products conforming with the requirements of the Drawings and Specification.

c. Substitutions: Refer to Section 01 6000 for substitution procedures and requirements. Proposed substitutions must match specified product performance.

2. Widths required for snug friction fit between framing members free of gaps or voids.

3. Thicknesses: 3-1/2-inches or 5-1/2-inches, depending on wall framing thickness.

2.02 RIGID FOAM INSULATION BOARD

A. Rigid Foam Perimeter Foundation Insulation: Extruded Polystyrene Board Insulation conforming to ASTM C578, Type IV; extruded cellular type polystyrene board with either natural skin or cut cell surfaces; with the following characteristics:

1. Manufacturer / Product: Owens Corning, *Foamular XPS* is the standard of quality, function and performance required for this project.

a. Owens Corning; *Foamular XPS* (specified, basis of design).

b. Products by other manufacturers may be acceptable, subject to their ability to meet or exceed this standard and provide products conforming with the requirements of the Drawings and Specification.

c. Substitutions: Refer to Section 01 6000 for substitution procedures and requirements. Proposed substitutions must match specified product performance.

2. Board Edges: Square.

3. Compressive Strength: 25 psi per ASTM D1621.

4. Water Absorption, maximum: 0.3 percent, volume.

5. Total R-Value: As indicated on Drawings.

B. Rigid Foam Wall Insulation (Below-Grade Applications and Wood Headers): Extruded Polystyrene Board Insulation, ASTM C578, Type IV; extruded cellular type polystyrene board with either natural skin or cut cell surfaces; with the following characteristics:

1. Manufacturer / Product: Owens Corning, *Foamular XPS* is the standard of quality, function and performance required for this project.

a. Owens Corning; *Foamular XPS* (specified, basis of design).

b. Products by other manufacturers may be acceptable, subject to their ability to meet or exceed this standard and provide products conforming with the requirements of the Drawings and Specification.

c. Substitutions: Refer to Section 01 6000 for substitution procedures and requirements. Proposed substitutions must match specified product performance.

2. Board Edges: Square.

3. Compressive Resistance: 20 psi per ASTM D1621.

4. Water Absorption, maximum: 0.3 percent, volume.

5. Surface Burning Characteristics: Flame spread / smoke developed of 5/165 in accordance with ASTM E84.

6. Thermal Value Test Standard: Stabilized R-values @ 75°F mean temperature determined in accordance with ASTM C518.

7. Total R-Value: As indicated on Drawings.

C. Spray Foam Sealant (For Gap Filler): Specified in Section 07 9000.

2.03 SMART VAPOR RETARDER (VAPOR RETARDER AT WALLS)

A. Manufacturer / Product: Products by Pro Clima International are the basis of design and the standard of quality, function and performance required for this project.

1. Pro Clima International (specified, basis of design).

2. Products by other manufacturers may be acceptable, subject to their ability to meet or exceed this standard and provide products conforming with the requirements of the Drawings and this Specification.

3. Substitutions: Refer to Section 01 6000 for substitution procedures and requirements. Proposed substitutions must match specified product performance.

B. Smart Vapor Retarder: High-performance reinforced intelligent vapor check film vapor retarder sheet with variable vapor permeance between 0.13 and 13 perms depending on relative humidity level.

1. Manufacturer / Product: Pro Clima International; *Intello Plus* or *Intello X.*

2. Water Vapor Permeance:

a. ASTM E96/E96M-a: 0.23 perms.

b. ASTM E96/E96M: <0.13 perms – 13 perms.

3. Air Permeance: ASTM E2178: 0.00005 cfm / ft2.

4. Fire Hazard Classification: ASTM E84, Class A:

a. Maximum Flame Spread Index: 0.

b. Maximum Smoke Developed Index: 35.

C. Tape: Adhesive tape as recommended by manufacturer for specific conditions and materials.

1. Manufacturer / Product: Pro Clima International; *TESCON Vana.*

D. Primer for Wood Surfaces:

1. Manufacturer / Product: Pro Clima International; *TESCON PRIMER RP.*

E. Adhesive / Sealant: Adhesives approved by smart vapor retarder sheet manufacturer.

1. Manufacturer / Product: Pro Clima International; *Contega HF.*

F. Staples: As approved by the smart vapor barrier retarder sheet manufacturer for installation on to wood framing.

G. Accessories: Any accessories required to provide an airtight and vaportight installation including the following:

1. Sealing Grommets for Cable Penetrations:

a. Manufacturer / Product: Pro Clima International; *KAFLEX mono.*

2. Sealing Grommets for Conduit / Pipe Penetrations:

a. Manufacturer / Product: Pro Clima International; *ROFLEX 100.*

2.04 ACCESSORIES

A. Adhesive: Low VOC adhesive recommended by manufacturer for application.

PART 3 EXECUTION

3.01 COORDINATION

A. Review, coordinate and accommodate work of other trades that interface with, affect or are affected by the work of this section so as to facilitate the execution of the overall Work of this project in a coordinated and efficient manner.

B. Schedule installation of batt insulation to occur after building is fully enclosed and materials dried out.

3.02 EXAMINATION

A. Confirm that building conforms to the environmental requirements specified in Part 1 of this section.

B. Verify that substrate, adjacent materials, and insulation materials are completely dry and that substrates are ready to receive insulation.

1. Do not start installation of any insulation until building structure and interior is dried out and that moisture condensation within the insulation or on interior side of exterior sheathing does not occur.

2. Perform moisture testing on building structure / materials to confirm moisture content.

C. Confirm that plumbing pipes located in insulated spaces allow for installation of insulation on exterior side of pipe.

D. Start of insulation installation indicates approval of substrates, environmental and installation conditions, plumbing pipe installation and proper moisture content of building structure and materials.

3.03 INSTALLATION – THERMAL BATT INSULATION

A. Install insulation in accordance with manufacturer's instructions. Friction fit in cavities and spaces to prevent displacement or sagging.

B. Insulate the entire perimeter of the building exterior without gaps or voids. Do not compress insulation.

C. Where wall framing is deeper than the insulation, place the batt tight to the exterior wall sheathing (leaving a void space on the interior, warm side of the batt).

1. Provide supplemental insulation support with wires as required by the insulation manufacturer.

D. Trim insulation neatly to fit spaces. Insulate miscellaneous cavities, gaps and voids.

E. Fit insulation to the exterior side of mechanical and electrical services within the plane of the insulation. Leave no gaps or voids.

1. Where mechanical piping will not allow installation of insulation to the exterior side and prevent freezing, report condition to Division 22 installer for correction before insulating or closing up the space.

3.04 INSTALLATION – SOUND INSULATION

A. Install insulation in accordance with manufacturer's instructions. Friction fit in cavities and spaces to prevent displacement or sagging.

B. Insulate the entire width / height of the wall / floor assembly without gaps or voids. Do not compress insulation.

C. Trim insulation neatly to fit spaces. Insulate miscellaneous cavities, gaps and voids.

D. Coordinate and monitor installation during GWB installation so as to prevent displacement or removal of batts.

3.05 INSTALLATION – RIGID FOAM INSULATION BOARD

A. Install rigid foam insulation at locations shown on Drawings, with the minimum number of joints possible and joints fitted tight free of cracks and voids.

B. Butt edges and ends tight to adjacent boards.

C. Cut insulation tight to adjacent surfaces and to utilities penetrating insulation.

D. Concrete Walls:

1. Adhere insulation boards to concrete substrate securely using manufacturer's recommended adhesive.

E. Exterior Wood Headers:

1. Adhere insulation boards to wood substrate securely using manufacturer's recommended adhesive.

2. Apply continuous bead of adhesive to joints between insulation boards as they are laid up to provide an airtight joint.

3. Do not permit insulation board to become wet.

3.06 INSTALLATION – SMART VAPOR RETARDER

A. Smart Vapor Retarder: Install smart vapor retarder sheet membrane in a continuous unbroken sheet over thermal batt insulation in conformance with manufacturer's installation instructions with fewest seams possible.

1. Lap vertical ends of vapor retarder over framing members 3-inches minimum.

2. Seal vapor retarder sheet airtight with tape, sealant or sealing grommets as recommended by manufacturer wherever penetrated by walls, beams, truss web members, pipes, ducts or electrical conduit / cables.

3. If horizontal side seams are required due to height of the wall, lap 3-inches minimum and seal edge continuously with tape.

4. Run vapor retarder sheet over electrical outlet boxes and other openings; cut out after installation and seal to box with tape for airtight fit.

5. Tape seal tears or cuts in vapor retarder sheet using tape as recommended by manufacturer to achieve a continuous unbroken vapor retarder sheet.

3.07 PROTECTION OF FINISHED WORK

A. Do not permit installed insulation to be damaged prior to its concealment.

3.08 FIELD QUALITY CONTROL

A. Contractor Quality Control: Employ / assign quality control personnel to monitor the work of this section for conformance to the requirements of the Contract Documents and to good construction practices.

1. Contractor is solely responsible for managing and controlling the quality of the work and conformance with the requirements of the Contract Documents.

END OF SECTION

SECTION 07 2700

BUILDING AIR BARRIER REQUIREMENTS

PART 1 GENERAL

1.01 RELATED DOCUMENTS

A. Drawings and general provisions of the Contract, including General Conditions, Supplementary Conditions and Divisions 00 and 01 Specification Sections, apply to work of this section.

1.02 SECTION INCLUDES

A. Performance Requirements for Building Air Barrier System (ABS).

B. Administration and Coordination of Building Air Barrier System (ABS) Installation.

C. Requirements for Testing Building Enclosure Air Leakage Rate.

1.03 SCOPE OF WORK

A. Provide administrative and procedural oversight for accomplishing an airtight building enclosure that controls infiltration or exfiltration of air between the conditioned interior building atmosphere and the exterior atmosphere.

1. The completed building air barrier and air leakage rate shall conform to the International Energy Conservation Code (ICC (IECC)) and / or the Washington State Energy Code (WSEC), whichever is more stringent.

2. The airtight components of the building enclosure and the joints, junctures and transitions between materials, products and assemblies forming the airtightness of the building enclosure are called the Air Barrier System (ABS).

3. Provide coordination between the trades, the proper scheduling and sequencing of the work, preconstruction meetings, inspections, tests and related actions, including reports performed by Contractor, by independent agencies and by governing authorities.

B. Ensure that the intent of constructing the building enclosure with a continuous air barrier system to control air leakage into, or out of the conditioned space is achieved. The air barrier system shall have the following characteristics:

1. Continuous, with joints sealed.

2. Structurally supported to withstand positive and negative air pressures applied to the building enclosure.

3. Connection shall be made between:

a. Foundation and floors.

b. Foundation and walls.

c. Walls and roof.

d. Walls and windows, doors and louvers.

e. Walls, floors and roof to utility, pipe and duct penetrations.

4. Air Barrier Penetrations: Penetrations of the air barrier and paths of air infiltration / exfiltration shall be sealed.

C. Third party inspection and testing services performed by others on the ABS do not relieve Contractor of responsibility for compliance with Contract Document requirements.

D. Requirements of this section relate to the coordination between subcontractors required to provide an airtight building enclosure, including:

1. Continuity of the air barrier materials and products with joints to provide systems or assemblies to provide a whole building air barrier system.

2. Specific quality-control requirements for individual construction activities are specified in the sections of the specifications. Ensure that each installer is adequately and satisfactorily performing the quality assurance documentation, tests and procedures required by each section.

3. Specified inspections, tests and related actions do not relieve the Contractor of responsibility for providing quality-control procedures that facilitate compliance with Contract Document requirements.

1.04 BUILDING AIR BARRIER SYSTEM (ABS) PERFORMANCE REQUIREMENTS

A. Furnish and install the various different types of air barriers shown and specified to create an Air Barrier System (ABS) in locations shown on the Drawings, constructed to perform as a continuous barrier that will remain in place and durable for the life of the building and conform to the following:

1. Materials: Materials used for the air barrier system shall have an air permeance not to exceed 0.004 cfm / ft^2 under a pressure differential of 0.3 inches water (1.57psf) when tested in accordance with ASTM E2178.

2. Assemblies of Materials and Components (Air Barrier System): Shall have an air permeance not to exceed 0.04 cfm / ft^2 under a pressure differential of 0.3 inches water (1.57 psf) when tested in accordance with ASTM E2357.

3. Whole Building: The air leakage of the entire building shall not exceed 0.25 cfm / ft^2 under a pressure differential of 0.3 inches water (1.57 psf) when tested according to ASTM E779.

B. Energy Code: Conform to the requirements of the International Energy Conservation Code and Sections C402.5.1 through C402.5.8 of the Washington State Energy Code. Project shall conform to the most stringent requirements of the two codes.

C. The installed building ABS shall conform to the following requirements:

1. ABS must be continuous, with joints made airtight and watertight.

2. Structural Integrity: ABS shall be capable of withstanding positive and negative combined design wind, fan and stack pressures on the envelope without damage or displacement, and shall transfer the load to the structure.

3. ABS shall not displace adjacent materials under full load.

4. ABS shall be joined in an airtight, watertight and flexible manner to the air barrier material of adjacent systems, allowing for the relative movement of systems due to thermal and moisture variations and creep.

5. ABS shall accommodate changes in substrate and perimeter sealing conditions.

6. Different air barrier products shall be permanently joined together where they meet in a manner approved by both manufacturers to provide an airtight juncture.

D. ABS shall accommodate movements of building materials by providing for airtight barrier across building expansion and control joints.

1.05 REFERENCES

A. References shall be the edition current as of the date of the Contract Documents.

B. ASTM E779 - Standard Test Method for Determining Air Leakage Rate by Fan Pressurization.

C. ASTM E2178 - Standard Test Method for Determining Air Leakage Rate and Calculation of Air Permeance of Building Materials.

D. ASTM E2357 - Standard Test Method for Determining Air Leakage Rate of Air Barrier Assemblies.

E. ICC (IECC) - International Energy Conservation Code.

F. WSEC - Washington State Energy Code.

1.06 DEFINITIONS

A. Air Barrier System (ABS): Materials, methods and expertise required to provide an air barrier in the completed building enclosure conforming to the Performance Requirements specified in this section.

B. Airtight: Air barrier materials, assemblies and whole building systems having an air permeance / leakage rate that conforms to the Performance Requirements specified in this section.

1.07 QUALITY ASSURANCE

A. Installer Qualifications: Installers shall be trained and knowledgeable in the proper application of the air barrier materials, assemblies and systems specified and be approved to apply the air barrier system by the assembly / system manufacturer where applicable.

B. Installer shall be capable of responsible, independent action and of determining the proper solution for each different air barrier detail / condition found on this project and not be reliant on outside direction in order to proceed with the work.

1.08 MOCK-UPS

A. Field-Constructed Mock-Ups: Prior to start of Air Barrier System installation, mock-up a representative sample of each different Air Barrier System condition required for this project; use materials and installation methods / sequence shown in the shop drawings and that will be employed in the actual construction of the building.

B. Apply air barrier on field-constructed mock-ups of assemblies specified in other sections.

C. Mock-up may be part of the permanent construction, select representative locations for mock-up of air barrier system at each different location / condition found on the project, including the following:

1. Connection between exterior wall and foundation.

2. Framed wall sheet-applied air and water barrier system.

3. Self-adhered sheet-applied air and vapor barrier system at roof deck.

4. Connection between framed wall and roof air barrier systems.

5. Connection between wall and windows, louvers, door frames.

6. Typical penetrations by structural members, conduits, electrical boxes, pipes and ducts.

D. The mock-up shall demonstrate the proper installation sequence and workmanship required for the Air Barrier System installation to provide an airtight envelope conforming to the Performance Requirements specified in this section.

E. Notify manufacturer’s field service representative, Architect and Owner Representative when mock-ups are complete.

F. Correct any non-conforming work; mock-ups conforming to requirements of Contract Documents shall become the standard of quality and construction for subsequent similar conditions.

G. Maintain mock-up in good condition and protected from damage throughout the entire project until the air infiltration testing has been successfully concluded on the completed building. Dismantle and remove mock-ups from the site.

1.09 PRE-INSTALLATION CONFERENCE

A. Pre-Installation Conference: Fourteen (14) days prior to starting installation of the ABS, convene a pre-installation conference at the job site to review the project conditions and installation requirements.

B. Required Attendees: Contractor, Installer Foreman, system(s) manufacturer representative(s), other trades with work that interfaces with or affects the air barrier system, Architect, and Owner's Representative.

1. Attendance is required by installers of each of the various different air barriers specified and representatives of related trades including covering materials, substrate materials and adjacent materials.

2. The manufacturer’s technical representative for each different Air Barrier System specified shall attend the pre-installation conference and shall provide the following:

a. Inspect and approve (along with the installer) the mock-up and the substrate(s) to which the ABS will be installed.

b. Review and explain each air barrier system product, including its limitations, the required surface preparation, the environmental requirements and the installation instructions / procedures and requirements for each different substrate and air barrier product.

C. Agenda shall include, at a minimum a review of the following:

1. Construction of the mock-ups.

2. Sequence of construction.

3. Substrate condition / preparation.

4. Materials approved for use.

5. Compatibility of materials.

6. Joints between the various different types of air barriers specified.

7. Coordination with the installation of adjacent and covering materials.

8. Details of construction.

1.10 PRE-TESTING CONFERENCE

A. Pre-Testing Conference: Seven (7) days prior to the whole building air leakage test, convene a pre-testing conference at the job site to review the project conditions and installation requirements. Attendees shall include the Contractor, Testing Agency, Architect, Owner, and Owner's Representative.

1.11 CONTRACTOR RESPONSIBILITY

A. Coordinate the construction of an ABS that is contiguous and connected across the six (6) surfaces of the building envelope (top, sides and bottom) meeting the Performance Requirements as outlined in this specification.

1. Provide coordination of the trades and the sequence of construction to ensure continuity of the air barrier system joints, junctures and transitions between materials and assemblies of materials and products, from substructure to walls to roof.

2. Provide quality assurance procedures, testing and verification as specified herein.

3. Facilitate inspections, tests and other quality-control services specified elsewhere in the Contract Documents and required by authorities having jurisdiction or by the Owner.

B. Organize and conduct pre-installation meetings between the trades installing the building air barrier system to discuss where each trade begins and ends, and the responsibility and sequence of installation of the airtight joints, junctures and transitions between materials, products and assemblies of products, specified in the different sections to be installed by the different trades.

C. Coordinate the construction of mock-ups prior to start of air barrier work showing the various different air barrier materials, systems and how they are connected to form an ABS for the whole building.

D. Cooperate with Owner’s testing and inspection agency performing required inspections, tests and similar services, and provide reasonable auxiliary services as requested.

1. The Contractor is responsible for scheduling times for inspections, tests, taking samples and similar activities; testing shall occur during normal working hours during the work week, no weekend, holiday or night testing permitted.

2. Provide minimum twenty-one (21) days advance notice to Owner’s testing and inspection agency for date on which test is required.

3. Coordinate activities to avoid the necessity of removing and replacing construction to accommodate inspections and tests.

4. Notify the agency sufficiently in advance of operations to permit assignment of personnel.

5. Provide safe access to the Work including ladders, scaffolding or manlifts.

6. Furnish incidental labor and facilities necessary to facilitate inspections and tests.

7. Provide security and protection of samples and test equipment at the Project Site.

E. Whole Building Air Leakage Test: Schedule the air leakage test of the building after the building is 100% complete and just prior to Substantial Completion, coordinate times with the Owner's testing agency. Provide the following:

1. Schedule test to avoid wet or windy weather conditions which would adversely affect or conflict with the testing standards requirements.

2. Assign management personnel to be in attendance during the entire air leakage test and to assist testing agency with keys for access, knowledge of the as-built construction and operation of building systems.

3. No construction workers shall be allowed inside the building during testing.

4. Close and lock exterior doors.

5. Shut down HVAC, exhaust systems and gas / oil-fired heating equipment when directed by Owner's testing agency; restart systems and confirm proper operation after test is completed.

6. Temporarily seal exterior HVAC openings airtight using heavy plastic sheeting and tape; remove after test is completed.

7. Temporarily seal exterior exhaust openings airtight using heavy plastic sheeting and tape; remove after test is completed.

8. Temporarily seal exterior gas vents and chimneys airtight using heavy plastic sheeting and tape; remove after test is completed.

9. Block interior doors open.

10. Fill plumbing traps with water.

11. Provide one 120 volt, 20 amp electrical circuit with non-GFI electrical outlets for each test fans; one circuit per fan with no other loads on circuit during testing.

12. Provide ladders for use by Owner's testing agency during testing.

1.12 TESTING AND INSPECTION AGENCY RESPONSIBILITY

A. Duties of the Testing and Inspection Agency: The Owner's testing agency engaged to perform inspections, sampling and testing of air barrier materials, components and assemblies specified in individual sections shall cooperate with the Contractor in performance of the agency's duties. The testing agency shall provide qualified personnel to perform required inspections and tests.

1. The agency shall notify the Architect and the Contractor promptly of irregularities or deficiencies observed in the Work during performance of its services.

2. The agency is not authorized to release, revoke, alter, or enlarge requirements of the Contract Documents or approve or accept any portion of the Work.

3. The agency shall not perform any duties of the Contractor.

B. Testing and inspection agency shall provide a test report that includes the tested surface area, floor area, air by volume, stories above grade, and leakage rates.

1. Test report shall be included final documentation submitted to Owner.

2. A copy of the test report shall be provided to the Building Official.

PART 2 PRODUCTS

2.01 BUILDING AIR BARRIER SYSTEM

A. Floor Air Barrier: Air barrier is the concrete floor slab on grade specified in Section 03 3001.

B. Framed Exterior Walls: Air barrier system is the sheet-applied air and water barrier system specified in Section 07 2719.

C. Roof Air Barrier: Air barrier system is the self-adhered, sheet-applied air / vapor barrier specified in Section 07 4000

D. Window and Door Air Barrier: Specified in Section 07 9000, Section 08 1100, Section 08 3613, Section 08 4113, and Section 08 4115.

E. Gaps and Voids Filler: Spray foam sealant specified in Section 07 9000.

PART 3 EXECUTION

3.01 COORDINATION

A. Review, coordinate and accommodate work of other trades that interface with, affect or are affected by the work of this section so as to facilitate the execution of the overall Work of this project in a coordinated and efficient manner.

B. Make minor revisions not affecting function, performance or architectural appearance so that other trades can complete their work without delay or unreasonable hardship.

3.02 REPAIR AND PROTECTION

A. Take measures to protect the air barrier system from damage during construction.

B. Damaged air barriers shall be repaired as recommended by manufacturer prior to cover.

C. After completion of the building and upon completion of inspection and testing restore / repair any removed / damaged construction caused by finding and repairing leaks in the air barrier system and restore substrates, insulation and finishes to their original condition.

3.03 FIELD QUALITY CONTROL

A. Contractor Quality Control: Employ / assign quality control personnel to monitor the work of this section for conformance to the requirements of the Contract Documents and to good construction practices.

1. Contractor is solely responsible for managing and controlling the quality of the work and conformance with the requirements of the Contract Documents.

B. Inspect the Building Air Barrier System work as it progresses for conformance with the Contract Documents.

C. Review the Building Air Barrier System installation in progress on a daily basis and confirm the following:

1. Air barrier manufacturer's surface preparation and installation instructions are being followed.

2. Continuity of the air barrier system over the entire building with no gaps and penetrations are sealed allowing for no air infiltration or exfiltration through the air barrier system.

3. Air barrier substrates are continuous and will structurally support the air barrier system to withstand design air pressures.

4. Ensure concrete surfaces are smooth, clean and free of cavities.

5. Substrate surfaces are properly primed as recommended by manufacturer.

6. Laps in materials conform to manufacturer's instructions and in no case are less than 3-inches and are shingle-lapped to shed water to exterior side.

7. Manufacturer recommended transitions are being employed for changes in direction and structural support at cracks and gaps.

8. Review connection between assemblies (membrane and sealants) for proper cleaning, preparation and priming of surfaces, structural support, integrity and continuity of seal.

9. Air barrier system is not exposed to the weather longer than recommended by the barrier manufacturer.

D. Owner's Testing and Inspection Agency Audits: Cooperate with Owner's testing agency. Provide written notification to Owner's testing agency at least three (3) weeks in advance of air leakage test schedule.

E. Building Air Leakage Test: Upon completion of the building, the Owner's testing agency will perform a whole building air leakage test on the completed building to confirm the air leakage rate does not exceed 0.25 cfm / ft^2 in conformance with the requirements in the International Energy Conservation Code and the Washington State Energy Code.

1. The building will be subjected to air leakage testing using high-capacity orifice blower door fans capable of producing positive and negative air pressure throughout the building.

2. The Owner shall schedule and pay for one test. If the initial testing indicates that the building air leakage rate exceeds the 0.25 cfm / ft^2 remediation and additional tests are required at the Contractor's expense.

3.04 CORRECTION OF DEFICIENCIES

A. The International Energy Conservation Code requires that if the initial test fails to achieve the required building air leakage rate, repairs shall be made to the air barrier of the building and the entire building shall be re-tested for compliance with the air leakage rate specified below.

1. If the air leakage test is failed, locate air leakage areas, remove any materials required to gain access to leak areas, seal the air leaks, coordinate additional air leakage testing with Owner's testing agency and replace / install any materials removed for gaining access to air leakage areas all as required to achieve the required building air leakage rate.

2. If the initial test does not pass the code required performance requirements, the Contractor shall be responsible for paying for any and all additional air leakage rate tests.

3. The re-test shall be required to pass a maximum air leakage rate of 0.40 cfm / ft^2.

4. If the building does not pass the re-test at an air leakage rate of 0.40 cfm / ft^2, repairs shall be made again, and the building shall be tested again. The repairing and re-testing shall be done until the building passes the air leakage test with a maximum air leakage rate of 0.40 cfm / ft^2.

END OF SECTION

SECTION 07 2719

SELF-ADHERED SHEET-APPLIED AIR AND WATER BARRIER SYSTEM

PART 1 GENERAL

1.01 RELATED DOCUMENTS

A. Drawings and general provisions of the Contract, including General Conditions, Supplementary Conditions and Divisions 00 and 01 Specification Sections, apply to work of this section.

1.02 SECTION INCLUDES

A. Self-Adhered Sheet-Applied Air and Water Barrier System.

B. Spray Foam (Where Shown on Drawings).

1.03 SYSTEM REQUIREMENTS

A. Provide a complete and fully functional sheet-applied, vapor permeable air and water barrier system conforming to the manufacturer's recommended details for each condition on this project and the Performance Requirements specified herein.

1. The manufacturer is responsible for providing the technical design and details of the System as required to provide a completely integrated airtight and watertight secondary barrier system that accommodates the building materials, conditions and work by other trades.

2. The component materials shown in the manufacturer's recommended system details are the minimum requirement for the similar conditions found on this project whether shown on the Drawings or not.

3. Provide additional materials and conform to special installation requirements as detailed on the Drawings where they modify, expand on, add to or exceed the manufacturer's minimum recommended system details.

4. Where any detail on the Drawings differs with manufacturer's standard published details, consult with the Architect regarding possible special requirements that require manufacturer's review and approval.

1.04 PERFORMANCE REQUIREMENTS

A. Performance Requirements: Refer to Section 07 2700 and the following:

1. Provide an Air and Water Barrier System constructed to perform as a continuous air barrier and as a liquid water drainage plane flashed to discharge to the exterior any incidental condensation or water penetration.

    a. Air and Water Barrier System shall accommodate movement of the building materials used on this project by providing for airtight barrier across joints.

    b. Air and Water Barrier System shall accommodate changes in substrate and perimeter sealing conditions.

2. Air and Water Barrier System shall conform to the following requirements:

    a. Continuous System: The System must be continuous, with joints and penetrations made airtight and watertight.

    b. Water (Liquid) Leakage: No visible liquid water leakage when tested per ASTM E331; System shall perform as a liquid water drainage plane flashed to discharge any incidental condensation or water penetration to the exterior.

    c. Vapor Permeable: The System shall be vapor permeable with a water vapor transmission rate of more than 50 perms when tested in accordance with ASTM E96/E96M Method B.

    d. Provide materials and installation methods to bridge across and provide an airtight and watertight connection / seal conforming to the Performance Requirements specified above at the following locations:

        1) Between the wall air barriers and the concrete foundation.

        2) Between wall air barriers and windows, doors, and louvers.

        3) Between the wall air barriers and any penetrations (such as piping, conduit, electrical boxes, ducts, structural members and similar).

        4) Penetrations of air and water barrier at veneer ties, screws, bolts, and similar conditions.

1.05 REFERENCES

A. References shall be the edition current as of the date of the Contract Documents.

B. AATCC Test Method 127 - Test Method for Water Resistance: Hydrostatic Pressure.

C. ASTM D882 - Standard Test Method for Tensile Properties of Thin Plastic Sheeting.

D. ASTM E84 - Standard Test Method for Surface Burning Characteristics of Building Materials.

E. ASTM E96/E96M - Standard Test Methods for Gravimetric Determination of Water Vapor Transmission Rate of Materials.

F. ASTM E331 - Standard Test Method for Water Penetration of Exterior Windows, Skylights, Doors, and Curtain Walls by Uniform Static Air Pressure Difference.

G. ASTM E2178 - Standard Test Method for Determining Air Leakage Rate and Calculation of Air Permeance of Building Materials.

H. ASTM E2357 - Standard Test Method for Determining Air Leakage Rate of Air Barrier Assemblies.

I. ICC - International Code Council.

1.06 SUBMITTALS

A. Refer to Section 01 3300 for submittal procedures.

B. Product Data: Submit product data for each component of the sheet-applied air and water barrier system.

C. Detail Drawings:

1. Submit manufacturer’s standard published detail drawings proposed for each condition and material found on the project.

2. Any special details required but not included in manufacturer’s standard published details shall be accompanied by a letter of approval from manufacturer’s technical department.

D. Installer Approval: Submit document stating manufacturer's acceptance of subcontractor as an Approved Applicator for the specified materials, letter shall be dated within 45 days of submission date.

E. Warranty Authorization: Submit evidence from manufacturer that project is approved for warranty coverage.

F. Closeout Submittal: Submit manufacturer’s executed warranty form with authorized signatures and endorsements indicating date of Substantial Completion.

1.07 DEFINITIONS

A. Air and Water Barrier System: A continuous secondary barrier installed behind the primary exterior cladding / siding that provides an air and liquid water barrier that reduces air leakage through the building exterior envelope to a defined level and prevents the passage of liquid water to the interior side of the barrier system at any point, including penetrations and interfaces between different materials and systems.

B. Airtight: Installed barrier system having an air permeability rating that conforms to the Performance Requirements specified in this section and in Section 07 2700 that are installed so that the total building exterior envelope does not exceed the air leakage rate specified in Section 07 2700 .

C. Watertight: Installed barrier system able to withstand exposure to continuous wind-driven rainfall concurrent with the positive and negative wind pressures acting on the barrier resulting from the building size and geographic location without allowing leakage of any water to the interior side of the barrier system at any location, penetration or connection.

1.08 QUALITY ASSURANCE

A. Installer: Installer shall have a minimum of five (5) years of experience with the installation of air and water barrier systems and have a thorough understanding of the theory and practical application of secondary barrier systems in exterior cladding / siding applications.

B. Installation: Installation shall be in accordance with System manufacturer's installation guidelines and recommendations.

C. Source Limitations: Sheet-applied air and water barrier system components shall be produced or approved by single manufacturer.

1.09 MOCK-UP

A. Provide mock-up as specified in Section 07 2700 and per the following requirements:

1. Mock-Up: Install a job mock-up at project site matching the siding / cladding and sheet-applied air and water barrier systems proposed for this project.

   a. Mock-up may be part of the building exterior wall, provided that the installation is acceptable, and shall contain all of the typical details.

   b. Notify sheet-applied air and water barrier system manufacturer's designated field service representative, Architect, and Owner when mock-up is complete and ready for review.

   c. Allow ten (10) working days for review of mock-up before proceeding with work.

   d. When accepted, mock-up will demonstrate minimum standard of quality required for this work. Replace any portion of the mock-up that is found to contain poor workmanship, or is not in conformance with the manufacturer's installation requirements, with the design intent or with the requirements of this section.

e. Maintenance: Maintain mock–up during construction for workmanship comparison; remove and legally dispose of mock-up when no longer required. Do not remove mock-up without Architect's approval.

1.10 PRE-INSTALLATION CONFERENCE

A. Prior to start of sheet-applied air and water barrier system installation, Contractor shall schedule a pre-installation conference at the job site to review the project conditions and installation requirements as specified in Section 07 2700 and per the following requirements:

1. Review the following:

a. Project requirements and submittals.

b. Installer's training requirements.

c. Substrate work and preparation.

d. Areas of potential conflict and interface.

e. Availability of sheet-applied air and water barrier materials and components.

f. Equipment.

g. Facilities and scaffolding.

h. Methods, procedures and sequencing requirements for full and proper installation, integration and protection.

i. Mock-up.

B. Persons attending pre-installation conference shall include the Contractor, sheet-applied air and water barrier installer, sheet-applied air and water barrier system manufacturer's designated field service representative, Architect, and Owner.

1.11 DELIVERY, STORAGE AND PROTECTION

A. Deliver barrier system materials and components in manufacturer's original, unopened, undamaged containers with identification labels intact.

B. Store barrier system materials as recommended by barrier manufacturers.

1.12 SCHEDULING

A. Review requirements for sequencing of installation of sheet-applied air and water barrier systems with installation of windows, doors, lights, louvers, flashings, and work of other trades to provide an airtight and watertight barrier assembly.

B. Schedule installation of sheet-applied air and water barrier system and exterior siding / cladding so that the exterior sheathing and sheet-applied air and water barrier system are not left exposed to the weather longer than recommended by the manufacturer(s).

1.13 GUARANTEE / WARRANTY

A. Contractor Guarantee: Contractor shall guarantee the application of the sheet-applied air and water barrier system to be free from improper installation or workmanship and to remain leak-free for a period of five (5) years and agrees to correct any leaking sheet-applied air and water barrier during the warranty period promptly after notification and at no cost to the Owner, including removal and replacement of any cladding materials necessary to gain access.

B. Manufacturer Warranty: Manufacturer agrees to promptly replace defective sheet-applied air and water barrier system materials for a period of ten (10) years at no cost to the Owner.

1. Approval by System manufacturer for warranty is required prior to System installation.

2. Warranty Areas: Areas shown on Drawings to receive sheet-applied air and water barrier system shall be included in the warranty.

PART 2 PRODUCTS

2.01 SELF-ADHERED SHEET-APPLIED AIR AND WATER BARRIER SYSTEM

A. Manufacturer / Product: VaproShield LLC, *WrapShield SA Self-Adhered Water-Resistive Vapor Permeable Air Barrier Sheet* used in conjunction with *VaproShield VaproLiqui-Flash* is the basis of design and the standard of quality, function and performance required for this project.

1. VaproShield LLC; *WrapShield SA Self-Adhered Water-Resistive Vapor Permeable Air Barrier Sheet* used in conjunction with VaproShield VaproLiqui-Flash (specified, basis of design).

2. Products by the following manufacturers may be acceptable, subject to their ability to meet or exceed this standard and provide products conforming with the requirements of the Drawings and this Specification:

a. Carlisle; *CCW-705 VP* used in conjunction with *Carlisle Barrithane VP.*

b. Henry; *VP 160* used in conjunction with *Henry Air-Bloc LF*.

c. Soprema; *Sopraseal Stick VP* used in conjunction with *Soprema Sopraseal Sealant.*

d. WR Meadows; *Air-Shield SMP* used in conjunction with *WR Meadows Air-Shield Liquid Flashing*.

3. Substitutions: Refer to Section 01 6000 for substitution procedures and requirements. Proposed substitutions must match specified product performance.

B. General: Provide components and accessories required for a complete and functional airtight and watertight sheet-applied air and water barrier system supplied by a single manufacturer, complete with manufacturer designed installation details for each condition found on the project.

C. Self-Adhered Air and Water Barrier Sheet (At Closed Joint Cladding System): Self-adhered air and water barrier sheet membrane consisting of multiple layers of UV stabilized spun-bonded polypropylene with the following performance characteristics:

1. Exposure Prior To Cover: 180 days maximum.

2. Air Leakage: <0.01 cfm / sq. ft. when tested in accordance with ASTM E2357 and < 0.0000263 cfm / sq. ft. @ 75 Pa when tested in accordance with ASTM E2178.

3. Water Vapor Permeance: 50 perms when tested to ASTM E96/E96M (Water Method B).

4. Water Resistance tested to AATCC Test Method 127, 550 mm hydrostatic head for 5 hours: No leakage.

5. Tensile Strength tested to ASTM D882: 44.8 lbf / inch, machine direction; 25 lbf / inch, cross-machine direction.

6. Application Temperature: Ambient temperature must be above 20 degrees F.

7. Surface Burning Characteristics tested to ASTM E84: Class A, Flame-spread index of less than 10, Smoke-development index of less than 15.

8. Physical Dimensions: 0.026-inches thick and 59-inches wide and 8.26 oz. per sq. yd.

D. Accessory Products: Provide the following products manufactured by the basis of design manufacturer; provide products recommended by manufacturer for specific substrate materials and condition:

1. Liquid-Applied Opening Flashing for Doors, Windows, Louvers, and Other Penetrations: Liquid-applied waterproof flashing material applied over self-adhered flashing.

a. Liquid-Applied Flashing: Moisture cured, STPE elastomeric sealant, trowel-applied, over self-adhered flashing.

1) Product: *VaproLiqui-Flash.*

b. Self-Adhered Flashing Membrane: Membrane shall be a zero VOC self-adhered water-resistive vapor permeable membrane.

1) Product: *VaproFlashing SA.*

c. Sealant: Moisture cured, STPE elastomeric, or sealant as recommended by system manufacturer.

1) Product: *VaproLiqui-Flash.*

2. Self-Adhered Transition and Flashing Membrane: Membrane shall be a zero VOC self-adhered water-resistive vapor permeable membrane having the following properties:

a. Product: *VaproFlashing SA.*

b. Size(s): 11-3/4-inches or 19-inches wide x 164 feet long.

c. Air Leakage: < 0.0000263 cfm / sq. ft. @ 75 Pa when tested in accordance with ASTM E2178.

d. Water Vapor Permeance tested to ASTM E96/E96M Method B: 50 perms.

e. Water Resistance tested to AATCC Test Method 127, 550 mm hydrostatic head for 5 hours: No leakage.

3. Adhesive Primers: As recommended by air and water barrier system manufacturer for substrate and temperature conditions.

4. Penetration and Termination Sealant: As recommended by air and water barrier system manufacturer for substrate and temperature conditions.

E. Plastic Rainscreen Batten and Ventilation Accessories: Provide the following products manufactured by the basis of design manufacturer:

1. Plastic Batten: 1/2-inch thick black vinyl extrusion with preformed fastener and moisture drainage channels configured to create a ventilated air space between wall cladding and air and water barrier system.

a. Product: *VaproBatten.*

2. Vent Strips: Strips to allow air ventilation at bottom and top of vent space and keep insects out.

a. Products: *VaproVent L Strip* and *VaproVent Hook Strip.*

F. Sheet Metal Flashing: Specified in Section 07 6200.

G. Spray Foam: Polyurethane foam sealant which expands to take the shape of cracks and voids and permanently seals to substrate surfaces.

1. Code Approval: ICC Evaluation Service, Inc. ES Report ESR-2717.

2. Fire Performance:

   a. Flame Spread Index Per ASTM E84: 20 or less

   b. Smoke Developed Index Per ASTM E84: 400 or less

3. Manufacturer / Product: Fomo Products, *Handi-Foam E84 Class 1(A)* is the basis of design and the standard of quality, function and performance required for this project.

   a. Fomo Products; *Handi-Foam E84 Class 1(A)* (specified, basis of design).

   b. Products by other manufacturers may be acceptable, subject to their ability to meet or exceed this standard and provide products conforming with the requirements of the Drawings and this Specification.

   c. Substitutions: Refer to Section 01 6000 for substitution procedures and requirements. Proposed substitutions must match specified product performance.

PART 3 EXECUTION

3.01 COORDINATION

A. Review, coordinate and accommodate work of other trades that interface with, affect or are affected by the work of this section so as to facilitate the execution of the overall Work of this project in a coordinated and efficient manner.

B. Coordinate the installation of the sheet-applied air and water barrier system with the installation of other air barrier systems; refer to requirements of Section 07 2700.

C. Coordinate the installation of the sheet-applied air and water barrier system and sheet metal flashings specified in Section 07 6200 and the exterior siding / cladding so that the exterior sheathing and the sheet-applied air and water barrier system are not left exposed to the weather longer than recommended by the manufacturer(s).

D. Coordinate fabrication and installation of sheet metal flashings with Section 07 6200 as required to achieve a weathertight assembly. Do not install cladding / siding until the flashings have been properly installed.

E. Coordinate furring batten layout to properly support fiber cement siding specified in Section 07 4649.

3.02 EXAMINATION

A. Verify that substrates are ready to receive work.

B. Beginning of installation indicates acceptance of substrate and conditions.

3.03 PREPARATION

A. Substrates shall be clean, dry, and uniform and smooth prior to flashing application. Remove protrusions and fill voids at substrates as necessary. Ensure fastener heads are set flush with substrate surfaces.

B. Allow wet substrates to dry thoroughly. Clean dust and debris from substrates. Wipe metal surfaces with films or coatings interfering with adhesion clean.

C. Prime substrates according to manufacturer's recommendations.

D. Provide solid continuous backing or substrate filler to support portions of liquid-applied flashing and self-adhering flashing.

E. Air and substrate surface temperatures for flexible flashing shall be as recommended by manufacturer.

3.04 INSTALLATION – SELF-ADHERED SHEET-APPLIED AIR AND WATER BARRIER SYSTEM

A. General: The sheet-applied, self-adhering air and water barrier system is required to provide a completely airtight and watertight secondary barrier behind the exterior siding / cladding on this building.

1. Install air and water barrier system over surfaces of the exterior walls of the building in a weather-lapped, airtight and watertight manner and integrated with the sheet metal flashings around openings and penetrations.

2. Coordinate installation to coincide with siding / cladding installation so that the proper sequence of installation is achieved and so that the air and water barrier system is not left exposed to the weather.

3. Protect air and water barrier system from damage, repair any damaged areas for airtight and watertight installation.

B. Air and Water Barrier System: Install air and water barrier system in accordance with System manufacturer's installation instructions to achieve airtight and watertight assembly.

1. Install barrier sheet with minimum number of end laps possible.

2. Openings: Install liquid-applied opening flashing at perimeter of doors, windows, and louvers in exterior walls to provide an airtight and watertight seal between window, door or louver and the air and water barrier sheet.

3. Penetrations: Install liquid-applied opening flashing at perimeter of penetrations in exterior siding / cladding (such as electrical boxes, hose bibbs, pipes, exhaust ducts / louver assemblies, light fixtures, fire alarm devices, structural members, etc.) to provide an airtight and watertight seal between item penetrating and the barrier sheet.

4. Coordinate installation requirements at non-standard conditions with System manufacturer.

5. Pressure roll membrane surfaces, laps and flashings per manufacturer's installation instructions to ensure surface adhesion.

6. Protect barrier system from damage, repair any holes or tears before siding is installed.

7. Do not leave barrier system exposed to the weather, conform to manufacturer's recommendations. Replace any weather exposed or damaged barrier entirely, do not cut wrinkles.

8. Wall / Roof Air Barrier Connection: Where the top of wall air and water barrier system intersects overhanging roof condition continuously seal cracks, gaps and openings between the air and water barrier sheet and the structure (beams, trusses / joists, blocking, underside of roof deck, etc.) airtight using spray foam installed in conformance with manufacturer's installation instructions and ESR Report ESR-2717.

C. Rainscreen Plastic Battens:

1. Install specified battens in accordance with System manufacturer's installation instructions.

2. Install battens and ventilation strips under cladding systems.

3. Install horizontal ventilation strip at base of wall, vertical battens and top vent strip, securely into solid framing or backing. Install vertical battens in line with wall framing.

4. Coordinate spacing of battens and vent strips to accommodate siding / cladding system.

3.05 WORKMANSHIP

A. Barrier systems shall be installed using the best workmanship, including the following:

1. Barrier sheet installed without any wrinkles, holes, tears, rips or damage.

2. Edges weather-lapped properly and sealed airtight and watertight.

3. Barrier system not left exposed to weather beyond maximum exposure time recommended by manufacturer without being covered.

4. Self-adhered flashings tightly bonded to substrate surface.

5. Self-adhered flashings installed without winkles, puckers or misfit.

6. Barrier system installation forms an airtight and watertight secondary barrier, free of leaks.

7. Barrier system conforms to Performance Requirements specified herein.

B. Any part of the work of this section installed with improper or poor workmanship shall be removed and replaced at Contractor's expense.

3.06 PROTECTION AND CLEANING

A. Sheet-applied air and water barrier membranes are not designed for permanent exposure to sunlight and shall be covered as soon as possible, do not leave exposed longer than recommended by manufacturer.

B. Completely remove any dirt or contaminates that may have splashed onto air and water barrier before covering.

3.07 FIELD QUALITY CONTROL

A. Contractor Quality Control: Employ / assign quality control personnel to monitor the work of this section for conformance to the requirements of the Contract Documents and to good construction practices.

1. Contractor is solely responsible for managing and controlling the quality of the work and conformance with the requirements of the Contract Documents.

2. Notify manufacturer's designated representative and schedule required periodic site inspections of sheet-applied air and water barrier system installation.

B. Schedule of Contractor Performed Inspections:

1. Inspect installation of sheet-applied air and water barrier system just prior to cover and confirm that sheet-applied air and water barrier system is installed according to System manufacturer's recommendations and installation details and there are no penetrations or damage.

C. Manufacturer's Field Service:

1. Notify manufacturer's designated representative to obtain required periodic observations of air and water barrier system installation.

2. System Manufacturer's Authorized Field Service Representative shall inspect work in progress and completed work to ascertain that the System has been installed according to System manufacturer's recommendations and installation details.

D. Non-conforming work shall be corrected prior to cover.

E. Building Air Leakage Testing: The Owner's testing agency shall conduct a test of the building for airtightness as specified in Section 07 2700.

END OF SECTION

SECTION 07 4000

PREFORMED METAL PANEL SYSTEMS

PART 1 GENERAL

1.01 RELATED DOCUMENTS

A. Drawings and general provisions of the Contract, including General Conditions, Supplementary Conditions and Divisions 00 and 01 Specification Sections, apply to work of this section.

1.02 SECTION INCLUDES

A. Metal Roofing Panel System and Related Flashings / Trim.

1. Structural Engineering for Attachment.

2. Roof Air / Vapor Barrier.

3. Rigid Foam Insulation.

4. Underlayment.

B. Metal Wall Panel System and Related Flashings / Trim.

1.03 SYSTEM REQUIREMENTS

A. System Requirements: Provide complete and fully functional metal panel systems conforming to the specified manufacturer's recommended details and the Performance Requirements specified herein for each condition on this project.

1. The manufacturer is responsible for the proper functioning, performance and technical design shown in their recommended system details.

2. Each of the metal panel systems specified herein consists of component parts based on the specified manufacturer's recommended details for terminations, flashings, transitions, backing, furring, joints, fasteners, etc.

3. The component parts shown in the specified manufacturer's recommended details are the minimum requirement for the similar conditions found on this project whether shown on the Drawings or not.

4. Provide the components as detailed on the Drawings where they modify, expand on, add to or exceed the specified manufacturer's minimum recommended details.

5. Minor modifications made by the Architect during shop drawing review to the component parts of the metal panel system details are normal coordination and shall not result in any additional cost to the Owner.

1.04 PERFORMANCE REQUIREMENTS

A. Environmental Requirements:

1. Provide for expansion and contraction of system components due to changes in ambient temperature and solar heat gain. Accommodate movement due to temperature change without buckling, undue stress on structural elements, reduction of performance, or other damaging effects.

   a. Anticipated ambient temperature range: 0 degrees to plus 180 degrees F.

B. Structural Design for Metal Roof Panel System: Provide structural engineering design for the preformed metal panel systems and their connection to the building structure.

1. Engage the services of a qualified Professional Engineer, experienced in design of metal panel systems and currently registered in Washington State, to provide the structural engineering design.

2. Design in conformance with the following:

   a. Design Criteria listed for Snow and Wind on the Structural Drawing General Notes.

   b. International Building Code, including applicable referenced AISI specifications and standards, and State of Washington Building Code WAC 51-50.

   c. IBC Chapter 16 – Section 1609 and tested in accordance with UL 580 and ASTM E1592.

   d. Include design for drag load resistance on roofing panels.

3. Roofing System: Include design for attachment of roofing panels to resist drag forces from snow loads.

   a. Where metal roof panels are installed over exposed to view tongue and groove wood decking, select fastener sizes so that the fastener does not penetrate all the way through the exposed face of the decking. Fasteners shall not be seen where the tongue and groove wood decking is exposed to view on the bottom side.

C. Structural Performance for Metal Wall Panel System: Design framing supports configuration, size, spacing, and make adjustments as needed to accommodate support for each siding type, specified in this section and shown on Drawings.

1. Design in conformance with the following:

a. Dead and Live Loads: Conform to Code requirements and refer to the Structural General Notes.

b. Design Wind Speed: 85 mph.

c. International Building Code and State of Washington Building Code WAC 51-50.

d. IBC Chapter 16 – Section 1609 and tested in accordance with UL 580 and ASTM E1592.

e. Panel Deflection shall not exceed L / 240.

D. Work of Other Trades: Review and coordinate work of other trades that interface with or pass through the metal panel systems.

1. Make whatever provisions are necessary to the design, layout and fabrication of the metal panel systems to accommodate work by others.

E. Testing and Certification: Systems provided shall have been tested under the supervision of an accredited independent laboratory; the test reports shall be provided upon request.

1. Metal Roof Panel System Requirements:

a. Wind Uplift: As required by ASCE 7.

1) Tested in accordance with ASTM E1592.

2) Deflection limits under wind load not greater than 1/180 of the span.

3) UL 580 Class 90 rated.

b. Air Infiltration: Not exceeding 0.002 cfm per linear foot of joint at static test pressure differential of 12.00 psf when tested in accordance with ASTM E1680.

c. Water Infiltration Under Static Pressure: No leakage at 20 psf (minimum) pressure when tested with side lap sealant in accordance with ASTM E1646.

d. Water Penetration: No leakage through panel side seams and end laps after six hours when tested according to ASTM E2140 at a static water pressure head of 6.00 inches.

e. Fire Classification: Class A in conformance with IBC Section 1505.

1.05 REFERENCES

A. References shall be the edition current as of the date of the Contract Documents.

B. AISI - American Iron and Steel Institute.

C. ASCE 7 - Minimum Design Loads and Associated Criteria for Buildings and Other Structures.

D. ASTM A792/A792M - Standard Specification for Steel Sheet, 55% Aluminum-Zinc Alloy-Coated by the Hot-Dip Process.

E. ASTM C1289 - Standard Specification for Faced Rigid Cellular Polyisocyanurate Thermal Insulation Board.

F. ASTM D2244 - Standard Practice for Calculation of Color Tolerances and Color Differences from Instrumentally Measured Color Coordinates.

G. ASTM D4214 - Standard Test Methods for Evaluating the Degree of Chalking of Exterior Paint Films.

H. ASTM E1592 - Standard Test Method for Structural Performance of Sheet Metal Roof and Siding Systems by Uniform Static Air Pressure Difference.

I. ASTM E1646 - Standard Test Method for Water Penetration of Exterior Metal Roof Panel Systems by Uniform Static Air Pressure Difference.

J. ASTM E1680 - Standard Test Method for Rate of Air Leakage through Exterior Metal Roof Panel Systems.

K. ASTM E2140 - Standard Test Method for Water Penetration of Metal Roof Panel Systems by Static Water Pressure Head.

L. IBC - International Building Code.

M. ISO/IEC 17025 - General Requirements for the Competence of Testing and Calibration Laboratories.

N. SMACNA (ASMM) - Architectural Sheet Metal Manual.

O. UL 580 - Standard for Tests for Uplift Resistance of Roof Assemblies.

P. WAC 51-50 - Washington Administrative Code, State of Washington Building Code.

1.06 SUBMITTALS

A. Refer to Section 01 3300 for submittal procedures.

B. Product Data: Manufacturer's written technical information, including performance data, details, and installation recommendations, which demonstrate that metal panel assembly components comply with contract documents.

C. Shop Drawings – Preformed Metal Roof Panels: Submit shop drawings approved by metal panel manufacturer that comply with Drawings and Specifications and manufacturer’s design details.

1. Show plan view and arrangement of panels.

2. Detail perimeter and joint flashings.

3. Show spacing / layout of fastener clips for metal roof panels.

4. Detail rake edge, eave edge, roof / wall transition, fastener clips, etc.

5. Describe proposed details that deviate from what is shown on the Drawings.

6. Indicate thickness and dimensions of parts, fastenings and anchoring methods, details and locations of joints, transitions and other provisions necessary for thermal expansion and contraction.

7. Indicate locations of field and factory-applied sealant.

8. Shop Drawings shall be reviewed and approved in writing by metal panel manufacturer's technical department prior to submission to Architect.

D. Shop Drawings – Preformed Metal Wall Panels: Submit shop drawings approved by metal panel manufacturer that comply with Drawings and Specifications and manufacturer's recommended design details.

1. Show elevation view and arrangement of wall panels.

2. Detail perimeter and joint flashings.

3. Describe proposed details that deviate from what is shown on the Drawings.

4. Indicate thickness and dimensions of parts, fastenings and anchoring methods, details and locations of joints, transitions and other provisions necessary for thermal expansion and contraction.

5. Indicate locations of field and factory-applied sealant.

6. Shop Drawings shall be reviewed and approved in writing by metal panel manufacturer's technical department prior to submission to Architect.

E. Structural Calculations: Provide stamped and signed structural calculations prepared for this project by Professional Engineer currently registered in Washington State, calculations shall address all applicable loads identified in the IBC and shall include drag loads induced by snow load.

F. Test Reports and Approvals: Provide copies of applicable test reports and approvals confirming compliance with performance requirements of this section.

G. Samples for Verification of Coated Finishes: Submit two (2) 4-inch x 6-inch samples cut from actual coated metal material for each finish type, texture, and color.

H. Installer Approval: Submit letter of installer approval from metal panel system manufacturer for installation of their warranted roofing systems; letter shall indicate installer's current approval status at time of submittal and be dated within the last 30 days.

I. Project List (Upon Request Only): Provide list of all projects completed within the last three (3) years along with names and phone numbers of owners and general contractors.

J. Manufacturer's Twenty (20) Year Watertight Performance Warranty Documentation.

K. Manufacturer's Liability Insurance Documentation.

1.07 QUALITY ASSURANCE

A. Metal panels shall be factory roll formed; site formed panels are not acceptable.

B. Metal Panel Systems - Approvals and Testing:

1. Tested in accordance with UL 580 and ASTM E1592.

C. Professional Engineer Qualifications: Professional Structural Engineer experienced in design of this work and currently licensed in State of Washington.

D. Manufacturer Qualifications: A company with a minimum of ten (10) years of successful experience in the design, fabrication, and installation of metal panel systems comparable in size and nature to those required for this project.

1. Manufacturer shall carry $2,000,000 liability insurance, minimum, for metal panel system.

E. Installer Qualifications: installer shall have a minimum of five (5) years of successful experience under the current business name in the installation of metal panel systems comparable in size and nature to those required for this project (upon request provide listing of all projects completed within the last three (3) years along with names and phone numbers of owners and general contractors).

1. Installer shall be approved by the Metal Panel Manufacturer for installation of their warranted roofing systems.

F. Testing Agency Qualifications: Agency compliant with ISO/IEC 17025, or an accredited independent agency recognized by the International Laboratory Accreditation Cooperation Mutual Recognition Arrangement or ANSI.

G. Field Measurements: Measure in-place construction on which metal roofing system will be installed if possible, before fabrication of panels. If not feasible, fabricate material to allow in-field trimming of panels to assure proper fit.

1. Coordinate field measurements and shop drawings with shop fabrication to minimize field adjustments, splicing, and mechanical joints.

1.08 DESIGN RESPONSIBILITY (METAL ROOFING SYSTEM)

A. Metal Roofing System Design Responsibility: The metal roofing manufacturer is responsible for providing the technical design of a total metal roofing system, with associated materials, flashings, connections, details, etc. required to achieve a metal roofing installation that remains leak free for at least the duration of the warranty. Technical design by manufacturer shall be based upon and accommodate the configuration, layout and design elements of the metal roofing shown on the Contract Drawings.

1. The shop drawings approved by the metal roofing manufacturer are the Roofing System technical design drawings for use in construction. Roofing contractors bidding this roofing work shall base their bid on the requirements of the manufacturer's specific roofing system and details as it will appear on the shop drawings.

   a. Coordinate the fabrication and installation of sheet metal flashings and components which form a part of the roofing system with Section 07 6200 so that the completed roofing and flashing system is leak-free and conforms to the design requirements of the metal roofing manufacturer.

2. The Contractor's professional engineer is responsible for designing the connection of the metal panels to the building structure in conformance with the performance requirements specified in this section.

3. Metal Roofing Manufacturer shall provide and / or approve materials used in the application of the metal roofing system.

4. Metal Roofing Manufacturer shall approve installation methods used in the application of the metal roofing system.

5. Metal Roofing Manufacturer shall provide clear instruction to the installer on:

   a. Environmental requirements for storage and installation.

   b. Approved installation requirements of the metal roofing materials.

   c. Installation sequence.

   d. Proper assembly of the materials into a metal roofing system designed to provide a watertight roofing assembly.

1.09 MOCK-UP

A. Provide mock-up as specified in Section 07 2700 and per the following requirements:

1. Mock-Up: Install a job mock-up at project site matching the siding / cladding / roofing and air and water barrier systems proposed for this project.

a. Mock-up may be part of the building exterior wall, provided that the installation is acceptable, and shall contain all of the typical details.

b. Notify preformed metal panel system manufacturer's designated field service representative, Architect, and Owner when mock-up is complete and ready for review.

c. Allow ten (10) working days for review of mock-up before proceeding with work.

d. When accepted, mock-up will demonstrate minimum standard of quality required for this work. Replace any portion of the mock-up that is found to contain poor workmanship, or is not in conformance with the manufacturer's installation requirements, with the design intent or with the requirements of this section.

e. Maintenance: Maintain mock–up during construction for workmanship comparison; remove and legally dispose of mock-up when no longer required. Do not remove mock-up without Architect's approval.

1.10 PRE-INSTALLATION CONFERENCE

A. Prior to start of preformed metal panel system installation, Contractor shall schedule a pre-installation conference at the job site to review the project conditions and installation requirements as specified in Section 07 2700 and per the following requirements:

1. Review the following:

a. Project requirements and submittals.

b. Installer's training requirements.

c. Substrate work and preparation.

d. Areas of potential conflict and interface.

e. Availability of preformed metal panel materials and components.

f. Equipment.

g. Facilities and scaffolding.

h. Methods, procedures and sequencing requirements for full and proper installation, integration and protection.

i. Mock-up.

B. Persons attending pre-installation conference shall include the Contractor, preformed metal panel installer, sheet metal installer, preformed metal panel system manufacturer's designated field service representative, Architect, and Owner.

1.11 DELIVERY, STORAGE AND HANDLING

A. Deliver, store and handle products as recommended by manufacturer to prevent damage or discoloration.

1. Protect against damage and discoloration.

2. Handle panels with non-marring slings.

3. Do not bend panels.

4. Store panels above ground, with one end elevated for drainage.

5. Protect panels against standing water and condensation between adjacent surfaces.

6. If panels become wet, immediately separate sheets, wipe dry with clean cloth, and keep sheets separate for air-drying.

7. Do not allow panels with strippable film to be exposed to direct sunlight. Remove film prior to installation.

1.12 WARRANTY

A. Contractor's Warranty: Warrant the work of this Section, including panels, flashings, sealants, fasteners and accessories against defective materials and / or workmanship, to remain watertight and weatherproof with normal usage for two (2) years following Project Substantial Completion date. Correct any panels, flashing or sheet metal item that is defective, improperly installed or leaking at no cost to the Owner.

B. Manufacturer's twenty-five (25) year Prefinished Sheet Steel Warranty:

1. Architectural Fluorocarbon Finish Warranty:

a. Will be free of fading or color change in excess of 5 Hunter delta-E units as determined by ASTM D2244.

b. Will not chalk in excess of numerical rating of 8 when measured in accordance with standard procedures specified in ASTM D4214 method A D659.

c. Will not peel, crack, chip, or delaminate.

2. Metal substrate will not rupture, fail structurally, or perforate.

C. Manufacturer's Twenty (20) Year Weathertight Performance Warranty – Metal Roofing System: Manufacturer's standard warranty in which manufacturer agrees to repair or replace metal roofing panel assemblies that fail to remain weathertight within the twenty (20) year warranty period.

PART 2 PRODUCTS

2.01 METAL ROOFING PANEL SYSTEM

A. Manufacturer / Product: Products by AEP Span are the basis of design and the standard of quality, function, performance and appearance required for this project.

1. AEP Span (specified, basis of design).

2. Products by the following manufacturers may be acceptable, subject to their ability to meet or exceed this standard and provide products conforming with the requirements of the Drawings and this Specification:

a. Bryer Company.

b. Metal Sales.

c. Pac-Clad Petersen.

d. Taylor Metal Products.

3. Substitutions: Refer to Section 01 6000 for substitution procedures and requirements. Proposed substitutions must match specified product performance and colors.

B. Factory Prefinished Sheet Metal: Steel sheet with minimum yield of 50,000 psi conforming to ASTM A792/A792M coated with AZ50 zinc-aluminum alloy (Zincalume or Galvalume).

1. Factory Finish:

a. Finish Coating (Weather Side): Premium fluoropolymer coating with minimum of 70% Kynar 500 or Hylar 5000 base resin, factory-applied, oven baked and applied under controlled conditions.

b. Underside / Backside Finish: Manufacturer's standard corrosion-inhibiting wash coat.

2. Colors: _____.

3. Protective film: Provide strippable plastic film, applied to finish of coil stock before forming, or plastic interleaf, applied to panel after forming.

C. Standing Seam Metal Roofing System: AEP Span, *SpanSeam*, factory-formed metal panels with concealed clip fastening system for attaching metal roofing system to primary building structure.

1. Application: Concealed fastener standing seam roofing panel.

2. Panel Material: Fabricate panels from factory prefinished steel sheet.

3. Panel Width: 16-inch nominal width.

4. Panel Configuration: Flat pan configuration.

5. Panel Gauge: 24 gauge.

6. Seam Type: 180 degrees and 2-inches high, mechanically field seamed.

7. Seam Sealant: Factory apply high-grade butyl mastic sealant within the confines of panel's female leg, designed to seal against adjacent male panel leg.

8. Panel Length: Field verify.

9. Roof lengths that exceed manufacturer's maximum panel length shall have panel ends joints factory swaged.

D. Slip Sheet: Rosin sized sheathing paper as recommended by roofing system manufacturer.

E. Underlayment: 40 mil thick self-adhering, reinforced high temperature sheet; approved by metal roofing manufacturer for use on warranted roofing systems.

1. Manufacturer / Product: AEP Span, *Underlayment HT* is the basis of design and the standard of quality, function and performance required for this project.

a. AEP Span; *Underlayment HT* (specified, basis of design).

b. Products by other manufacturers may be acceptable, subject to their ability to meet or exceed this standard and provide products conforming with the requirements of the Drawings and this Specification.

c. Substitutions: Refer to Section 01 6000 for substitution procedures and requirements. Proposed substitutions must match specified product performance.

2. Primer: Provide primer on substrate when recommended by underlayment manufacturer due to surface porosity / adhesion issues or temperature related adhesion issues.

F. Roof Air / Vapor Barrier: Self-adhered air and vapor barrier sheet consisting of SBS modified bitumen on a polyethylene facer barrier, minimum 31 mil thickness.

1. Provide all components and accessories required for a complete and functional air and vapor barrier system supplied by a single manufacturer, complete with manufacturer designed installation details for each condition found on the project.

2. Any damage shall be repaired prior to installation of roofing and the barrier system is not left exposed longer than recommended by the manufacturer.

3. Manufacturers / Products: Subject to their ability to conform to the requirements of the Drawings and this Specification, the following manufacturers / products may be provided:

   a. Sika Sarnafil; *Vapor Retarder SA 31.*

   b. Soprema; *Sopravap'r.*

   c. Substitutions: Refer to Section 01 6000 for substitution procedures and requirements. Proposed substitutions must match specified products performance.

4. Primer: As recommended by the manufacturer for specified substrate and installation conditions.

G. Fastener Clips: Manufacturer's standard ASTM A792/A792M Zincalume or Galvalume coated sheet steel clip, UL Class 90 rated, conform to engineered design requirements.

1. Provide clip designed to allow panels to thermally expand and contract. Clip shall incorporate a self-centering feature to allow 1-inch of movement in both directions along panel length.

2. Clip type shall be selected to meet positive and negative pressures as specified.

H. Fasteners:

1. Screw Fasteners: Provide manufacturer's standard corrosion-resistant coated screw fasteners of size and type required for intended application.

   a. Use of cadmium-plated fasteners is not allowed.

   b. Exposed Fasteners: Coated to match color of roofing; non-rusting.

   c. Rivets: Non-rusting stainless steel.

      1) Not allowed where watertight seal is required.

      2) Exposed-to-view rivets are not allowed.

I. Sheet Metal Flashing, Closures and Trim: Provide as shown on the Drawings and as required by metal roofing system manufacturer to achieve watertight installation; comply with sheet metal fabrication standards specified in Section 07 6200.

1. Fabricate from 24 gauge factory finished steel sheet with same coating, finish and color as adjacent roofing panel.

J. Sealants:

1. Concealed from View: High grade non-curing butyl or curing urethane sealant as recommended by panel manufacturer.

2. Exposed to View: Silicone sealant in color matching the roofing color.

a. Manufacturers / Products: Subject to their ability to conform to the requirements of the Drawings and this Specification, the following manufacturers / products may be provided:

1) DowSil; *795 Silicone Building Sealant.*

2) GE Momentive; *Silpruf SCS2000.*

3) Titebond; *Weathermaster Metal Roof Sealant.*

4) Substitutions: Refer to Section 01 6000 for substitution procedures and requirements. Proposed substitutions must match specified products performance and colors.

K. Fabrication:

1. Coordinate and confirm field dimensions and conditions prior to fabrication.

2. Factory form metal panels in continuous one-piece lengths; site formed panels are not allowed.

a. Fabricate panels to profiles and configuration required by metal panel manufacturer and as shown on the Drawings for watertight assembly.

b. Panels shall be factory correctively-leveled.

3. Seams:

a. Panel seams shall interlock entire length of seam.

b. Design standing seam to lock up and resist joint disengagement during design wind uplift conditions as calculated according to local building codes.

c. Provide pre-installed sealant within confines of panel's female leg to aid in resistance of leaks and provide panel-to-panel seal while allowing expansion and contraction movement.

d. Seams shall be continuously folded over and locked together by mechanical means during installation. Seaming tools shall be sourced from manufacturer's recommended vendor.

4. Shop fabricate flashing and trim in prefinished sheet metal matching roof panels in longest lengths practical to profiles and configuration required by manufacturer and as shown on the Drawings.

a. Conform to fabrication requirements specified in Section 07 6200.

b. Gauge: 24 gauge minimum; increase thickness where recommended by manufacturer or where field conditions require additional stiffness to avoid waviness or visible deflection.

2.02 METAL WALL PANEL SYSTEM

A. Manufacturer / Product: Products by AEP Span are the basis of design and the standard of quality, function, performance and appearance required for this project.

1. AEP Span (specified, basis of design).

2. Products by the following manufacturers may be acceptable, subject to their ability to meet or exceed this standard and provide products conforming with the requirements of the Drawings and this Specification:

a. Bryer Company.

b. Metal Sales.

c. Pac-Clad Petersen.

d. Taylor Metal Products.

3. Substitutions: Refer to Section 01 6000 for substitution procedures and requirements. Proposed substitutions must match specified product performance and colors.

B. Factory Prefinished Sheet Metal: Steel sheet with minimum yield of 50,000 psi conforming to ASTM A792/A792M coated with AZ50 zinc-aluminum alloy (Zincalume or Galvalume).

1. Factory Finish:

a. Finish Coating (Weather Side): Premium fluoropolymer coating with minimum of 70% Kynar 500 or Hylar 5000 base resin, factory-applied, oven baked and applied under controlled conditions.

b. Underside / Backside Finish: Manufacturer's standard corrosion-inhibiting wash coat.

2. Colors: _____.

3. Protective film: Provide strippable plastic film, applied to finish of coil stock before forming, or plastic interleaf, applied to panel after forming.

C. Metal Wall System #1: AEP Span, *Prestige Series* factory-formed metal panels with concealed fastener attachment to building structure.

1. Application: Concealed fastener wall panel.

2. Panel Material: Fabricate panels from factory finished steel sheet.

3. Panel Gauge: 22 gauge minimum.

4. Profile: Smooth (no ribs).

5. Panel Surface Finish: No perforations; smooth surface finish.

6. Panel Thickness: 1-1/2-inches.

7. Panel Width (net coverage): 12-inches.

8. Panel Length: Refer to Drawings and field measurements.

9. Sidelap Sealant: Provide continuous factory-applied sidelap sealant (field-applied sealant is not acceptable).

10. Panel Direction: Install panels vertically.

D. Fasteners: Provide manufacturer's recommended galvanized steel corrosion-resistant screw fasteners and anchors of size and type required for intended application and substrate conforming to structural design criteria.

1. Use of cadmium-plated fasteners is not allowed.

E. Profile Closures Strip: Closed-cell neoprene rubber, die-cut to fit panel profile with 5 to 10 percent compression.

F. Sheet Metal Flashings and Trim:

1. Fabricate from 24 gauge factory finished steel sheet, with same finish and color as adjacent wall panels.

2. Provide perimeter trim and flashings required for a complete, watertight wall panel system in accordance with manufacturer’s standard details and as shown on the Drawings, including inside and outside corners, head flashing, sill flashing, end trim, flashing around penetrations, etc.

3. Comply with sheet metal fabrication standards specified in Section 07 6200.

G. Sealants and Gaskets: Provide metal panel system manufacturer's recommended sealant.

1. Exposed Joint Sealant: Provide as specified in Section 07 9000.

H. Penetrations: Provide metal panel system manufacturer’s recommended flashing system.

I. Fabrication:

1. Coordinate and confirm field dimensions and conditions prior to fabrication.

2. Factory form metal panels in continuous one-piece lengths; site formed panels are not allowed.

a. Fabricate panels to profiles and configuration required by metal panel manufacturer and as shown on the Drawings for watertight assembly.

3. Shop fabricate flashing and trim in prefinished sheet metal matching wall panels in longest lengths practical to profiles and configuration required by manufacturer and as shown on the Drawings.

a. Conform to fabrication requirements specified in Section 07 6200.

b. Gauge: 24 gauge minimum; increase thickness where recommended by manufacturer or where field conditions require additional stiffness to avoid waviness or visible deflection.

2.03 RIGID FOAM INSULATION

A. Rigid Foam Insulation (Under Metal Roofing with T&G Wood Deck Below): Rigid board insulation consisting of a glass-fiber-reinforced polyisocyanurate foam core laminated between glass fiber facers. Conform to ASTM C1289 Type II, Class 2, Grade 2 and the following:

1. Insulation Thickness and Number of Layers: Refer to the Drawings for the locations.

a. R-38 Insulation Thickness: 1 base layer of 3.50-inch thick insulation and 1 layer of 3.10-inch thick insulation.

2. Panels Size: Largest size practical for installation to yield fewest joints.

3. Manufacturer / Product: RMax (Sika), *Multi-MaX FA-3* is the basis of design and the standard of quality, function and performance required for this project.

a. RMax (Sika); *Multi-MaX FA-3* (specified, basis of design).

b. Products by other manufacturers may be acceptable, subject to their ability to meet or exceed this standard and provide products conforming with the requirements of the Drawings and this Specification.

c. Substitutions: Refer to Section 01 6000 for substitution procedures and requirements. Proposed substitutions must match specified product performance.

B. Spray Foam: Refer to Section 07 9000.

PART 3 EXECUTION

3.01 COORDINATION

A. Review, coordinate and accommodate work of other trades that interface with, affect or are affected by the work of this section so as to facilitate the execution of the overall Work of this project in a coordinated and efficient manner.

B. The installation of the roof air / vapor barrier specified in this section, the rigid foam insulation specified in this section, and the underlayment / metal roof panel installation shall be scheduled to coincide with dry weather and shall progress in an orderly manner section by section so that no more insulation is installed than can be covered or protected the same day. Do not leave the roof deck and building exposed to the elements overnight, provide roofing or temporary roof covering over all exposed deck areas at the end of each work day or cover immediately if wet weather threatens.

C. Coordinate layout and installation of framing / backing with Section 06 1000 to provide proper support and attachment points in locations required for wall panels.

D. Coordinate installation of sheet metal flashings with Section 07 6200 for proper sequence and for watertight assembly.

E. Coordinate work with other adjacent elements of building envelope to ensure watertight construction.

F. Coordinate and accommodate openings and penetrations required by other trades.

3.02 EXAMINATION

A. Verify that substrate and structural to receive work of this section is complete, properly sized and is laid out correctly in plan and elevations in conformance with the shop drawing.

B. Confirm that structural elements, to which the metal panels will be attached, are adequate to provide secure attachment of the support substructure and metal panels.

C. Confirm that framing / backing is installed for support and fastening metal panels.

D. Confirm that substrate (framing / decking) is plumb and straight, and that surface plane is within 1/4-inch in 10 feet tolerance.

E. Report any variations and potential problems; do not start work until unsatisfactory conditions have been corrected.

F. Start of installation indicates acceptance of the building structure, roof decking and site conditions.

3.03 INSTALLATION – ROOF AIR / VAPOR BARRIER

A. Install roof air / vapor barrier over entire roof deck, continuous and unbroken, in accordance with manufacturer's installation instructions. Installation shall be airtight and meet the requirements of Section 07 2700 for air barrier installations.

1. Install to a clean and dry substrate in accordance with manufacturer's installation instructions to achieve a watertight barrier installation.

   a. Roll the entire surface of the barrier down tight to the substrate using a heavy roller as recommended by the manufacturer to eliminate air bubbles, fishmouths and so as to achieve a good bond to substrate.

   b. Install primer as recommended by the manufacturer for specified substrate.

2. Perimeter Sealing: Seal the barrier system at the roof perimeter as shown on the Drawings to achieve an airtight and watertight connection between roof and wall water barrier systems.

3. The completed barrier system shall provide a continuous unbroken roof water barrier free of leaks in the field, at the perimeter or at penetrations.

4. Barrier system shall not be left exposed for longer that recommended by the system manufacturer.

5. Limit construction traffic over the barrier system and provide temporary protection to prevent damaging the barrier system.

6. Any damage to the barrier system must be repaired as recommended by the manufacturer prior to installation of the roofing system.

3.04 INSTALLATION – RIGID FOAM INSULATION – ROOF

A. Schedule installation of rigid insulation to occur at the same time as the installation of metal roofing panels; do not leave insulation exposed to the weather.

B. Install rigid insulation panels on roof deck with edges butted tight as recommended by manufacturer.

1. Cut panels for tight fit to penetrations and adjacent vertical interruptions.

C. Secure panels to deck as required to prevent blowoff until metal roofing panels are installed.

D. Fill any gaps or open areas around penetrations or between panels with spray foam.

3.05 INSTALLATION – UNDERLAYMENT

A. Underlayment: Install over insulation in accordance with manufacturer's installation instructions to provide a watertight installation.

1. Repair any damaged areas before installing metal roofing system.

B. Seal penetrations through underlayment watertight.

3.06 INSTALLATION – METAL ROOFING SYSTEM

A. Install layer of slip sheet paper over underlayment when recommended by roofing system manufacturer.

B. Install metal roofing system straight and square with building lines in accordance with manufacturer's recommended installation instructions and engineered shop drawings to achieve a watertight installation.

C. Anchor securely in place using clips and fasteners spaced in accordance with manufacturer's recommendations for design wind load criteria to conform to Performance Requirements.

1. Where metal roof panels are installed over exposed to view tongue and groove wood decking, select fastener sizes so that the fastener does not penetrate all the way through the exposed face of the decking. Fasteners shall not be seen where the tongue and groove wood decking is exposed to view on the bottom side.

D. Install metal roofing panels in single, continuous length from eaves to ridge.

E. Comply with methods and recommendations of SMACNA (ASMM) for flashing configurations required.

F. Install sealants, closures and flashing / trim as the work progresses to ensure watertight performance of the completed installation.

G. Form seams with manufacturer-approved motorized seaming tool; completely engage panel, clip, and factory-applied sealant in seam.

3.07 INSTALLATION – METAL WALL PANEL SYSTEMS

A. Install manufactured metal wall panels in accordance with panel manufacturer's installation instructions and approved shop drawing to achieve a watertight installation.

B. Fasten panels to building structure as necessary to comply with performance criteria, allowing for expansion and contraction due to temperature variations and building movement.

C. Install panels in one continuous length for height (vertical installation) of walls to receive metal wall panels.

D. Install gaskets, sealants, closures, and flashings / trim as the work progresses to ensure watertight performance of the completed installation.

1. Install profiled closure strip concealed at panels edges.

3.08 CLEANING AND PROTECTION

A. Remove protective coverings from prefinished metal surfaces after each panel is installed.

B. Remove all loose fasteners, metal scraps and debris and sweep clean.

C. Replace any panels or flashing / trim that has damage to the paint coating that voids the manufacturer's warranty or where damage is visible.

D. Clean finished surfaces using techniques and materials recommended by panel manufacturer. Protect cleaned surfaces until project completion.

E. Prevent traffic across metal roofing after installation is complete.

3.09 FIELD QUALITY CONTROL AND INSPECTIONS

A. Contractor Quality Control: Employ / assign quality control personnel to monitor the work of this section for conformance to the requirements of the Contract Documents and to good construction practices.

1. Contractor is solely responsible for managing and controlling the quality of the work and conformance with the requirements of the Contract Documents.

B. Manufacturer's field representative shall review the installation requirements with the installer and perform field inspections.

1. Review installation concerns and requirements, including detailing at openings and penetrations with installer.

2. Inspect and approve the installation after completion.

3. Identify any deficiencies in the work that do not conform to the manufacturer's requirements.

4. Reinspect deficient work for compliance with manufacturer's requirements.

END OF SECTION

SECTION 07 4233

SOLID PHENOLIC WALL PANEL SYSTEM

PART 1 GENERAL

1.01 RELATED DOCUMENTS

A. Drawings and general provisions of the Contract, including General Conditions, Supplementary Conditions and Divisions 00 and 01 Specification Sections, apply to work of this section.

1.02 SECTION INCLUDES

A. Exterior Solid Phenolic Cladding Panel System.

B. Substructure System for Panel System.

1.03 PERFORMANCE REQUIREMENTS

A. Environmental Requirements:

1. Provide for expansion and contraction of system components due to changes in ambient temperature and solar heat gain. Accommodate movement due to temperature change without buckling, undue stress on structural elements, reduction of performance, or other damaging effects.

   a. Anticipated ambient temperature range: Minus 5 degrees to plus 140 degrees F.

B. Structural Design: Provide structural engineering design for the solid phenolic single-skin wall panels, and the substructure support framing system and the connections to the building structure.

1. Engage the services of a qualified Professional Engineer, experienced in the design of solid phenolic single-skin wall panel systems and is currently registered in the State of Washington, to provide the structural engineering design.

2. Include the design of substructure support framing system, clips and fasteners required to connect panels to building wall structure and provide support / connection as recommended by the solid phenolic single-skin wall panel cladding manufacturer.

C. Work of Other Trades: Review and coordinate work of other trades that interface with or pass through the solid phenolic wall panel cladding system.

1. Make whatever provisions are necessary to the design, layout and fabrication of the solid phenolic wall panel cladding system to accommodate work by others.

1.04 REFERENCES

A. References shall be the edition current as of the date of the Contract Documents.

B. ASTM B117 - Standard Practice for Operating Salt Spray (Fog) Apparatus.

C. ASTM D635 - Standard Test Method for Rate of Burning and/or Extent and Time of Burning of Plastics in a Horizontal Position.

D. ASTM D1929 - Standard Test Method for Determining Ignition Temperature of Plastics.

E. ASTM D2244 - Standard Practice for Calculation of Color Tolerances and Color Differences from Instrumentally Measured Color Coordinates.

F. ASTM D2247 - Standard Practice for Testing Water Resistance of Coatings in 100 % Relative Humidity.

G. ASTM E84 - Standard Test Method for Surface Burning Characteristics of Building Materials.

H. ASTM E119 - Standard Test Methods for Fire Tests of Building Construction and Materials.

I. ASTM E330/E330M - Standard Test Method for Structural Performance of Exterior Windows, Doors, Skylights and Curtain Walls by Uniform Static Air Pressure Difference.

J. ISO 846 - Plastics - Evaluation of the Action of Microorganisms.

K. ISO 9001 - Quality Management Systems — Requirements.

L. NFPA 268 - Standard Test Method for Determining Ignitability of Exterior Wall Assemblies Using a Radiant Heat Energy Source.

M. NFPA 285 - Standard Fire Test Method for Evaluation of Fire Propagation Characteristics of Exterior Wall Assemblies Containing Combustible Components.

N. WSEC - Washington State Energy Code.

1.05 SUBMITTALS

A. Refer to Section 01 3300 for submittal procedures.

B. Product Data: Submit product data for each type of solid phenolic wall panel, trim, joint, substructure system, thermal insulation, screws, and sealant.

C. Shop Drawings – Substructure System: Provide plans, elevations and details of substructure system showing layout and each component of system.

1. Include structural design loads and criteria used in the structural design to indicate compliance with the Performance Requirements specified herein.

2. Include thermal analysis report indicating assembly U-values for the system conforming to requirements of the Washington State Energy Code (WSEC) and that are acceptable to the Building Official.

D. Coordination Drawings: Submit coordination drawings showing layout and elevations; fastening and anchoring methods; detail and location of joints, sealants, and gaskets, including joints necessary to accommodate thermal movement; trim; flashing; and accessories.

E. Structural Calculations: Provide structural calculations for cladding system design and connection to building structure showing conformance to performance requirements prepared and stamped by registered structural engineer currently licensed in the State of Washington.

F. Sample of Cladding System: Submit 12-inch x 12inch sample panels in thickness specified, from an available stock color, including clips, anchors, supports, fasteners, closures and other panel accessories, for review of system assembly. Include panel assembly samples not less than 24-inches x 24-inches, showing 4-way joint.

G. Code Compliance Reports: Submit appropriate Evaluation Reports and / or test reports acceptable to Building Official showing product compliance with the International Building Code and applicable local codes.

H. Test Reports: Submit certified test reports on proposed cladding system showing compliance with specified performance requirements and physical properties.

I. Certification: Submit product certificates signed by manufacturer certifying materials comply with specified performance requirements and physical requirements. Certificates shall list the name and address of the project along with the current date.

J. Installer Approval: Submit letter of fabrication and installer approval from system manufacturer.

K. Warranty: Submit sample warranty documents for review.

L. Closeout Submittals: Submit the following:

1. Operation and Maintenance Data: Operation and maintenance data for installed products in accordance with Section 01 7700 and Section 01 7823. Include methods for maintaining installed products and precautions against cleaning materials and methods detrimental to finishes and performance.

1.06 QUALITY ASSURANCE

A. Manufacturer Qualifications: Company with a minimum of ten (10) years of experience manufacturing panel material of the type specified and possessing ISO 9001 Certification.

B. Fabricator / Installer Qualifications: A single company with a minimum of five (5) years of experience on similar sized solid phenolic single-skin wall panel projects and qualified by the panel material manufacturer. Capable of providing field service representation during construction.

C. Field Quality Control: Comply with panel system manufacturer's recommendations and guidelines for field forming of panels.

1.07 MOCK-UP

A. Provide mock-up as specified in Section 07 2700 and per the following requirements:

1. Mock-Up: Install a job mock-up at project site matching the siding / cladding and air and water barrier systems proposed for this project.

   a. Mock-up may be part of the building exterior wall, provided that the installation is acceptable, and shall contain all of the typical details.

   b. Notify solid phenolic wall panel system manufacturer's designated field service representative, Architect, Owner, and Owner Representative(s) when mock-up is complete and ready for review.

   c. Allow ten (10) working days for review of mock-up before proceeding with work.

   d. When accepted, mock-up will demonstrate minimum standard of quality required for this work. Replace any portion of the mock-up that is found to contain poor workmanship, or is not in conformance with the manufacturer's installation requirements, with the design intent or with the requirements of this section.

   e. Maintenance: Maintain mock–up during construction for workmanship comparison; remove and legally dispose of mock-up when no longer required. Do not remove mock-up without Architect's approval.

1.08 PRE-INSTALLATION CONFERENCE

A. Prior to start of solid phenolic wall panel system installation, Contractor shall schedule a pre-installation conference at the job site to review the project conditions and installation requirements as specified in Section 07 2700 and per the following requirements:

1. Review the following:

a. Project requirements and submittals.

b. Installer's training requirements.

c. Substrate work and preparation.

d. Areas of potential conflict and interface.

e. Availability of solid phenolic wall panel materials and components.

f. Equipment.

g. Facilities and scaffolding.

h. Methods, procedures and sequencing requirements for full and proper installation, integration and protection.

i. Mock-up.

B. Persons attending pre-installation conference shall include the Contractor, solid phenolic wall panel installer, sheet metal installer, solid phenolic wall panel system manufacturer's designated field service representative, Architect, and Owner.

1.09 DELIVERY, STORAGE AND HANDLING

A. Deliver, store and handle products as recommended by manufacturer to prevent damage or discoloration.

1.10 PROJECT CONDITIONS

A. Field Measurements: Verify actual measurements / openings by field measurements before fabrication; show recorded measurements on shop drawings. Coordinate field measurements and fabrication schedule with construction progress to avoid construction delays.

1.11 WARRANTY

A. Manufacturer's Warranty: Warrant panels to be free from manufacturing defects and against delamination or failure of the panel integrity for a period of ten (10) years following Project Substantial Completion date.

PART 2 PRODUCTS

2.01 SOLID PHENOLIC WALL PANELS

A. Manufacturer / Product: Trespa, *Meteon* is the basis of design and the standard of quality, function, performance and appearance required for this project.

1. Trespa; *Meteon* (specified, basis of design).

2. Products by other manufacturers may be acceptable, subject to their ability to meet or exceed this standard and provide products conforming with the requirements of the Drawings and this Specification.

3. Substitutions: Refer to Section 01 6000 for substitution procedures and requirements. Proposed substitutions must match specified product performance and colors.

B. Material: Solid panel manufactured using a combination of high pressure and temperature to create a flat panel created from thermosetting resins, homogenously reinforced with wood-based fibers and an integrated decorative surface or printed décor.

1. Colors: _____.

2. Finish: Satin Sheen.

3. Panel Thickness: 5/16-inch.

4. Physical Properties:

a. Modulus of Elasticity: 1,300,000 psi minimum, ISO 178.

b. Tensile Strength: 10,100 psi minimum, ISO 527-2.

c. Flexural Strength: 14,500 psi minimum, ISO 178.

d. Thermal Conductivity: 2.1 BTU / inch / ft^2.hr.°F, EN 12524.

e. Structural Performance (ASTM E330/E330M):

1) Panels shall be designed to withstand the Design Wind Load based upon the local building code, but in no case less than 15 pounds per square foot (psf). Wind load testing shall be done in accordance with this standard to obtain the following results:

2) Normal to the plane of the wall, the maximum panel deflection shall not exceed L / 175.

3) Normal to the plane of the wall between supports, deflection of the aluminum sub-framing members shall not exceed L / 175 or 3/4-inch, whichever is less.

a) At 1-1/2 times design pressure, permanent deflection of framing members shall not exceed L / 100 of span length and components shall not experience failure or gross permanent distortion.

b) If system tests are not available, mock-ups shall be constructed and tests performed under the direction of an independent third party laboratory which show compliance to the minimum standards listed above.

5. Fire Performance:

a. Flame Spread: Class A, ASTM E84.

b. Smoke Development: Less than 450, ASTM E84.

c. Ignition Temperature: Greater than 650 degree F (350 degree C) above ambient, ASTM D1929.

d. Burning Classification: CC1 or CC2, ASTM D635.

e. When required for compliance with local building codes, the wall cladding assembly shall show no degradation of the rating of Fire-Resistant Assemblies, ASTM E119.

f. When required for compliance with local building codes, the wall cladding assembly including cladding and non-cladding elements such as, but not limited to, specific air / water / vapor barriers and / or exterior insulation materials, shall meet the performance requirements of NFPA 285. Performance shall be determined by actual testing in accordance with NFPA 285 or through an equivalency analysis provided by a recognized fire protection expert.

g. When required for compliance with local building codes, the wall cladding assembly shall not ignite when exposed to a radiant heat energy source, NFPA 268.

6. Finish Performance: Electron Beam Cure resin in conformance with the following general requirements:

a. Humidity Resistance: No formation of blisters when subjected to condensing water fog at 100% relative humidity and 100 degree F (38 degree C) for 3000 hours, ASTM D2247.

b. Salt Spray Resistance: Corrosion creepage from scribe line (1/16-inch max.) and minimum blister rating of 8 within the test specimen field, ASTM B117.

c. Weather Exposure: Accelerated – 3000 hours in Atlas Type Weatherometer using cycle of 90 minutes light and 30 minutes diminished light and demineralized water with a maximum color change of 5 Delta E units from the original color according to ASTM D2244, with the exception of Uni-Colors A12.3.7 / A18.3.5 / A04.1.7, which will not deviate more than 10 Delta E units from original color according ASTM D2244.

d. Color Stability: The decorative surface comply with, classification, 4 - 5 measured with the grey scale according to ISO 105 A02-93 according to test method EN 438-2:29.

e. Microbial Characteristics: Will not support micro-organic growth (ISO 846).

2.02 MOUNTING AND SUBSTRUCTURE SYSTEM

A. Mounting System:

1. TS210-285 - Concealed fastening over fixed depth aluminum sub-framing tested and meeting the performance requirements of NFPA 285.

B. Aluminum Substructure: Aluminum substructure designed to withstand structural loading due to wind load and the dead load of the panel, painted as required to conceal behind the open joinery of the attachment system.

1. Extrusions, including corner closures, joint closures and vent screens, formed members, sheet, and plate shall conform with the recommendations of the manufacturer.

2.03 AIR AND WATER BARRIER SYSTEMS

A. Sheet-Applied Air and Water Barrier System: Specified in Section 07 2719.

2.04 ACCESSORIES

A. Extruded Aluminum Trim Colors: _____.

B. Fasteners (Concealed / Exposed): Fasteners shall be non-corrosive and as recommended by panel manufacturer. Exposed fasteners shall be colored to match panels.

C. Panel Corner Profile:

1. Dimensions: 5/16-inch thick by 3/4-inch radius.

D. Joint sealant and adhesive as required to suit project conditions.

2.05 FABRICATION

A. Panels: Solid phenolic impregnated kraft paper wall panels with no voids, air spaces or foamed insulation in the core material.

B. Accessory items in accordance with manufacturer's recommendations and approved submittals.

C. Panel Dimensions: Field fabrication shall be allowed where necessary, but shall be kept to an absolute minimum. Fabrication shall be done under controlled shop conditions when possible.

D. Appearance: Panel lines, breaks, and angles shall be sharp, true, and surfaces free from warp and buckle.

PART 3 EXECUTION

3.01 COORDINATION

A. Review, coordinate and accommodate work of other trades that interface with, affect or are affected by the work of this section so as to facilitate the execution of the overall Work of this project in a coordinated and efficient manner.

B. Coordinate layout and installation of framing / backing with Section 06 1000 to provide proper support and attachment points in locations required for substructure system.

C. Coordinate with installation of sheet-applied air and water barrier specified in Section 07 2719 for proper sequence and for watertight assembly.

D. Coordinate with installation of sheet metal flashings specified in Section 07 6200 for proper sequence and for watertight assembly.

E. Coordinate work with other adjacent elements of building envelope to ensure watertight construction.

F. Coordinate and accommodate openings and penetrations required be other trades.

3.02 EXAMINATION

A. Inspect surfaces to receive cladding system and confirm that they are a uniformly flat plane, smooth, sound, clean, dry and free from defects detrimental to work.

1. Confirm that substrate surface is plumb and straight, and that surface plane is within 1/4-inch in 10 feet tolerance.

B. Inspect substrate and structure to receive work of this section and confirm it is complete, properly sized and is laid out correctly in plan and elevations in conformance with the Drawings.

C. Confirm that structural elements, to which the cladding system will be attached, are adequate to provide secure attachment of the cladding system.

D. Confirm that necessary framing / backing is installed for support and fastening of cladding system.

E. Inspect sheet-applied air and water barrier for proper installation that will provide airtight and watertight installation.

F. Report any variations and potential problems; do not start work until unsatisfactory conditions have been corrected.

G. Start of installation indicates acceptance of the substrate, structural system, air and water barrier system and site conditions.

3.03 PROTECTION

A. Protect liquid-applied air and water barrier system from damage during wall panel system installation.

3.04 INSTALLATION – SOILD PHENOLIC WALL PANEL SYSTEM

A. Install solid phenolic wall panels and sub-frame system in accordance with manufacturer's instructions.

B. Install solid phenolic wall panels plumb and level and accurately spaced in accordance with manufacturer's recommendations and approved submittals and drawings.

C. Anchor panels and sub-framing securely per engineering recommendations and in accordance with approved shop drawings to allow for necessary movement and structural support.

D. Fasten solid phenolic wall panels with fasteners approved for use with supporting substrate.

E. Do not install panels or component parts which are observed to be defective or damaged including, but not limited to: warped, bowed, abraded, scratched, and broken members.

F. Do not cut or trim component parts during installation in a manner that would damage the finish, decrease the strength, or result in visual imperfection or a failure in performance. Return component parts with require alteration to the shop for re-fabrication or replacement.

G. Install corner profiles and trim with fasteners appropriate for use with adjoining construction as indicated on the Contract Drawings and as recommended by manufacturer.

3.05 WORKMANSHIP

A. Cladding system shall be installed using the best workmanship, including the following:

1. No holes, tears, rips or damage in the sheet-applied air and water barrier system.

2. No stripped screw fasteners.

3. No damaged or scratched finish on panels.

4. Reveal joints properly aligned and panel faces set flush.

5. No exposed fasteners visible.

6. Panel finish direction aligned in same orientation on entire building face.

B. Any part of the work of this section installed with improper or poor workmanship shall be removed and replaced at Contractor's expense.

3.06 CLEANING AND PROTECTION

A. Remove temporary coverings from solid phenolic panels after each panel is installed.

B. Remove and replace panels damaged beyond repair as a direct result of the panel installation.

C. Make sure weep holes and drainage channels are unobstructed and free of dirt and sealants.

D. Protect cladding system from damage.

E. Remove loose fasteners, metal scraps and debris and sweep clean.

F. Clean finished surfaces using techniques and materials recommended by panel manufacturer. Protect cleaned surfaces until project completion.

3.07 FIELD QUALITY CONTROL

A. Contractor Quality Control: Employ / assign quality control personnel to monitor the work of this section for conformance to the requirements of the Contract Documents and to good construction practices.

1. Contractor is solely responsible for managing and controlling the quality of the work and conformance with the requirements of the Contract Documents

END OF SECTION

SECTION 07 4649

PREFINISHED FIBER CEMENT SIDING

PART 1 GENERAL

1.01 RELATED DOCUMENTS

A. Drawings and general provisions of the Contract, including General Conditions, Supplementary Conditions and Divisions 00 and 01 Specification Sections, apply to work of this section.

1.02 SECTION INCLUDES

A. Prefinished Fiber Cement Lap Siding.

B. Rainscreen Cavity Battens.

1.03 PERFORMANCE REQUIREMENTS / DESIGN CRITERIA

A. Siding Accommodation: Design framing supports configuration, size, spacing, and make adjustments as needed to accommodate support for each siding type, specified in this section and shown on Drawings.

1.04 REFERENCES

A. References shall be the edition current as of the date of the Contract Documents.

B. ASTM A792/A792M - Standard Specification for Steel Sheet, 55% Aluminum-Zinc Alloy-Coated by the Hot-Dip Process.

1.05 SUBMITTALS

A. Refer to Section 01 3300 for submittal procedures.

B. Product Data: Submit product data for each type of rainscreen cavity furring, fiber cement siding, trim, screws, and sealant.

C. Samples:

1. Provide two (2) 12-inch long samples of each different sheet metal trim shown.

2. Provide two (2) 12-inch long samples of prefinished fiber cement siding.

D. Project List (Upon Request Only): Provide list of at least five (5) recently completed projects with addresses and contact phone numbers within 150 miles of this project.

1.06 PRE-INSTALLATION CONFERENCE

A. Prior to start of fiber cement siding installation, Contractor shall schedule a pre-installation conference at the job site to review the project conditions and installation requirements as specified in Section 07 2700 and per the following requirements:

1. Review the following:

a. Project requirements and submittals.

b. Substrate work and preparation.

c. Areas of potential conflict and interface.

d. Availability of fiber cement siding materials and components.

e. Equipment.

f. Facilities and scaffolding.

g. Methods, procedures and sequencing requirements for full and proper installation, integration and protection.

B. Persons attending pre-installation conference shall include the Contractor, fiber cement siding installer, sheet metal installer, Architect, and Owner.

1.07 QUALITY ASSURANCE

A. Manufacturer Qualifications: Company specializing in manufacturing products specified in this section, with a minimum of five (5) years of experience.

B. Installer Qualifications: Experienced in performing work of this section with a minimum of five (5) years of documented experience in the installation of work of similar size, scope, complexity.

1. Provide list of at least five (5) recently completed projects with addresses and contact phone numbers within 150 miles of this project upon request.

1.08 DELIVERY, STORAGE AND PROTECTION

A. Delivery: Deliver materials in manufacturer’s original, unopened, undamaged containers with identification labels intact

B. Store and handle to keep clean, dry, and protected from damage due to weather and construction activities.

1.09 WARRANTY

A. Coating Warranty: Provide the manufacturer's standard twenty (20) year coating warranty on prefinished fiber cement siding.

PART 2 PRODUCTS

2.01 PREFINISHED FIBER CEMENT LAP SIDING

A. Prefinished Fiber Cement Lap Siding: Fiber cement lap siding, noncombustible, prefinished.

1. Manufacturer / Product: Woodtone, *RusticSeries* on Allura substrate is the basis of design and the standard of quality, function, performance and appearance required for this project.

   a. Woodtone; *RusticSeries* on Allura substrate (specified, basis of design).

   b. Products by other manufacturers may be acceptable, subject to their ability to meet or exceed this standard and provide products conforming with the requirements of the Drawings and this Specification.

   c. Substitutions: Refer to Section 01 6000 for substitution procedures and requirements. Proposed substitutions must match specified product performance and colors.

2. Style: Rustic Series.

3. Length: 12 feet.

4. Width: 5-1/4-inch.

5. Exposure to Weather: 4-inches.

6. Starter Strip: Fiber cement starter strip.

7. Custom Sheet Metal Trims: As shown on Drawings and specified herein.

8. Fasteners: Concealed from view screws specified herein.

9. Colors: _____.

2.02 ACCESSORIES

A. Custom Sheet Metal Trim for Siding: Custom fabricated from 24 gauge steel sheet conforming to ASTM A792/A792M with minimum yield of 50,000 psi and AZ50 (Zincalume or Galvalume) protective coating.

1. Factory Prefinished Coating: Refer to Section 07 6200.

2. Fabrication: Shop fabricate to match profiles shown on the Drawings and to fit field conditions using best fabrication methods and equipment; conform to fabrication requirements specified in Section 07 6200.

3. Colors: _____.

B. Lap Siding Fasteners:

1. Lap Siding Attachment (Concealed Fasteners): Hot dipped galvanized screw fasteners of sufficient length to provide minimum 1-inch embedment into wood wall framing or solid wood backing; size, spacing, and fastener type as recommended by siding manufacturer

C. Joint Flashing for Lap Siding: Use self-adhered sheet-applied air and water barrier sheet specified in Section 07 2719.

D. Sealant:

1. Manufacturer / Product: Subject to their ability to conform to the requirements of the Drawings and this Specification, the following manufacturers / products may be provided:

a. Master Builders; *MasterSeal NP 150*.

b. OSI; *Quad Max*.

c. Substitutions: Refer to Section 01 6000 for substitution procedures and requirements.

2. Color: Similar to prime finish color on siding.

2.03 RAINSCREEN CAVITY BATTENS

A. Rainscreen Battens: Specified in Section 07 2719.

2.04 AIR AND WATER BARRIER SYSTEM

A. Sheet-Applied Air and Water Barrier System: Specified in Section 07 2719.

PART 3 EXECUTION

3.01 COORDINATION

A. Review, coordinate and accommodate work of other trades that interface with, affect or are affected by the work of this section so as to facilitate the execution of the overall Work of this project in a coordinated and efficient manner.

B. Coordinate layout and installation of framing / backing with Section 06 1000 provide proper support and attachment points in locations required for siding rainscreen cavity battens.

C. Coordinate layout of battens in rainscreen cavity with Section 07 2719 for proper support in locations required for siding.

D. Coordinate fabrication and installation of sheet metal flashings with Section 07 6200 as required to achieve a weathertight assembly. Do not install siding until the flashings have been properly installed.

3.02 WEATHERTIGHT INSTALLATION

A. Siding, air and water barrier and flashing system installation shall be completely weathertight upon completion, install in a manner that sheds water to exterior of walls and provides a completely weathertight building exterior.

B. Remove, repair and replace any element of the complete siding system that leaks or admits water behind the air and water barrier to provide a weatherproof siding system.

3.03 EXAMINATION

A. Verify that the wall structure, sheathing and air and water barrier system is complete and ready to receive work of this section.

B. Confirm that framing, backing, furring, and battens are laid out correctly to provide support and secure attachment points for siding, including joints, ends and trim.

C. Confirm that framing / sheathing is plumb and straight, and that surface plane is within 1/4-inch in 10 feet tolerance.

D. Inspect air and water barrier system for proper installation that will provide watertight installation.

E. Report any unacceptable construction or conditions; do not start work until unsatisfactory conditions have been corrected.

F. Start of installation indicates acceptance of substrate, plastic battens, air and water barrier system and site conditions.

3.04 PREPARATION

A. Protect air and water barrier system from damage.

3.05 INSTALLATION – RAINSCREEN CAVITY BATTENS

A. Installation is Specified in Section 07 2719.

3.06 INSTALLATION – PREFINISHED FIBER CEMENT LAP SIDING

A. Install siding level, straight and true, with exposure as shown on Drawings in accordance with siding manufacturer's installation instructions.

B. Cuts Exposed to View: Cut with diamond blade circular saw to achieve a neat straight cut, do not score and snap.

1. Siding is prefinished, do not damage the finish of the panel at cut ends.

C. Field coat cut ends with manufacturer's recommended finishing product.

D. Lap Siding Butt Joints: Install lap siding in longest lengths possible with minimum number of joints, do not use short lengths where full length piece would eliminate joint.

1. Lay out butt joints to occur randomly on the wall, so that no discernable pattern is visible, stagger the joints between rows of siding.

2. Do not locate butt joints within 32-inches of any door, window or storefront opening.

3. Joints shall be cut square and true.

4. Locate joints over centerline of wall framing members, joints located at sheathing only are not allowed.

5. Lap Siding Butt Joints: Install a 12-inch x 12-inch piece of joint flashing centered behind butt joints with bottom edge lapped over siding row below (hold up 1/2-inch above bottom of siding to conceal from view) to prevent water penetration at joints. Apply two (2) vertical beads of sealant onto joint flashing 4-inches each way from joint.

E. Sealant Installation: Apply sealant concealed from view on back of siding as recommended by manufacturer and specified hereafter:

1. Clean siding and trim before applying sealant in accordance with sealant manufacturer's requirements.

2. Apply sealant to substrate (behind) as siding installation progresses and place siding into fresh sealant; wipe off excess sealant leaving a neat joint; the intent is for sealant to be located in and behind the joint, not on top of the siding. Do not apply sealant after siding is installed.

3. Install sealant in the following locations:

a. At juncture between siding and trim.

b. At lap siding end (butt) joints; apply two (2) vertical beads of sealant onto flexible flashing 4-inches each way from joint.

c. In locations shown on Drawings.

F. Remove any dirt on siding.

3.07 WORKMANSHIP

A. Fiber cement siding installation shall be installed using the best workmanship, including but not limited to the following:

1. Prefinished surfaces of siding shall be undamaged and free of dirt.

2. Siding shall run plumb, level, straight and true, parallel with building lines.

3. Butt joints in lap siding shall be cut square with consistent appearance and have a random layout with no discernable pattern on the wall.

4. Sheet metal trim joints shall be tight and cut straight and square.

5. Sheet metal trim shall be straight and free of damage.

6. Work shall be securely fastened and free of loose fit.

7. Sealant installation shall be neat and free of excess or rough sealant.

8. Installation shall conform to manufacturer's installation instructions.

9. No spalled edges at fasteners.

10. No broken corners or cracked siding panels / boards.

B. Any part of the siding installed with improper or poor workmanship shall be removed and replaced at Contractor's expense.

3.08 FIELD QUALITY CONTROL

A. Contractor Quality Control: Employ / assign quality control personnel to monitor the work of this section for conformance to the requirements of the Contract Documents and to good construction practices.

1. Contractor is solely responsible for managing and controlling the quality of the work and conformance with the requirements of the Contract Documents.

END OF SECTION

SECTION 07 4651

FIBER CEMENT SOFFITS

PART 1 GENERAL

1.01 RELATED DOCUMENTS

A. Drawings and general provisions of the Contract, including General Conditions, Supplementary Conditions and Divisions 00 and 01 Specification Sections, apply to work of this section.

1.02 SECTION INCLUDES

A. Fiber Cement Soffits.

1.03 SUBMITTALS

A. Refer to Section 01 3300 for submittal procedures.

B. Product Data: Submit product data for each type of fiber cement soffits, screws, and sealant.

C. Project List (Upon Request Only): Provide list of at least five (5) recently completed projects with addresses and contact phone numbers within 150 miles of this project.

1.04 QUALITY ASSURANCE

A. Manufacturer Qualifications: Company specializing in manufacturing products specified in this section, with a minimum of five (5) years of experience.

B. Installer Qualifications: Experienced in performing work of this section with a minimum of five (5) years documented experience in the installation of work of similar size, scope, complexity. Trained and authorized by substructure system manufacturer as qualified to install work of this section.

1. Provide list of at least five (5) recently completed projects with addresses and contact phone numbers within 150 miles of this project upon request.

1.05 DELIVERY, STORAGE AND PROTECTION

A. Delivery: Deliver materials in manufacturer's original, unopened, undamaged containers with identification labels intact

B. Store and handle to keep clean, dry, and protected from damage due to weather and construction activities.

PART 2 PRODUCTS

2.01 FIBER CEMENT SOFFIT PANELS

A. Fiber Cement Soffit: Fiber cement panels, noncombustible, factory prime painted ready to field finish.

1. Manufacturer / Product: James Hardie, *Vertical Siding* is the basis of design and the standard of quality, function and performance required for this project.

   a. James Hardie; *Vertical Siding* (specified, basis of design).

   b. Products by other manufacturers may be acceptable, subject to their ability to meet or exceed this standard and provide products conforming with the requirements of the Drawings and this Specification.

   c. Substitutions: Refer to Section 01 6000 for substitution procedures and requirements. Proposed substitutions must match specified product performance.

2. Style: Non-Vented Smooth.

3. Thickness: 5/16-inch.

4. Width: As required to fit condition and layout shown on the Drawings with minimum number of joints.

5. Length: As required to fit condition and layout shown on the Drawings with minimum number of joints.

6. Fasteners: Soffit screws specified herein.

2.02 FIBER CEMENT SOFFIT ACCESSORIES

A. Continuous Soffit Vent: PVC soffit vent matching fiber cement soffit thickness, white color suitable for field painting by Section 09 9000. Provide connector clips at joints between vent sections.

1. Manufacturer / Product: Products by Tamlyn are the basis of design and the standard of quality, function and performance required for this project.

   a. Tamlyn (specified, basis of design).

   b. Products by other manufacturers may be acceptable, subject to their ability to meet or exceed this standard and provide products conforming with the requirements of the Drawings and this Specification.

c. Substitutions: Refer to Section 01 6000 for substitution procedures and requirements. Proposed substitutions must match specified product performance.

2. Soffit Vent: 4-inch PVC soffit vent matching fiber cement soffit thickness.

a. Product: *4" Snapvent*.

3. Connector Clip: Clips at joints between vent sections.

a. Product: *Continuous Soffit Vent Connector Clip.*

B. Soffit Joint Trim: PVC H-mold matching fiber cement soffit thickness, white color suitable for field painting by Section 09 9000.

1. Manufacturer / Product: Tamlyn, *Soffit H-Mold* is the basis of design and the standard of quality, function and performance required for this project.

a. Tamlyn; *Soffit H-Mold* (specified, basis of design).

b. Products by other manufacturers may be acceptable, subject to their ability to meet or exceed this standard and provide products conforming with the requirements of the Drawings and this Specification.

c. Substitutions: Refer to Section 01 6000 for substitution procedures and requirements. Proposed substitutions must match specified product performance.

C. Fasteners:

1. Soffit Attachment: Type 305 stainless steel screws with flat head of sufficient length to provide minimum 1-inch embedment into wood soffit framing or solid wood backing or 3 full screw threads into steel furring / framing.

a. Manufacturer / Product: GRK Fasteners, *Pheinox R4 Stainless Steel Screw* is the basis of design and the standard of quality, function and performance required for this project.

1) GRK Fasteners; *Pheinox R4 Stainless Steel Screw* (specified, basis of design).

a) Website: www.grkfasteners.com.

2) Products by other manufacturers may be acceptable, subject to their ability to meet or exceed this standard and provide products conforming with the requirements of the Drawings and this Specification.

3) Substitutions: Refer to Section 01 6000 for substitution procedures and requirements. Proposed substitutions must match specified product performance.

D. Sealant:

1. Manufacturer / Product: Subject to their ability to conform to the requirements of the Drawings and this Specification, the following manufacturers / products may be provided:

a. Master Builders; *MasterSeal NP 150*.

b. OSI; *Quad Max*.

c. Substitutions: Refer to Section 01 6000 for substitution procedures and requirements.

PART 3 EXECUTION

3.01 COORDINATION

A. Review, coordinate and accommodate work of other trades that interface with, affect or are affected by the work of this section so as to facilitate the execution of the overall Work of this project in a coordinated and efficient manner.

B. Coordinate layout and installation of framing / backing with Section 06 1000 to provide proper support and attachment points in locations required for soffits.

C. Coordinate fabrication and installation of sheet metal flashings with Section 07 6200 as required to achieve a weathertight assembly. Do not install soffits until the flashings have been properly installed.

3.02 EXAMINATION

A. Verify that the structure is complete and ready to receive work of this section.

B. Confirm that framing and backing are laid out correctly to provide support and secure attachment points for siding and soffits, including joints, ends and trim.

C. Confirm that framing / sheathing is plumb and straight, and that surface plane is within 1/4-inch in 10 feet tolerance.

D. Report any unacceptable construction or conditions; do not start work until unsatisfactory conditions have been corrected.

E. Start of installation indicates acceptance of substrate, plastic battens, air and water barrier system and site conditions.

3.03 INSTALLATION – FIBER CEMENT SOFFITS

A. Lay out soffit panels for minimum number of joints, free of short lengths or pieces; align panels square and true and install in accordance with soffit manufacturer's installation instructions using stainless steel flat head screws.

B. Field Cutting: Cut panels accurately to size and configuration required with diamond blade circular saw, do not score and snap.

1. Field coat cut ends with manufacturer's recommended sealer / primer.

C. Soffit Joints: Lay out panels to provide minimum number of joints and as shown on the Drawings.

1. Joints shall be cut straight, square and true.

2. Locate joints over centerline of soffit framing members.

D. Fasten panels in place, level and straight; lay out screw fasteners in a uniform and symmetrical manner.

1. Pre-drill holes for screws to prevent breaking out edges of panels.

2. Screw panels to framing and backing at 6-inches on center at panel perimeter and 8-inches on center at panel field; comply with manufacturer's minimum edge distance recommendations.

3. Install continuous soffit vents and H-molding trim at panel joints.

E. Sealant Installation: Apply sealant in locations shown on Drawings:

1. Clean siding and trim before applying sealant in accordance with sealant manufacturer's requirements.

F. Remove any dirt on soffits and trim as required for field painting specified in Section 09 9000.

3.04 WORKMANSHIP

A. Fiber cement soffit installation shall be installed using the best workmanship, including but not limited to the following:

1. Prime painted surfaces of soffit shall be undamaged and free of dirt.

2. Soffits shall run plumb, level, straight and true, parallel with building lines.

3. Work shall be securely fastened and free of loose fit.

4. Sealant installation shall be neat and free of excess or rough sealant.

5. Installation shall conform to manufacturer's installation instructions.

6. No spalled edges at fasteners.

7. No broken corners or cracked soffit panels / boards.

B. Any part of the siding, soffit and trim installed with improper or poor workmanship shall be removed and replaced at Contractor's expense.

3.05 FIELD QUALITY CONTROL

A. Contractor Quality Control: Employ / assign quality control personnel to monitor the work of this section for conformance to the requirements of the Contract Documents and to good construction practices.

1. Contractor is solely responsible for managing and controlling the quality of the work and conformance with the requirements of the Contract Documents.

END OF SECTION

SECTION 07 5423

TPO SINGLE-PLY ROOFING SYSTEM

PART 1 GENERAL

1.01 RELATED DOCUMENTS

A. Drawings and general provisions of the Contract, including General Conditions, Supplementary Conditions and Divisions 00 and 01 Specification Sections, apply to work of this section.

1.02 SECTION INCLUDES

A. TPO Roofing System with Pedestal Pavers.

B. Rigid Foam Roof Insulation.

C. Roof Air / Vapor Barrier.

1.03 PERFORMANCE REQUIREMENTS

A. Roofing manufacturer is responsible for providing a total roofing system (from structural deck to top of roofing) that conforms to these performance requirements.

B. Watertight Design / Details: Provide roofing system that provides a watertight roofing installation for the duration of the warranty free of leaks or failures.

C. Roofing System Wind Load Design: The installed roofing system and its attachment to the building structure shall conform to the wind load design requirements of the International Building Code (IBC).

1. Positive and Negative Design Wind Loads: As specified in the General Notes on the Structural Drawings.

D. Fire Classification: UL (DIR) Class C.

1.04 REFERENCES

A. References shall be the edition current as of the date of the Contract Documents.

B. ASTM C1289 - Standard Specification for Faced Rigid Cellular Polyisocyanurate Thermal Insulation Board.

C. ASTM D1621 - Standard Test Method for Compressive Properties of Rigid Cellular Plastics.

D. ASTM D6878/D6878M - Standard Specification for Thermoplastic Polyolefin-Based Sheet Roofing.

E. IBC - International Building Code.

F. UL (DIR) - Online Certifications Directory.

1.05 SUBMITTALS

A. Refer to Section 01 3300 for submittal procedures.

B. Product Data:

1. Submit roofing manufacturer's current roofing product brochure.

2. Submit roof insulation manufacturer's current product information brochure along with Roofing System Manufacturer's approval of roof insulation for use with their membrane to meet specified fire classification.

3. Submit evidence acceptable to the local Building Official that roof insulation does not require a thermal barrier.

4. Submit paver and pedestal manufacturer's current product data and installation instructions.

C. Shop Drawings – Single-Ply Roofing System:

1. Submit Roofing System Manufacturer's approved shop drawings showing roof plan limits of each different roofing system type, edge and termination conditions, penetrations and non-typical details and Request for Warranty form prior to job start.

2. Shop Drawings shall show each material in the roofing system from the structural roof deck up and its method of attachment.

D. Wind Load Design: Roofing System manufacturer shall provide wind load design for the roofing system based on the positive / negative wind load design criteria for this project as specified in the Performance Requirements and required by the IBC.

1. List positive and negative wind pressures.

2. List each component of the roofing system and method of attachment.

3. Adhered System: Provide adhesive type, coverage rate, size and spacing of adhesive bead systems.

E. Shop Drawings – Tapered Insulation:

1. Submit tapered insulation manufacturer's shop drawing showing tapered insulation layout, thicknesses and slopes required to achieve positive drainage over entire roof area.

F. Certifications and Approvals:

1. Submit certification from the Roofing System Manufacturer which certifies the Applicator is authorized to install the manufacturer's roofing system and lists foremen who have received training from the manufacturer along with the dates training was received.

2. Roofing System Manufacturer's approval of any part of the roofing assembly that is not manufactured directly by the roofing membrane manufacturer (including, but not limited to, the insulation board, tapered insulation package, mechanical fasteners, walkways, slip sheet or coverboard for Class A and B rating, pavers, pedestals, etc.).

3. Certification from the Roofing System Manufacturer indicating the fasteners proposed are capable of providing a static backout resistance of 10 inch pounds minimum when installed on the type of decking installed on this project.

4. Submit the UL (DIR) fire classification card for specific roofing system listing each material in roofing system required to meet specified fire classification.

G. Paver Sample: Submit one (1) full size sample of specified paver.

H. Warranty: Submit sample watertight warranty and certification of the manufacturer's warranty reserve.

I. Manufacturer's Inspection Report: Upon completion of the installed work, submit copies of the manufacturer's final inspection report to the Architect prior to the issuance of the manufacturer's warranty.

1.06 QUALITY ASSURANCE

A. The installed TPO membrane roofing system, including insulation, must achieve each of the following ratings:

1. Fire Classification: UL (DIR) Class C.

2. Design Wind Speed: 85 MPH wind speed in conformance with the requirements of International Building Code (IBC) Chapter 16 – Section 1609.

3. Underwriters Laboratories UL (DIR) 90 rated.

B. Roofing System Manufacturer: A company, with fifteen (15) years of experience manufacturing reinforced single-ply roofing systems with proven track record manufacturing single-ply roofing membranes. The manufacturer shall certify the scrim reinforced TPO membrane meets the physical properties specified.

C. Applicator: A company approved / authorized by Roofing System Manufacturer and specializing in single-ply roofing systems. Applicator shall have completed at least five (5) installations, similar in scope to this project, of mechanically attached, scrim reinforced, heat welded TPO single-ply installations, in the last year. Applicator must strictly comply with the manufacturer's current specifications and details.

D. Inspection: Upon completion of the Roofing System installation, a Technical Representative of the Roofing System Manufacturer shall inspect the installation to confirm that it has been installed according to the Manufacturer's specification and installation details required for this project.

1.07 SYSTEM DESIGN RESPONSIBILITY

A. Roofing System Design Responsibility: Single-ply roofing manufacturer is responsible for providing the technical design of the total roofing system, with associated materials, flashings, connections, details, etc. required to achieve a roofing installation that remains leak free for at least the duration of the warranty. Technical design by manufacturer shall be based upon and accommodate the materials, configuration, layout and design elements and requirements of the roofing system shown on the Contract Drawings and specified herein.

1. The shop drawings approved by the roofing membrane manufacturer are the Roofing System technical design drawings for use in construction. Roofing contractors bidding this roofing work shall base their bid on the requirements of the manufacturer's specific roofing system and details as it will appear on the shop drawings.

    a. Coordinate the fabrication and installation of sheet metal flashings and components which form a part of the roofing system with Section 07 6200 so that the completed roofing and flashing system is leak-free and conforms to the design requirements of the roofing membrane manufacturer.

2. Provide and / or approve materials used in the application of the roofing membrane system.

3. Approve installation methods used in the application of the roofing membrane system.

4. Provide clear instruction to the installer on:

    a. Environmental requirements for storage and installation.

    b. Approved installation requirements of the roofing materials.

    c. Installation sequence.

    d. Proper assembly of the materials into a roofing membrane system designed to provide a watertight roofing assembly.

5. Tapered Insulation Design: Provide a complete design of the tapered insulation over the entire roof area in conformance with the following requirements:

   a. The installed roofing surface shall measure not less than 1/4-inch per foot of slope from a level plane.

   b. Design shall take into account any slope built into the roofing deck / structure.

   c. Design tapered insulation so that the completed roofing installation does not trap or pond water.

6. Pedestal paver system shall be approved by the roofing system manufacturer. If a pedestal paver system is selected that is not approved by the roofing system manufacturer, notify the Architect and Owner for approval.

1.08 PRODUCT DELIVERY, STORAGE AND HANDLING

A. Deliver materials to the job site in manufacturer's original, unopened containers or wrappings with the manufacturer's name, brand name and installation instructions intact and legible. Deliver in sufficient quantity to permit work to continue without interruption.

B. Comply with the manufacturer's written instruction for proper material storage.

   1. Store materials, except membrane, between 60 degrees F and 80 degrees F in dry areas protected from water and direct sunlight. If exposed to lower temperature, restore to 60 degrees F minimum temperature before using.

   2. Store materials containing solvents in dry, well ventilated spaces with proper fire and safety precautions. Keep lids on tight. Use before expiration of their shelf life.

C. Insulation must be on pallets, off the ground and tightly covered with waterproof materials.

D. Any materials which are found to be damaged shall be removed and replaced at the applicator's expense.

1.09 WORK SEQUENCE

A. Schedule and execute work to coincide with dry weather, and to prevent leaks and excessive traffic on completed roof sections.

B. Care should be exercised to provide protection for the interior of the building and to ensure water does not flow beneath any completed sections of the membrane system.

1.10 PRE-INSTALLATION CONFERENCE

A. Prior to start of (TPO) single-ply roofing system installation, Contractor shall schedule a pre-installation conference at the job site to review the project conditions and installation requirements as specified in Section 07 2700 and per the following requirements:

1. Review the following:

a. Project requirements and submittals.

b. Installer's training requirements.

c. Substrate work and preparation.

d. Areas of potential conflict and interface.

e. Availability of (TPO) single-ply roofing materials and components.

f. Equipment.

g. Methods, procedures and sequencing requirements for full and proper installation, integration and protection.

B. Persons attending pre-installation conference shall include the Contractor, (TPO) single-ply roofing installer, sheet metal installer, (TPO) single-ply roofing system manufacturer's designated field service representative, Architect, and Owner.

1.11 JOB SITE PROTECTION

A. Do not overload any portion of the building, either by use of or placement of equipment, storage of debris, or storage of materials.

B. Protect against fire and flame spread. Maintain proper and adequate fire extinguishers.

C. Take precautions to prevent drains from clogging during the roofing application. Remove debris at the completion of each day's work and clean drains. At completion, test drains to ensure the system is free running and drains are watertight. Remove strainers and plug drains in areas where work is in progress. Install flags or other telltales on plugs. Remove plugs each night and screen drain.

D. Store moisture susceptible materials above ground and protect with waterproof coverings.

E. Remove traces of piled bulk materials and return the job site to its original condition upon completion of the work.

1.12 SAFETY

A. The Contractor shall be responsible for means and methods as they relate to safety and shall comply with applicable local, state and federal requirements that are safety related.

1.13 WORKMANSHIP

A. Applicators installing roofing system and related work shall be factory trained and approved by the manufacturer they are representing.

B. Work shall be of highest quality and in strict accordance with the manufacturer's published specifications and to the building owner's satisfaction.

C. There shall be a supervisor on the job site at times while work is in progress.

1.14 SPECIAL REQUIREMENT

A. Section 07 6200 Sheet Metal Work: Sheet metal fabricator and installer shall either be employees of the Section 07 5423 installer, or shall be an established architectural sheet metal company that is subcontracted directly to the Section 07 5423 installer.

1. Fabrication and installation of sheet metal installed in single-ply roofing system shall conform to the roofing manufacturer’s requirements for the roofing system provided.

1.15 ROOFING SYSTEM WARRANTY – LEAK FREE, MATERIALS AND LABOR, NO DOLLAR LIMIT

A. Roofing System Manufacturer Warranty: Upon successful completion of the project, and after post installation procedures have been completed, furnish the Owner with the roofing manufacturer’s twenty (20) year, no dollar limit (NDL) roofing system warranty. The warranty shall be a term type, without deductibles or limitations on coverage amount, and shall be issued at no additional cost to the Owner.

1. Warranty shall be from the Manufacturer of the membrane.

2. Warranty shall include the entire Roofing System including coverboard, insulation, plates, fasteners, adhesives, metal flashing attachment, sealants, pavers, and pedestals, etc.

3. Warranty shall cover both the labor and material cost of roofing replacement in the event of failure with no dollar limit including the removal and replacement of the pavers and pedestals.

4. Warranty shall contain no exclusion or limitation for improper installation, or damage from environmental contaminants; or damage from water that ponds or does not drain freely.

5. Pro-rated warranties shall not be accepted.

6. Warranty shall contain no exclusion or limitation for damage to Roofing System caused by sustained wind speeds of 85 MPH or less.

PART 2 PRODUCTS

2.01 ROOFING SYSTEMS, GENERAL

A. General: Unless otherwise approved in writing by the Roofing Systems Manufacturer, products (including insulation, coverboard, fasteners, fastening plates and edgings, adhesives, pavers, and pedestals) must be manufactured and supplied (or approved in writing) by the Roofing System Manufacturer and covered by the warranty.

B. Manufacturer / Product: Carlisle SynTec, Inc., *Sure-Weld Reinforced TPO* is the basis of design and the standard of quality, function, performance and appearance required for this project.

1. Carlisle SynTec, Inc.; *Sure-Weld Reinforced TPO* (specified, basis of design).

2. Products by other manufacturers may be acceptable, subject to their ability to meet or exceed this standard and provide products conforming with the requirements of the Drawings and this Specification.

3. Substitutions: Refer to Section 01 6000 for substitution procedures and requirements. Proposed substitutions must match specified product performance and colors.

2.02 TPO SINGLE-PLY ROOFING SYSTEM

A. MECHANICALLY FASTENED AND ADHERED TPO ROOFING SYSTEM: Provide mechanically fastened and adhered thermoplastic polyolefin (TPO) single-ply roofing system as follows:

1. Install air / vapor barrier directly over roof deck and seal-off the entire perimeter of the roof airtight.

2. Install one (1) layer of rigid foam roof insulation mechanically attached to roof deck as required to conform to windspeed and warranty requirements.

3. Fully adhere 1/2-inch coverboard to insulation as required to conform to windspeed and warranty requirements.

4. Install the single-ply roofing membrane over the coverboard and fully adhere in conformance with the manufacturer's installation requirements as required to conform to windspeed and warranty requirements.

5. Extend single-ply roofing membrane up and over the top of parapet walls and fully adhere in conformance with manufacturer's installation requirements.

6. Extend single-ply roofing membrane up the wall and under the exterior siding as shown on the Drawings and fully adhere in conformance with manufacturer's installation requirements.

7. Install protection mat over entire roof under pavers and pedestals.

8. Install pavers and pedestals over protection mat.

B. ROOFING MEMBRANE: Membrane shall be 60 mil overall thickness, reinforced, thermoplastic polyolefin based sheet conforming to ASTM D6878/D6878M and the following physical properties:

1. Color: White.

C. COVERBOARD: 1/2-inch rigid, roof insulation panel composed of a high-density, closed-cell polyisocyanurate foam core laminated to a premium-performance, coated-glass fiber-mat facer.

1. Manufacturer / Product: Carlisle SynTec, Inc., *SecurShield HD* is the basis of design and the standard of quality, function and performance required for this project.

a. Carlisle SynTec, Inc.; *SecurShield HD* (specified, basis of design).

b. Products by other manufacturers may be acceptable, subject to their ability to meet or exceed this standard and provide products conforming with the requirements of the Drawings and this Specification.

c. Substitutions: Refer to Section 01 6000 for substitution procedures and requirements. Proposed substitutions must match specified product performance.

D. RIGID ROOF INSULATION (UNIFORM THICKNESS and TAPERED): Rigid foam board insulation consisting of a closed cell polyisocyanurate foam core bonded on each side to fiber reinforced facers. Conform to ASTM C1289, Type II, Class 1, Grade 2 and the following:

1. Application:

a. Uniform Thickness Insulation: Apply insulation in one (1) layer to achieve the R-value noted on the Drawings.

b. Tapered Insulation: Apply over uniform thickness insulation in number of layers required to achieve required slope.

2. Board Edges: Square.

3. Compressive Strength per ASTM D1621: 25 psi minimum.

4. Manufactured / approved by Roofing System Manufacturer.

5. Thermal Value Standard: R-Value shall be based on Long Term Thermal Resistance Values per ASTM C1289 which provides for a fifteen (15) year time weighted average.

6. Total R-Value: As indicated on the Drawings.

7. Thermal Barrier: Insulation board shall be tested and qualified as not requiring a separate thermal barrier per IBC requirement, provide test data acceptable to Building Official upon request.

8. Tapered Insulation: Design the tapered insulation package configuration and slopes for positive water drainage and to accommodate the specific conditions found on this project.

   a. NOTE: Slopes shown on Drawings are minimum as measured from a level plane (not the slope of the structural deck). Where structural deck slopes, provide tapered with additional slope to overcome slope of deck and provide positive water flow to drains.

E. AIR / VAPOR BARRIER: 40 mil thick composite consisting of 35 mil self-adhering rubberized asphalt membrane laminated to a 5 mil UV resistant poly film with an anti-skid surface.

1. Manufacturer / Product: Carlisle SynTec, Inc., *Carlisle 725R Air and Vapor Barrier / Temporary Roof* is the basis of design and the standard of quality, function and performance required for this project.

   a. Carlisle SynTec, Inc.; *Carlisle 725R Air and Vapor Barrier / Temporary Roof* (specified, basis of design).

   b. Products by other manufacturers may be acceptable, subject to their ability to meet or exceed this standard and provide products conforming with the requirements of the Drawings and this Specification.

   c. Substitutions: Refer to Section 01 6000 for substitution procedures and requirements. Proposed substitutions must match specified product performance.

2. Provide components and accessories required for a complete and functional air, vapor and water barrier system supplied by a single manufacturer, complete with manufacturer designed installation details for each condition found on the project.

3. Termination Bar: 2-inch wide 18 gauge galvanized sheet metal, shop bend one edge at 20 degree angle for 1/2-inch width to give the bar some stiffness; provide in 10 foot lengths. Punch holes for fasteners at 8-inches on center maximum and within 2-inches of ends.

F. FASTENERS AND PLATES: Provide Roofing System Manufacturer's recommended fasteners and plates to conform to the specific requirements of this project.

G. PRIMERS: Roofing System Manufacturer's recommended primer for each different substrate and application.

H. ADHESIVES: Provide and of the Roofing System Manufacturer's recommended adhesives as required to conform to windspeed and warranty requirements and substrate considerations for this project.

I. VENT AND PIPE FLASHING: Premolded TPO pipe seal with stainless steel clamping ring and sealant for watertight connection to pipe; approved by membrane manufacturer. Field fabricated flashings are not acceptable.

J. TPO-CLAD SHEET METAL: Provide to Section 07 6200 for fabrication and installation at thru-wall scuppers and wherever required by Roofing System Manufacturer.

1. Manufacturer / Product: Carlisle SynTec, Inc., *Sure-Weld Coated* is the basis of design and the standard of quality, function, performance and appearance required for this project.

a. Carlisle SynTec, Inc.; *Sure-Weld Coated* (specified, basis of design).

b. Products by other manufacturers may be acceptable, subject to their ability to meet or exceed this standard and provide products conforming with the requirements of the Drawings and this Specification.

c. Substitutions: Refer to Section 01 6000 for substitution procedures and requirements. Proposed substitutions must match specified product performance and colors.

K. CLEANERS: Provide Roofing System Manufacturer's recommended cleaners to conform to the specific requirements of this project.

L. MISCELLANEOUS: Provide any other materials / accessories required for a complete Roofing System conforming to the Roofing Systems Manufacturer's requirements and the specific conditions found on this project.

M. PROTECTION MAT: Nonwoven polypropylene protection fabric.

1. Manufacturer / Product: Carlisle SynTec, Inc., *300HV* is the basis of design and the standard of quality, function and performance required for this project.

a. Carlisle SynTec, Inc.; *300HV* (specified, basis of design).

b. Products by other manufacturers may be acceptable, subject to their ability to meet or exceed this standard and provide products conforming with the requirements of the Drawings and this Specification.

c. Substitutions: Refer to Section 01 6000 for substitution procedures and requirements. Proposed substitutions must match specified product performance.

N. WOOD NAILERS AND INSULATION STOPS: Specified in Section 06 1000.

O. PAVERS AND PEDESTALS:

1. Pedestals: Product must be approved by the roofing manufacturer to maintain roof warranty.

a. Manufacturer / Product: Hanover Architectural Products, *Compensator or Elevator Pedestal Systems* are the basis of design and the standard of quality, function and performance required for this project.

1) Hanover Architectural Products; *Compensator or Elevator Pedestal Systems* (specified, basis of design).

2) Products by other manufacturers may be acceptable, subject to their ability to meet or exceed this standard and provide products conforming with the requirements of the Drawings and this Specification.

3) Substitutions: Refer to Section 01 6000 for substitution procedures and requirements. Proposed substitutions must match specified product performance.

2. Pavers: Product must be approved by the roofing manufacturer to maintain roof warranty.

a. Manufacturer / Product: Hanover Architectural Products, *Prest Pavers* are the basis of design and the standard of quality, function, performance and appearance required for this project.

1) Hanover Architectural Products; *Prest Pavers* (specified, basis of design).

2) Products by other manufacturers may be acceptable, subject to their ability to meet or exceed this standard and provide products conforming with the requirements of the Drawings and this Specification.

3) Substitutions: Refer to Section 01 6000 for substitution procedures and requirements. Proposed substitutions must match specified product performance and colors.

b. Colors: _____.

3. Accessories: Provide base pads at each pedestal to protect the roofing membrane as recommended by the roofing manufacturer.

PART 3 EXECUTION

3.01 COORDINATION

A. Review, coordinate and accommodate work of other sections that interface with, affect or are affected by the work of this section so as to facilitate the execution of the overall Work of this project in a coordinated and efficient manner.

B. Coordinate installation of sheet metal flashings and scupper / conductor heads with other sections to achieve watertight installation that conforms to membrane manufacturer's requirements.

C. Coordinate timing of installation and protection of completed work. Roofing and insulation systems are not suitable for heavy traffic, material or work platforms, and can be damaged or abused by such activities. Roofing installation shall take place after deck penetrations, curbs, and above roof work is complete.

D. Coordinate installation of roof drains with Division 22 to assure drain rim is below top of insulation to allow positive drainage and no ponding water around drain.

E. Coordinate installation of air / vapor barrier with installation of wood sheathing to prevent sheathing from being exposed to the weather and from getting wet.

F. Coordinate roofing work to coincide with dry weather.

3.02 INSPECTION

A. Inspect roof deck and conditions and confirm there are no conditions that are unacceptable for installation of the roofing system specified.

B. Inspect roof deck and confirm that areas have sufficient slope for positive flow of water to drains, scuppers, and gutters.

C. Beginning of installation indicates installer's acceptance of substrate and conditions.

3.03 PREPARATION

A. Clean dirt and debris from roofing surface.

3.04 INSTALLATION – TPO SINGLE-PLY ROOFING SYSTEM

A. GENERAL: Comply with manufacturer's approved shop drawings and written installation instructions for installing the mechanically fastened single-ply roofing system conforming to design windspeed and warranty requirements.

B. AIR / VAPOR BARRIER:

1. Install air / vapor barrier over entire roof deck, continuous and unbroken, in accordance with manufacturer's installation instructions.

a. Install to a clean and dry substrate in accordance with manufacturer's installation instructions to achieve an airtight and watertight barrier installation.

1) Roll the entire surface of the barrier down tight to the substrate using a heavy roller as recommended by the manufacturer to eliminate air bubbles, fishmouths and so as to achieve a good bond to substrate.

b. Perimeter Sealing: Seal the barrier system at the roof perimeter to the wall air barrier to achieve an airtight connection.

1) Seal with termination bar attached with screws at 8-inches on center.

c. Penetration Sealing: Extend barrier system up onto pipe, conduit, duct penetrations 6-inches minimum and seal airtight as recommended by manufacturer; secure the top edge with a stainless steel clamp or aluminum termination bar fastened with screws to achieve a secure seal to the penetrating item.

d. The completed barrier system shall provide a continuous unbroken roof air, vapor and water barrier free of leaks in the field, at the perimeter or at penetrations.

e. Barrier systems shall not be left exposed for longer that recommended by the system manufacturer.

f. Limit construction traffic over the barrier system and provide temporary protection to prevent damaging the barrier system.

g. Any damage to the barrier system must be repaired as recommended by the manufacturer prior to installation of the roofing system.

C. RIGID ROOF INSULATION and COVERBOARD: Install flat and tapered insulation in accordance with layout shown on shop drawing and as required to achieve positive roof drainage over the air / vapor barrier and roof decks with boards butted tightly together. Stagger joints between insulation layers and between adjacent sheets.

1. Install coverboard over insulation with boards butted tightly together. Stagger coverboard joints from insulation joints.

2. Secure insulation to the substrate with the required mechanical fasteners in accordance with the Roofing System Manufacturer's requirements for wind speed warranty specified.

3. Tapered Insulation: Install in accordance with layout shown on shop drawing and as required to achieve positive roof drainage.

4. Secure coverboard to the substrate with the required adhesive in accordance with the Roofing System Manufacturer's requirements for wind speed warranty specified.

D. SINGLE-PLY ROOFING MEMBRANE: Install fully adhered fastened single-ply roofing membrane over coverboard in accordance with manufacturer's installation instructions and approved shop drawings as required to achieve leak free roofing membrane.

1. Seal seams watertight in accordance with manufacturer's instructions.

2. Membrane shall lie flat on substrate, free of any wrinkles or misfit.

3. Parapet Walls: Extend membrane up, over top and down outside face overlapping and sealing to the air / water / vapor / thermal barrier.

a. Prime face of wall as recommended by manufacturer for type of material and fully adhere membrane.

4. Roof / Wall Transitions: Extend membrane up the wall and under the exterior siding as shown on the Drawings.

a. Prime face of wall as recommended by manufacturer for type of material and fully adhere membrane.

E. EDGE, PENETRATIONS AND TERMINATION DETAILS: Comply with manufacturer's details as noted on the shop drawing.

F. DRAINS: Shave insulation around roof drains to increase slope and provide positive drainage across seams and overlaps into drain.

1. Overflow Drains: Install insulation and membrane to prevent any water flow into overflow drains under normal conditions; overflow drains shall only take water that backs up as a result of the main roof drains being plugged.

G. PROTECTION MAT: Install protection mat loose-laid under pedestals and pavers.

H. PAVERS AND PEDESTALS: Install pedestal paver system in accordance with the manufacturer's instructions. Final installed system shall be level.

3.05 PROTECTION AND CLEANING

A. Protect membrane in progress and completed membrane from foot and vehicular traffic.

B. Clean soiled surfaces, remove trash and debris, and leave project site in a clean condition.

3.06 FIELD QUALITY CONTROL

A. Contractor Quality Control: Employ / assign quality control personnel to monitor the work of this section for conformance to the requirements of the Contract Documents and to good construction practices.

1. Contractor is solely responsible for managing and controlling the quality of the work and conformance with the requirements of the Contract Documents.

B. Manufacturer's Field Service: Upon completion of the installation, have the manufacturer's representative make an inspection to ascertain that the roofing membrane system has been installed according to manufacturer's approved specifications and details.

C. Warranty Inspection: Provide manufacturer's inspection for acceptance for warranty.

1. Correct / replace any defective roofing materials or installation identified in the warranty inspection.

D. Rejection of Defective Work: Areas having excessive patching as a result of damage to the membrane or faulty installation may be rejected by the Architect; replace the membrane completely in these areas.

END OF SECTION

SECTION 07 6200

SHEET METAL FLASHING AND TRIM

PART 1 GENERAL

1.01 RELATED DOCUMENTS

A. Drawings and general provisions of the Contract, including General Conditions, Supplementary Conditions and Divisions 00 and 01 Specification Sections, apply to work of this section.

1.02 SECTION INCLUDES

A. Sheet Metal Receiver and Counter Flashings.

B. Sheet Metal Copings / Cap Flashings.

C. Sheet Metal Eave Flashing.

D. Sheet Metal Flashings / Trim.

E. Continuous Sheet Metal Gutters.

F. Sheet Metal Downspouts.

G. Sheet Metal Flashing at Window Heads, Louver Heads, and Door Heads.

H. Sheet Metal Window Sill Pans, Louver Sill Pans, and Sill Pans.

I. Sheet Metal Fillers and Miscellaneous Fabrications.

1.03 REFERENCES

A. References shall be the edition current as of the date of the Contract Documents.

B. ASTM A792/A792M - Standard Specification for Steel Sheet, 55% Aluminum-Zinc Alloy-Coated by the Hot-Dip Process.

C. ASTM D2244 - Standard Practice for Calculation of Color Tolerances and Color Differences from Instrumentally Measured Color Coordinates.

D. ASTM D4214 - Standard Test Methods for Evaluating the Degree of Chalking of Exterior Paint Films.

E. ASTM D4586/D4586M - Standard Specification for Asphalt Roof Cement, Asbestos-Free.

F. NRCA (RM) - The NRCA Roofing Manual.

G. NRCA (WM) - The NRCA Waterproofing Manual.

H. SMACNA (ASMM) - Architectural Sheet Metal Manual.

1.04 SUBMITTALS

A. Refer to Section 01 3300 for submittal procedures.

B. Product Data: Submit manufacturer's product data for the following:

1. Prefinished Sheet Metal.

2. Continuous Gutters.

3. Fasteners.

4. Sealant.

C. Shop Drawings: Submit shop drawings for review prior to fabrication, include the following:

1. Roof details showing each flashing condition keyed to the roof plan.

2. Profile and dimensions of each sheet metal item, gauge, type / finish of sheet metal, fastener type, location and spacing.

3. Corner and end details for each different flashing type.

4. Downspouts section and details of bends, hangers and connections to gutter outlet tube and to storm drainage system.

5. Fastener material, type and size for each condition.

6. Sealant details showing joint configuration, sealant types and location for each condition.

D. Color Samples For Prefinished Sheet Metal: Submit two (2) 3-inch x 4-inch color samples of each standard color selected on the Drawings (actual paint finish on sheet metal).

E. Installer Qualification (Upon Request Only): Provide a list of at least ten (10) recently completed projects of similar design and scope with addresses and contact phone numbers for the building Owner and Architect within 150 miles of this project.

1.05 QUALITY ASSURANCE

A. Fabricator / Installer Qualifications:

1. Minimum of five (5) years of experience in fabrication and installation of architectural sheet metal similar in material, design, and scope to this project with a record of successful in-service performance;

2. Qualified Workers: Only skilled, journeyman sheet metal workers that have completed five (5) years of training through a state approved apprenticeship program that is specific to the Sheet Metal Industry are approved to install the work of this section. Provide the names of each sheet metal worker on the project along with documentation of successful completion of a sheet metal training program upon request.

3. Provide list of at least ten (10) recently completed projects with addresses within 150 miles of this project upon request.

B. Workmanship shall be of the best quality; installed work shall be straight and true with neat corners and terminations, free of any visual defects; installation shall be fabricated and installed to inherently shed water without reliance on sealant and be permanently watertight.

1.06 PRE-INSTALLATION CONFERENCE

A. Participate in the Pre-Installation Conference as specified in Section 07 2700.

1.07 SPECIAL REQUIREMENT

A. Section 07 6200 Sheet Metal Work: Sheet metal fabricator and installer shall either be employees of the Section 07 4000 installer or shall be an established architectural sheet metal company that is subcontracted directly to the Section 07 4000 installer.

1. Fabrication and installation of sheet metal installed in single-ply roofing system shall conform to the roofing manufacturer's requirements for the roofing system provided.

2. Fabrication and installation of sheet metal installed in asphalt roofing system shall conform to the roofing manufacturer's requirements for the roofing system provided.

3. Fabrication and installation of sheet metal installed in metal roofing system shall conform to the roofing manufacturer's requirements for the roofing system provided.

B. The prefinished sheet metal used for the project shall be from one manufacturer so that the selected colors are consistent from one fabricated item to another. The use of multiple manufacturers is not allowed.

1.08 WARRANTY / GUARANTEE

A. Contractor's Warranty: Warrant the work of this section against defective materials and / or workmanship, to remain watertight and weatherproof with normal usage for three (3) years following Project Substantial Completion date. Correct any flashing or sheet metal item that is defective, improperly installed or leaking at no cost to the Owner.

B. Manufacturer's forty (40) year Prefinished Sheet Steel Warranty:

1. Architectural Fluorocarbon Finish Warranty:

   a. Will be free of fading or color change in excess of 5 Hunter delta-E units as determined by ASTM D2244.

   b. Will not chalk in excess of numerical rating of 8 when measured in accordance with standard procedures specified in ASTM D4214 method A D659.

   c. Will not peel, crack, chip, or delaminate.

2. Metal substrate will not rupture, fail structurally, or perforate for period of twenty-five (25) years.

PART 2 PRODUCTS

2.01 MATERIALS

A. Prefinished Sheet Metal: Steel sheet conforming to ASTM A792/A792M with minimum yield of 50,000 psi and AZ50 (Zincalume or Galvalume) protective coating.

1. Finish Coating shall be a premium fluoropolymer coating with minimum of 70% Kynar 500 or Hylar 5000 base resin, factory-applied, oven baked and applied under controlled condition; 1 mil dry film thickness minimum (exclusive of primer); thirty (30) year warranty.

2. Colors: _____.

3. Protective film: Provide strippable plastic film, applied to finish of coil stock before forming, or plastic interleaf, applied to panel after forming.

4. Manufacturer / Product: Products by AEP Span are the basis of design and the standard of quality, function, performance and appearance required for this project. Material shall be manufactured by the same manufacturer providing metal roofing in Section 07 4000 .

   a. AEP Span (specified, basis of design).

   b. Products by the following manufacturers may be acceptable, subject to their ability to meet or exceed this standard and provide products conforming with the requirements of the Drawings and this Specification:

      1) Bryer Company.

      2) Metal Sales.

      3) Pac-Clad Petersen.

      4) Taylor Metal Products.

c. Substitutions: Refer to Section 01 6000 for substitution procedures and requirements. Proposed substitutions must match specified product performance and colors.

B. TPO-Clad Sheet Metal: TPO coating applied to G90 galvanized sheet metal, heat-weldable, 24 gauge, match color of single ply roofing membrane provided by roofing manufacturer specified in Section 07 5423.

1. Obtain from Section 07 5423 for fabrication and installation wherever required by roofing manufacturer or shown on Drawings.

C. Welded Stainless Steel Wire Mesh: Type 304 welded stainless steel wire mesh, 12 wires per inch, 0.023-inch wire diameter, 52% open area.

1. Manufacturer / Product: TWP, Inc., *12 Mesh T304 Stainless .023" Wire Dia* is the basis of design and the standard of quality, function and performance required for this project.

a. TWP, Inc.; *12 Mesh T304 Stainless .023" Wire Dia* (specified, basis of design).

b. Products by other manufacturers may be acceptable, subject to their ability to meet or exceed this standard and provide products conforming with the requirements of the Drawings and this Specification.

c. Substitutions: Refer to Section 01 6000 for substitution procedures and requirements. Proposed substitutions must match specified product performance.

D. Galvanized Perforated Sheet Metal: 20 gauge G-90 galvanized steel sheet with 3/32-inch round perforations at 3/16-inches on center in staggered pattern; 23% open area.

E. PVC Pipe and Fittings: Schedule 40 PVC pipe and drainage fittings.

1. Provide transition fitting for connection to underground storm drain system.

2. Provide PVC primer and cement for cementing fittings watertight.

2.02 ACCESSORIES

A. Fasteners: Fasteners shall be manufactured in the United States or Canada.

1. Fasteners for Prefinished Sheet Metal Fabrications:

a. Exposed Condition – Wood or Sheet Metal Substrate: Provide color coated galvanized fasteners with rubber gasketed self-sealing head, match color of prefinished sheet metal.

b. Exposed Condition – Masonry or Concrete Substrate: 1/4-inch diameter nail-in expansion anchor with mushroom style head, and body formed of Zamac 7 alloy, Type 304 stainless steel nail; 1-1/2-inch minimum embedment; seal head with sealant.

1) Manufacturer / Product: Rawlplug, *Zamac Nailin* is the basis of design and the standard of quality, function and performance required for this project.

a) Rawlplug; *Zamac Nailin* (specified, basis of design).

b) Products by other manufacturers may be acceptable, subject to their ability to meet or exceed this standard and provide products conforming with the requirements of the Drawings and this Specification.

c) Substitutions: Refer to Section 01 6000 for substitution procedures and requirements. Proposed substitutions must match specified product performance.

2) Powder / power driven fasteners are not permitted.

c. Concealed Condition: Hot dipped galvanized nails or screws or expansion anchors with self-sealing neoprene head as appropriate for the substrate.

1) Powder / power driven fasteners are not permitted.

2. Fasteners for Continuous Cleats (Concealed): Hot dipped galvanized screws, nails or expansion anchors as appropriate for the substrate.

a. Powder / power driven fasteners are not permitted.

3. Fasteners for Downspout Brackets:

a. Into Wood Framing: #12 hot-dipped galvanized steel wood screws; minimum 1-inch embedment in wall framing.

b. Into Masonry or Concrete: Hot-dipped galvanized steel or stainless steel expansion anchors, 1/4-inch diameter (minimum), 1-3/4-inch embedment (minimum).

1) Powder / power driven fasteners are not permitted.

B. Tape for Separation between Dissimilar Metals: 10 mil PVC adhesive backed tape.

C. Sealant:

1. Exposed Joint Condition and Gutter Seal: Silicone sealant in color matching sheet metal color.

   a. Manufacturers / Products: Subject to their ability to conform to the requirements of the Drawings and this Specification, the following manufacturers / products may be provided:

      1) DowSil; *795 Silicone Building Sealant.*

      2) GE Momentive; *Silpruf SCS2000.*

      3) Substitutions: Refer to Section 01 6000 for substitution procedures and requirements. Proposed substitutions must match specified products performance and colors.

2. Concealed Lap Joint Condition: Butyl, single component, TT-S-001657, Type I.

   a. Manufacturer / Product: Tremco, *Butyl Sealant* is the basis of design and the standard of quality, function and performance required for this project.

      1) Tremco; *Butyl Sealant* (specified, basis of design).

      2) Products by other manufacturers may be acceptable, subject to their ability to meet or exceed this standard and provide products conforming with the requirements of the Drawings and this Specification.

      3) Substitutions: Refer to Section 01 6000 for substitution procedures and requirements. Proposed substitutions must match specified product performance.

D. Plastic Cement: Asphalt cutback mastic conforming to ASTM D4586/D4586M Type II.

2.03 FABRICATION

A. General:

1. Field measure and verify site conditions prior to fabrication, accommodate field conditions.

2. Fabricate in accordance with SMACNA (ASMM), NRCA (RM), NRCA (WM) and as required by roofing manufacturer and siding manufacturer to profiles shown on Drawings (where conflicts exist, the most restrictive requirement shall apply).

3. Form sections true to shape, accurate in size, square, and free from distortion or defects.

4. Furnish in minimum 10 foot lengths.

5. Hem exposed edges 1/2-inch on underside.

6. Lap joints shall be fabricated to allow 6-inches minimum overlap.

7. Fabricate head flashings in walls (at windows, doors, louvers, etc.) with end dams to prevent water running off ends and behind siding.

8. Shop fabricate items including corners, end terminations and special conditions for neat appearance, field bending and fabrication is not acceptable.

9. Protect prefinished metal from scratches or damage during fabrication.

10. End conditions, corners, transitions, terminations, and changes in the plane or direction of flashings, copings, gutters, and other sheet metal fabrications shall be custom fit and fabricated to accommodate field conditions and to provide a weather-lapped, watertight assembly and transition. Workmanship and custom fabrications shall conform to similar conditions found in SMACNA (ASMM) and to good sheet metal fabrication practice and shall not rely solely on sealant for their watertight integrity.

B. Receiver and Counter Flashing: Fabricate to match configuration shown on the Drawings from prefinished sheet metal, 24 gauge or as shown on Drawings.

1. Lay out and fabricate for 6-inch lap joints.

2. Cut back hem and fabricate laps with male and female ends to allow for thickness of metal and sealant for proper fit and flush appearance.

3. Fabricate for tight spring action contact to roofing / wall behind; provide wind restraint clips at bottom of counter flashing where tight spring fit cannot be achieved.

4. Counter Flashing Corners: Fabricate watertight with neat appearance, bend at corner and extend past corner at least 12-inches.

C. Copings / Cap Flashings: Fabricate to match configuration shown on the Drawings and SMACNA (ASMM) Figure 3-4A and 3-4G from prefinished sheet metal.

1. Provide continuous 22 gauge cleat to lock into hem on exposed outside face.

2. Fasten concealed inside face with screw fasteners.

3. Gauge:

a. Coping widths up to 18-inch: 22 gauge.

b. Coping widths over 18-inches: 20 gauge.

4. Seams: 1-inch high standing seam.

5. Outside Corners: Bend outside vertical face to form corner, overlap top and seal watertight.

6. Inside Corners: Provide 12-inch wide backup metal to support and align ends / corners of flashing; miter cut flashing neatly with hairline crack.

D. Eave Flashing: Fabricate to match configuration shown on the Drawings from prefinished sheet metal, 24 gauge.

1. Lay out and fabricate for 6-inch lap joints.

2. Cut back hem and fabricate laps with male and female ends to allow for thickness of metal and sealant for proper fit and flush appearance.

3. Shop fabricate outside corners for neat appearance.

E. Flashing / Trim: Fabricate to match profiles / configurations shown on Drawings from 24 gauge factory prefinished sheet metal.

1. Slope horizontal leg of flashings to provide positive water drainage.

2. Provide end dams at head and sill flashings to prevent water from leaking off end of flashing behind siding / trim.

F. Continuous Gutters (Seamless): Fabricate to match gutter size and configuration / profile shown on Drawings (similar to SMACNA (ASMM) Style I, Figure 1-2) from prefinished sheet metal; minimum 22 gauge.

1. Fabricate on site in continuous full length (seamless) gutter sections as shown / required for each roof eave condition using a continuous roll-formed gutter machine.

a. Sectional gutters with sealant joints are not acceptable.

2. Gutter Profile / Dimensions: Refer to Drawings.

a. Continuous Gutters with similar profile, dimensions and capacity will be considered, submit profile and dimensions to Architect for review in accordance with Section 01 6000.

3. Gutter Thermal Movement: Allow space for thermal expansion / contraction of gutter when fabricating gutters between fixed points or with gutter return around corner to prevent buckling or pulling apart of corner joints; refer to SMACNA (ASMM) for recommended allowance for expansion / contraction based on metal type, gutter length and 100 degree F temperature differential.

a. Anchor Points: Screw attach gutter to eave hangar flashing at a single location mid-point of gutter length or as noted on Drawings to allow gutter expansion / contraction in both directions from fixed anchor point.

4. Corners: Miter cut and overlap corners.

a. Seal watertight with Gutter Sealant.

b. Install solid head rivets for secure connection.

5. End Closures: Provide watertight end closures, fabricate to fit gutter profile:

a. Seal watertight with Gutter Sealant.

6. Expansion Joints: Fabricate butt type gutter expansion joints per SMACNA (ASMM) Figure 1-7 with watertight end closures and cover plate matching gutter profile as required to accommodate expansion / contraction of gutter:

a. Seal watertight with sealant.

7. Outlet Tubes: Provide 4-inch long round drain outlet tubes at each downspout location fabricated with turned flange top per SMACNA (ASMM) Figure 1-24C; seal and rivet for watertight joint; size diameter to fit easily into downspout pipe. Install in gutter similar to SMACNA (ASMM) Figure 1-33D.

a. Seal lap joint watertight with Gutter Sealant and attach securely to gutter with solid head rivets.

8. Gutter Straps: Provide 22 gauge prefinished sheet metal straps at 30-inches on center and locked into front seams on gutter and nailed into roof eave.

9. Downspout Strainers: Provide strainers at each downspout outlet fabricated from hot-dipped galvanized wire fabricated to match outlet tube size and configuration and to fit snugly down into outlet and be easily removable for cleaning, Refer to SMACNA (ASMM) Figure 1-24D.

G. Downspouts and Supports: Fabricate downspouts extending between drain outlet tube at gutter and storm drain system on grade and splash block / pan / pad; fabricate fittings required to accommodate conditions.

1. Size(s) as shown on Drawings.

2. Downspouts: Fabricate from 24 gauge prefinished galvanized sheet steel, refer to Drawings for layout.

3. Layout and cut downspout for neat installation; align plumb and square with walls; slope horizontal sections down at 1/2-inch per foot slope.

4. Cleanouts: Provide PVC DWV flush cleanout tee fittings at bottom or each downspout.

5. Downspout Brackets: Fabricate from prefinished sheet metal as shown on Drawings, 20 gauge and with equal spacing not exceeding 5 to 6 feet or as indicated on Drawings.

6. Downspout Splash Pan: Fabricate from 24 gauge prefinished sheet metal per SMACNA (ASMM) Figure 1-36.

H. Flashing at Window Heads, Louver Heads, and Door Heads: Fabricate to match profiles / configurations shown on Drawings from 24 gauge factory prefinished sheet metal.

1. Slope horizontal leg of flashings to provide positive water drainage.

2. Provide end dams at head and sill flashings to prevent water from leaking off end of flashing into rainscreen cavity behind siding / cladding.

I. Window Sill Pans, Louver Sill Pans, and Sill Pans: Fabricate to match profile / configuration shown on Drawings from 24 gauge factory prefinished sheet metal.

1. Sills shall extend full depth to interior face of window frame and louver frame.

2. Coordinate back dam location to align directly behind interior face of window frame and louver frame for proper fit.

3. Provide end dams and back dam to prevent water from leaking into wall assembly or building interior.

a. Connect back dam and end dam at intersecting corners by overlapping a tab and riveting or spot welding together; seal lap joint and corner watertight with silicone sealant.

4. Hem exposed edge 1/2-inch.

J. Sheet Metal Fillers and Miscellaneous Fabrications: Fabricate from 22 gauge prefinished galvanized sheet steel to match configuration shown on the Drawings.

1. Field verify dimensions and connections.

PART 3 EXECUTION

3.01 COORDINATION

A. Review, coordinate and accommodate work of other trades that interface with, affect or are affected by the work of this section so as to facilitate the execution of the overall Work of this project in a coordinated and efficient manner.

B. Coordinate installation of wall flashings with Section 07 2719 for proper installation sequence and weather-lapped installation.

C. Coordinate installation of sheet metal flashings with Section 07 4000 for proper sequence and for watertight assembly.

D. Coordinate installation of sheet metal flashings with Section 07 5423 for proper sequence and for watertight assembly.

E. Coordinate gutter outlet tube location to align plumb and centered over storm drainage inlet pipe at ground level and splash block / pan / pad.

3.02 PREPARATION

A. Field verify that existing conditions and substrate layout are acceptable and comply with Drawing layout.

B. Report any variations, unacceptable substrates / conditions and potential problems.

C. Do not start work until unsatisfactory conditions have been corrected.

D. Start of installation indicates acceptance of substrate and conditions.

3.03 INSTALLATION – GENERAL

A. Installation shall conform to this section and the Drawings, the roofing and siding manufacturer's requirements, SMACNA (ASMM) and NRCA (RM) (where conflicts exist, the most restrictive requirement shall apply).

B. Protect prefinished metal from scratches or damage during fabrication.

C. Separate dissimilar metals with two (2) wraps / layers of PVC tape.

3.04 INSTALLATION – FLASHINGS

A. Install flashings to achieve a weathertight, leak-free installation.

B. Install flashings straight and true with neat appearance.

C. Lap Joints: Lap 6-inches minimum and seal with two heavy beads of butyl sealant just prior to making lap;

1. Clean metal surfaces to be sealed thoroughly with solvent just prior to sealant application;

2. Trim off back of hem to allow tight interface and proper fit.

3. Flashing shall fit tight to each other, free of any gaps or misfit.

D. Fasten flashings to substrate securely using specified fasteners sized to hold flashings securely and as recommended by manufacturer for substrate and condition.

1. Powder / power actuated fasteners are not permitted.

E. Fasteners shall be concealed wherever possible, seal exposed fasteners watertight.

3.05 INSTALLATION – COPINGS / CAP FLASHINGS

A. Install continuous cleat on exterior side of wall straight and true and fasten securely at 12-inches on center maximum;

B. Connect horizontal seams with 1-inch standing seam; weather-lap vertical joints 6-inches and seal watertight, cut off back of hem to allow proper fit;

C. Secure interior side with exposed fasteners spaced at no more than 30-inches apart.

D. Installation shall be completely watertight and free of any looseness or movement.

3.06 INSTALLATION – SILL PANS

A. Set sill pans in a continuous bed of sealant to provide an airtight and watertight connection to the sill member.

3.07 INSTALLATION – GUTTERS

A. Install straight and true and as required to achieve a watertight, leak-free installation.

B. Connect to support structure securely to provide support when completely full of water without deflection, sagging or overstressed connections.

C. Construct watertight joints, corners and end closures as described under Fabrication in this section.

D. Install drain outlet directly above each downspout location to allow installation of downspout plumb and free of offsets.

E. Install downspout strainers at each downspout.

3.08 INSTALLATION – DOWNSPOUTS

A. Install downspouts plumb and square with building, place in location shown on Drawings.

B. Hold horizontal downspout sections as high as possible.

C. Cut and fit downspouts accurately, fabricate watertight joints. Extend downspout into storm drain line at bottom and to splash block / pan / pad.

1. Attach downspout to wall securely with mounting brackets attached with fasteners appropriate for the wall substrate.

a. Lay out mounting brackets so that downspouts have matching symmetrical appearance. Spacing of brackets, not more than 5 or 6 feet on center (vertically) between brackets, or as indicated on the Drawings.

b. Mounting bracket shall hold downspout pipe firmly in place without slippage or movement.

3.09 INSTALLATION – SEALANT

A. Install sealant as specified in Section 07 9000.

1. Exposed Sealant Joints: Clean and prime surfaces to be sealed in accordance with sealant manufacturer’s instructions. Install backer rod and sealant in accordance with the sealant manufacturer's installation requirements to achieve the proper sealant performance. Install sealant so that width, shape, bonding width and width to depth ratios conform to sealant manufacturer's joint design recommendations based on the amount of movement (expansion / contraction) anticipated at each joint condition to achieve a permanently watertight joint.

2. Concealed (Lap) Sealant Joints: Clean and prime surfaces to be sealed in accordance with sealant manufacturer’s instructions. Install two continuous beads of butyl sealant (primary and secondary) at each lap joint to achieve a watertight connection.

3. Exposed Fastener Heads: Where fastener heads are exposed to the weather, use self-sealing type.

3.10 WORKMANSHIP

A. Sheet metal work shall be installed using the best workmanship, including but not limited to the following:

1. Prefinished surfaces of sheet metal free of scratches, dents or damage.

2. Joints and connections shall not rely on sealant for permanent watertight integrity.

3. Flashings and Copings shall run straight and true, parallel with building lines.

4. Fabricated items fit field conditions exactly without any element requiring force to install or being too large for the condition.

5. Downspouts shall be plumb and straight.

6. Joints shall interlock and align neatly and with tight fit.

7. Edges exposed to view and the weather neatly hemmed.

8. Lap joints tight and free of gapping.

9. Installation shall not trap or pond water.

10. Work securely fastened and free of loose fit or rattling.

11. Installation shall accommodate thermal expansion and contraction without causing distress to adjacent work or buckling / separation of sheet metal element.

B. Any part of the sheet metal work installed with improper or poor workmanship shall be removed and replaced at Contractor's expense.

3.11 FIELD QUALITY CONTROL AND INSPECTIONS

A. Contractor Quality Control: Employ / assign quality control personnel to monitor the work of this section for conformance to the requirements of the Contract Documents and to good construction practices.

1. Contractor is solely responsible for managing and controlling the quality of the work and conformance with the requirements of the Contract Documents.

END OF SECTION

SECTION 07 7233

ROOF HATCH

PART 1 GENERAL

1.01 RELATED DOCUMENTS

A. Drawings and general provisions of the Contract, including General Conditions, Supplementary Conditions and Divisions 00 and 01 Specification Sections, apply to work of this section.

1.02 SECTION INCLUDES

A. Roof Hatch.

B. Hatch Safety Guardrail.

C. Safety Post.

1.03 REFERENCES

A. References shall be the edition current as of the date of the Contract Documents.

1.04 SUBMITTALS

A. Refer to Section 01 3300 for submittal procedures.

B. Product Data: Provide manufacturer's product information sheet describing the ladder anchor, roof hatch materials, safety railing, accessories and design features.

1.05 PRODUCT HANDLING

A. Materials shall be delivered in manufacturer's original packaging.

B. Store materials in a dry, protected, well-vented area. The contractor shall thoroughly inspect product upon receipt and report damaged material immediately to delivering carrier and note such damage on the carrier's freight bill of lading.

1.06 WARRANTY

A. Manufacturer's Warranty: Manufacturer shall warrant that roof hatch shall be free of defects in material and workmanship for a period of five (5) years. Should a part fail to function in normal use within this period, manufacturer shall furnish a new part at no charge.

PART 2 PRODUCTS

2.01 ROOF HATCH

A. Manufacturer / Product: Products by BILCO are the basis of design and the standard of quality, function, performance and appearance required for this project. The following manufacturers are acceptable subject to their ability to provide products conforming to this standard:

1. BILCO (specified, basis of design).

2. Milcor.

3. Nystrom.

4. Precision Ladder.

5. Substitutions: Refer to Section 01 6000 for substitution procedures and requirements. Proposed substitutions must match specified product performance and colors.

B. Roof Hatch:

1. Manufacturer / Product: BILCO; *Type E-50T Enhanced Performance Roof Hatch.*

2. Size: 36-inches x 36-inches.

3. Configuration: Single leaf, hinged cover.

4. Construction: Heavy gauge welded aluminum construction; weathertight, with fully welded corner joints on cover and curb; pre-assembled.

5. Cover: 11 gauge aluminum with a 4 inch beaded flange with formed reinforcing members.

   a. Operation of cover shall not be affected by temperature.

   b. Reinforced to support a minimum live load of 40 psf with a maximum deflection of 1/150th of the span; and 20 psf wind uplift.

   c. Heavy extruded EPDM rubber gasket that is bonded to the cover interior to assure a continuous seal when compressed to the top surface of the curb.

   d. Cover Insulation: 2-inch thick polyisocyanurate rigid foam insulation with an R-value of 12, fully covered and protected by an 18 gauge aluminum liner.

6. Curb: Shall be 12-inches in height (when measured above finished roofing surface after installation) and fabricated from 11 gauge aluminum.

a. Formed with a 4-1/2-inch flange with 7/16-inch holes provided for securing to the roof deck.

b. Equipped with an integral metal cap flashing of the same gauge and material as the curb, fully welded at the corners, with stamped tabs at 6-inches on center to be bent inward to hold single ply roofing membrane securely in place.

c. Curb insulation: 2-inch thick polyisocyanurate rigid foam insulation with an R-value of 12.

7. Cover Lifting Mechanisms: Compression spring operators enclosed in telescopic tubes to provide, smooth, easy and controlled cover operation throughout the entire arc of opening and closing.

a. The upper tube shall be the outer tube to prevent accumulation of moisture, grit and debris inside the lower tube assembly.

b. The lower tube shall interlock with a flanged support shoe through bolted to the curb assembly.

8. Hardware

a. Heavy pintle hinges shall be provided.

b. Cover shall be equipped with a spring latch with interior and exterior turn handles.

c. Interior and exterior padlock hasps.

d. The latch strike shall be a stamped component bolted to the curb assembly.

e. Cover shall automatically lock in the open position with a rigid hold open arm equipped with a 1-inch diameter red vinyl grip handle to permit easy release for closing.

f. Compression spring tubes shall be an anti-corrosive composite material and all other hardware shall be zinc plated and chromate sealed. Springs shall have an electro-coated acrylic finish for corrosion resistance.

g. Cover hardware shall be bolted into heavy gauge channel reinforcing welded to the underside of the cover and concealed within the insulation space.

9. Finish: Mill finish aluminum.

2.02 HATCH SAFETY GUARDRAIL

A. Manufacturer / Product: Products by BILCO are the basis of design and the standard of quality, function, performance and appearance required for this project. The following manufacturers are acceptable subject to their ability to provide products conforming to this standard:

1. BILCO (specified, basis of design).

2. Milcor.

3. Nystrom.

4. Precision Ladder.

5. Substitutions: Refer to Section 01 6000 for substitution procedures and requirements. Proposed substitutions must match specified product performance and colors.

B. Hatch Safety Guardrail: Fixed roof hatch safety railing system with self-closing gate.

1. Manufacturer / Product: BILCO; *Bil-Guard 2.0 Hatch Railing System Model RL-E.*

2. Performance Requirements:

a. High visibility safety yellow color shall be molded in.

b. Hatch rail system shall attach to the cap flashing of the roof hatch and shall not penetrate any roofing material.

c. Hatch rail system shall satisfy the requirements of 29 CFR 1910.23 and shall meet OSHA strength requirements with a factor of safety of two.

d. UV and corrosion resistant construction with a five (5) year warranty.

e. Self-closing gate shall be provided with hatch rail system.

3. Posts and Rails: Shall be round pultruded reinforced fire-retardant yellow fiberglass treated with a UV inhibitor.

4. Hardware: Mounting brackets shall be 1/4-inch thick hot dip galvanized steel. Hinges and post guides shall be 6063T5 aluminum. Fasteners shall be Type 316 stainless steel.

2.03 SAFETY POST

A. Manufacturer / Product: Products by BILCO are the basis of design and the standard of quality, function, performance and appearance required for this project. The following manufacturers are acceptable subject to their ability to provide products conforming to this standard:

1. BILCO (specified, basis of design).

2. Milcor.

3. Nystrom.

4. Precision Ladder.

5. Substitutions: Refer to Section 01 6000 for substitution procedures and requirements. Proposed substitutions must match specified product performance and colors.

B. Safety Post: Telescoping, mounted to access ladder.

1. Manufacturer / Product: BILCO; *Model LU-1 LadderUp Safety Post.*

PART 3 EXECUTION

3.01 COORDINATION

A. Review, coordinate and accommodate work of other trades that interface with, affect or are affected by the work of this section so as to facilitate the execution of the overall Work of this project in a coordinated and efficient manner.

B. Coordinate installation of wood insulation stops for mounting roof hatch at opening in roof with Section 06 1000.

C. Coordinate installation with roofing system specified in Section 07 5323.

D. Coordinate installation with sheet metal flashing specified in Section 07 6200.

3.02 INSPECTION

A. Verify that roof deck is complete and ready for hatch installation.

B. Verify that insulation stop mounting curb is complete and ready for hatch installation.

C. Verify that opening in roof deck is proper size.

D. Verify that the substrate is dry, clean, and free of foreign matter.

E. Report and correct defects prior to any installation.

F. Start of installation indicates acceptance of roof deck and conditions.

3.03 INSTALLATION

A. Install wood insulation stop on 4 sides of opening in roof deck for roof hatch.

1. Install directly to wood roof deck under roof hatch matching thickness of roof insulation / coverboard so that top of curb is 12-inches above finish roof surface when installed; fasten to structural roof deck securely.

B. Install roof hatch securely to wood insulation stops in accordance with manufacturer's installation instructions.

C. Install hatch safety guardrail on hatch curb in accordance with manufacturer's installation instructions.

D. Install safety post on ladder in accordance with manufacturer's installation instructions.

E. Adjust cover for proper operation and latching.

3.04 FIELD QUALITY CONTROL

A. Contractor Quality Control: Employ / assign quality control personnel to monitor the work of this section for conformance to the requirements of the Contract Documents and to good construction practices.

1. Contractor is solely responsible for managing and controlling the quality of the work and conformance with the requirements of the Contract Documents.

END OF SECTION

SECTION 07 8400

FIRESTOPPING / SMOKE SEAL SYSTEMS

PART 1 GENERAL

1.01 RELATED DOCUMENTS

A. Drawings and general provisions of the Contract, including General Conditions, Supplementary Conditions and Divisions 00 and 01 Specification Sections, apply to work of this section.

1.02 WORK INCLUDES

A. Firestopping and Smoke Seal Systems.

1.03 SCOPE OF WORK

A. Provide Firestopping / Smoke Seal System(s) conforming to IBC, ASTM E814 and Building Official requirements at the following locations:

1. Around structural, mechanical, electrical and other penetrations through fire-rated assemblies.

2. At cracks, gaps and openings in fire-rated assemblies.

3. At perimeter of fire-rated assemblies where there are cracks, gaps, voids or openings.

1.04 REFERENCES

A. References shall be the edition current as of the date of the Contract Documents.

B. ASTM C665 - Standard Specification for Mineral-Fiber Blanket Thermal Insulation for Light Frame Construction and Manufactured Housing.

C. ASTM E814 - Standard Test Method for Fire Tests of Penetration Firestop Systems.

D. FM (AG) - FM Approval Guide.

E. IBC - International Building Code.

F. ICC - International Code Council.

G. ITS (DIR) - Directory of Listed Products.

H. UL (FRD) - Fire Resistance Directory.

1.05 SUBMITTALS

A. Refer to Section 01 3300 for submittal procedures.

B. Product Data: Submit manufacturer's product description and data sheet for each different required building assembly.

1. Include Material Safety Data Sheets (MSDS).

C. Shop Drawings / Product Data (If Required By Building Official): Prepare drawing of each firestopping / smoke seal condition showing installation requirements, fire-rated assembly type and fire-resistance rating, maximum size of gap, firestop system fire-resistance rating, testing laboratory fire rating data and documentation and any other information required by the Building Official.

1. Submit ICC Evaluation Service Report Number and a copy of the report to the Building Official having jurisdiction for review and approval.

2. Submit shop drawings and product data to Building Official having jurisdiction for review and approval.

3. Send Architect one (1) copy of drawings and product data approved by Building Official. Architect will not review or return submittal.

1.06 QUALITY ASSURANCE

A. Fire Testing: Provide firestopping / smoke seal system designs which provide the required fire ratings when tested in accordance with ASTM E814.

1. Listing in the current classification or certification books of UL (FRD), FM (AG), or ITS (DIR) (Warnock Hersey) will be considered as constituting an acceptable test report.

B. Installer Qualifications: Installer shall a minimum of five (5) years of experience installing firestop systems in buildings of similar construction to that found on this project.

C. Manufacturer Qualifications: Company specializing in manufacturing the products specified in this section with a minimum of three (3) years of experience.

1.07 ENVIRONMENTAL REQUIREMENTS

A. Comply with firestopping manufacturer's recommendations for temperature and conditions during and after installation.

PART 2 PRODUCTS

2.01 FIRESTOPPING / SMOKE SEAL SYSTEMS

A. Manufacturers / Products: Subject to their ability to conform to the requirements of the Drawings and this Specification, the following manufacturers / products may be provided:

1. 3M Company, Inc.; *Fire Protection Products* – ICC Report NER-243.

2. Tremco; *Through-Penetration Fire-Stop Systems* – ICC Report ER-3198.

3. U.S. Gypsum; *USG Firestop Penetration Systems* – ICC Report ER-5050.

4. GCP Applied Technologies; *FlameSafe Products* – ICC Report ESR-1043.

5. Substitutions: Refer to Section 01 60000 for substitution procedures and requirements. Proposed substitutions must match specified products performance. Approval of Building Official is also required.

B. Firestopping / Smoke Seal System(s): Provide complete Firestop / Smoke Seal System(s) that conform to the requirements of Chapter 7 of the International Building Code (IBC) and are designed, tested and fire-resistance rated to resist for a prescribed period of time the spread of fire through each different type of penetration, fire-rated assembly and construction type found in this Project.

1. Firestop / Smoke Seal System(s) shall be tested and listed by one of the testing agencies listed in “REFERENCES” section above and shall be acceptable to the Building Official having jurisdiction.

2. The F and T rating criteria for the Firestop / Smoke Seal System(s) shall be in accordance with ASTM E814 and IBC.

3. Firestopping / Smoke Seal Exposed to View: Firestop / Smoke Seal System must either be concealed from view behind the finish; or have an appearance matching the adjacent finish appearance and be paintable; or have a suitable finished trim or escutcheon to cover the firestopping.

4. Provide firestopping / smoke seal products from the same manufacturer on any single assembly or condition; do not mix different manufacturer’s products.

C. Rock (Mineral) Wool: Rock wool insulation spun from slab or basalt rock; 2.8 pound density, with formaldehyde-free binder, friction fit, unfaced, conform to ASTM C665.

1. Manufacturer / Product: Roxul, *AFB* is the basis of design and the standard of quality, function and performance required for this project.

a. Roxul; *AFB* (specified, basis of design).

b. Products by other manufacturers may be acceptable, subject to their ability to meet or exceed this standard and provide products conforming with the requirements of the Drawings and this Specification.

c. Substitutions: Refer to Section 01 6000 for substitution procedures and requirements. Proposed substitutions must match specified product performance.

PART 3 EXECUTION

3.01 COORDINATION

A. Review, coordinate and accommodate work of other trades that interface with, affect or are affected by the work of this section so as to facilitate the execution of the overall Work of this project in a coordinated and efficient manner.

B. Coordinate the timing of when to execute the work of this section with the work of other trades.

C. Coordinate firestopping / smoke seal at mechanical and electrical penetrations made by Divisions 21, 22, 23 and 26.

3.02 EXAMINATION

A. Verify that penetrations and openings are completed and ready to receive the work of this section.

3.03 PREPARATION

A. Clean substrate surfaces of dirt, dust, grease, oil, loose material, or other matter that may affect bond of firestopping material in accordance with manufacturer’s instructions.

B. Remove incompatible materials that may affect bond.

3.04 INSTALLATION

A. Select the specific firestopping / smoke seal assembly that will provide the specific fire rating required for the type of construction and conditions found and that conforms to the criteria stated in the testing agency listing.

B. Install materials in manner described in fire test report and in accordance with manufacturer's instructions, completely closing cracks / gaps and providing a firestop of each gap / crack in a fire-rated assembly equal to the fire rating of the assembly.

C. Where firestopping / smoke seal is exposed to view, finish to match adjacent surfaces.

D. Do not cover installed firestopping / smoke seal until inspected by authority having jurisdiction.

3.05 CLEANING AND PROTECTION

A. Clean adjacent surfaces of firestopping / smoke seal materials.

B. Protect adjacent surfaces from damage by material installation.

3.06 FIRESTOPPING LOCATIONS

A. Install firestopping / smoke seal in locations required by the IBC.

B. Install firestopping / smoke seal at cracks, gaps or openings within and around perimeter of fire-rated wall, floor or roof assemblies (refer to Drawings for location of rated assemblies).

C. Install firestopping / smoke seal around penetrations (structural, mechanical and electrical) through fire-rated assemblies; coordinate with structural mechanical and electrical work.

D. Install firestopping / smoke seal wherever noted on Drawings.

3.07 FIELD QUALITY CONTROL

A. Contractor Quality Control: Employ / assign quality control personnel to monitor the work of this section for conformance to the requirements of the Contract Documents and to good construction practices.

1. Contractor is solely responsible for managing and controlling the quality of the work and conformance with the requirements of the Contract Documents.

END OF SECTION

SECTION 07 9000

JOINT SEALERS

PART 1 GENERAL

1.01 RELATED DOCUMENTS

A. Drawings and general provisions of the Contract, including General Conditions, Supplementary Conditions and Divisions 00 and 01 Specification Sections, apply to work of this section.

1.02 SECTION INCLUDES

A. Interior Joint Sealants.

B. Floor Joint Sealant.

C. Exterior Joint Sealants.

D. Spray Foam.

E. Spray Seal.

1.03 REFERENCES

A. References shall be the edition current as of the date of the Contract Documents.

B. ASTM C834 - Standard Specification for Latex Sealants.

C. ASTM C920 - Standard Specification for Elastomeric Joint Sealants.

D. ASTM C1193 - Standard Guide for Use of Joint Sealants.

E. ASTM C1311 - Standard Specification for Solvent Release Sealants.

F. ASTM D1667 - Standard Specification for Flexible Cellular Materials—Poly (Vinyl Chloride) Foam (Closed-Cell).

G. ASTM E84 - Standard Test Method for Surface Burning Characteristics of Building Materials.

H. ICC - International Code Council.

I. UL 1715 - Standard for Safety Fire Test of Interior Finish Material.

1.04 SUBMITTALS

A. Refer to Section 01 3300 for submittal procedures.

B. Product Data: Provide data indicating sealant chemical characteristics, performance criteria, substrate preparation, limitations, and color availability.

C. Samples: Submit two (2) samples, 2-inch in size illustrating sealant colors for selection.

1.05 QUALITY ASSURANCE

A. Manufacturer Qualifications: Company specializing in manufacturing the Products specified in this section with a minimum of five (5) years of experience.

B. Applicator Qualifications: Company specializing in performing the work of this section with a minimum of five (5) years of experience.

1.06 ENVIRONMENTAL REQUIREMENTS

A. Maintain temperature and humidity recommended by the sealant manufacturer during and after installation.

1.07 COORDINATION

A. Coordinate the work with all sections referencing this section.

1.08 GUARANTEE

A. Contractor shall guarantee the sealant installation for a period of five (5) years against defects in installed materials and workmanship including a five (5) year watertight warranty. Correct any sealant that is found to be defective, improperly installed or leaks within a five (5) year period at no cost to the Owner.

PART 2 PRODUCTS

2.01 INTERIOR SEALANTS

A. General Purpose Interior Sealant: Siliconized acrylic emulsion latex; ASTM C834, single component, paintable.

1. Color: Match color of adjacent materials; or as selected by Architect.

2. Manufacturers / Products: Subject to their ability to conform to the requirements of the Drawings and this Specification, the following manufacturers / products may be provided:

a. Pecora; *AC-20+Silicone.*

b. Tremco; *Tremflex 834.*

c. Substitutions: Refer to Section 01 6000 for substitution procedures and requirements. Proposed substitutions must match specified products performance and colors.

3. Applications: Use for:

a. Interior wall and ceiling control joints.

b. Joints between interior door frames and wall surfaces.

c. Joints between interior side of window frames and wall surfaces.

d. Between GWB and other materials.

e. Joints between counter backsplash and sidesplash and wall.

f. Other interior joints for which no other type of sealant is indicated.

B. Plumbing Fixture Sealant: Neutral-curing silicone; ASTM C920, Class 50; single component, mildew resistant.

1. Color: Match color of plumbing fixture or adjacent materials as approved by Architect.

2. Manufacturer / Product: Pecora, *898 Sanitary Mildew Resistant Silicone Sealant* is the basis of design and the standard of quality, function, performance and appearance required for this project.

a. Pecora; *898 Sanitary Mildew Resistant Silicone Sealant* (specified, basis of design).

b. Products by other manufacturers may be acceptable, subject to their ability to meet or exceed this standard and provide products conforming with the requirements of the Drawings and this Specification.

c. Substitutions: Refer to Section 01 6000 for substitution procedures and requirements. Proposed substitutions must match specified product performance and colors.

3. Applications: Use for:

a. Joints between plumbing fixtures and counter, floor, and wall surfaces.

b. Interior joints in stone and ceramic tile or between tile and adjacent materials.

2.02 FLOOR JOINT SEALANT

A. Floor Joint Sealant: Pourable, self-leveling two-part, polysulfide-based joint sealant conforming to ASTM C920, Type M, Grade P, Class 25, NT not affected by pool water chemicals.

1. Manufacturer / Product: Products by WR Meadows are the basis of design and the standard of quality, function, performance and appearance required for this project.

a. WR Meadows (specified, basis of design).

b. Products by other manufacturers may be acceptable, subject to their ability to meet or exceed this standard and provide products conforming with the requirements of the Drawings and this Specification.

c. Substitutions: Refer to Section 01 6000 for substitution procedures and requirements. Proposed substitutions must match specified product performance and colors.

2. Sealant: *Deck-O-Seal.*

a. Color: Match floor color.

3. Primer (Required): *P/G Primer.*

4. Applications: Use for:

a. Concrete Floor Slab Construction and Control Joints in Natatorium and Exposed to View Polished Concrete Floors:

1) Use in conjunction with removable top expansion / construction joints and with sawcut control joints specified in Section 03 3001.

2.03 EXTERIOR SEALANTS

A. Exterior Joint Sealant: Silicone; ASTM C920, Type S, Grade NS, Class 50, Uses NT, M, G, A and O; single component.

1. Color: Color as selected to match adjacent material, selected from manufacturer's full range of available colors.

2. Manufacturer / Product: DowSil, *795 Silicone Building Sealant* is the basis of design and the standard of quality, function, performance and appearance required for this project.

a. DowSil; *795 Silicone Building Sealant* (specified, basis of design).

b. Products by other manufacturers may be acceptable, subject to their ability to meet or exceed this standard and provide products conforming with the requirements of the Drawings and this Specification.

c. Substitutions: Refer to Section 01 6000 for substitution procedures and requirements. Proposed substitutions must match specified product performance and colors.

3. Applications: Use for:

a. Masonry control joints (sand sealant to match mortar joint or color as approved by Architect).

b. Joints between window frames and adjacent construction (match frame color).

c. Joints between door and louver frames and adjacent construction (match frame color).

d. Other exterior joints for which no other sealant is indicated.

B. Exterior Joint Sealant: Silyl-terminated polyether; ASTM C920, Type S, Grade NS, Class 25, Uses NT, M, A and O.

1. Color: Color as selected to match adjacent material, selected from manufacturer's full range of available colors.

2. Manufacturer / Product: Master Builders, *MasterSeal NP 150* (single component) is the basis of design and the standard of quality, function, performance and appearance required for this project.

a. Master Builders; *MasterSeal NP 150* (single component) (specified, basis of design).

b. Products by other manufacturers may be acceptable, subject to their ability to meet or exceed this standard and provide products conforming with the requirements of the Drawings and this Specification.

c. Substitutions: Refer to Section 01 6000 for substitution procedures and requirements. Proposed substitutions must match specified product performance and colors.

3. Applications: Use for:

a. Sealant for sheet metal flashing installation / joints.

b. Exterior locations requiring painted finish over sealant.

C. Exterior Butyl Joint Sealant: Butyl rubber, nondrying, nonskinning, noncuring; ASTM C1311.

1. Manufacturers / Products: Subject to their ability to conform to the requirements of the Drawings and this Specification, the following manufacturers / products may be provided:

a. Pecora; *BC-158 Butyl Rubber Sealant.*

b. Tremco; *Butyl Sealant.*

c. Substitutions: Refer to Section 01 6000 for substitution procedures and requirements. Proposed substitutions must match specified products performance.

2. Applications: Use for:

a. Concealed sealant bead in lap joints for sheet metal work.

b. Concealed sealant bead in lap joints in prefinished wall and roof panels.

c. Sealant for sealing the sheet-applied air and water barrier material to concrete slab / foundation at locations shown on Drawings.

d. Sealant for bedding door thresholds.

e. Do not use in any location exposed to view or exposed to the sun.

2.04 SPRAY FOAM

A. Spray Foam: Single component polyurethane foam sealant which expands to take the shape of cracks and voids and permanently seals to substrate surfaces.

1. Code Approval: ICC Evaluation Service, Inc. ES Report ESR-1961.

2. Fire Performance:

a. Flame Spread Index Per ASTM E84: 25 or less.

b. Smoke Developed Index Per ASTM E84: 450 or less.

3. Thermal Barrier: None required when tested in accordance with UL 1715.

4. Manufacturer / Product: Dow Chemical Company, *Great Stuff* is the basis of design and the standard of quality, function and performance required for this project.

a. Dow Chemical Company; *Great Stuff* (specified, basis of design).

1) 6 different products and numerous different canister sizes available. Select the specific product and canister size to best fit the application and site conditions.

b. Products by other manufacturers may be acceptable, subject to their ability to meet or exceed this standard and provide products conforming with the requirements of the Drawings and this Specification.

c. Substitutions: Refer to Section 01 6000 for substitution procedures and requirements. Proposed substitutions must match specified product performance.

5. Installation: Use Dow foam dispensing guns for installing spray foam, do not install with the disposable plastic straw provided.

2.05 SPRAY SEAL

A. Spray Seal: A sprayable acrylic mastic air barrier for sealing gaps and joints where maximum movement is required in fire-rated and non-fire-rated construction.

1. Fire-Rated Assemblies / Construction:

a. Manufacturer / Product: Hilti, *CP672 Firestop Joint Spray* is the basis of design and the standard of quality, function and performance required for this project.

1) Hilti; *CP672 Firestop Joint Spray* (specified, basis of design).

2) Products by other manufacturers may be acceptable, subject to their ability to meet or exceed this standard and provide products conforming with the requirements of the Drawings and this Specification.

3) Substitutions: Refer to Section 01 6000 for substitution procedures and requirements. Proposed substitutions must match specified product performance.

2. Non-Fire-Rated Assemblies / Construction:

a. Manufacturer / Product: Hilti, *CP572 Smoke and Acoustic Spray* is the basis of design and the standard of quality, function and performance required for this project.

1) Hilti; *CP572 Smoke and Acoustic Spray* (specified, basis of design).

2) Products by other manufacturers may be acceptable, subject to their ability to meet or exceed this standard and provide products conforming with the requirements of the Drawings and this Specification.

3) Substitutions: Refer to Section 01 6000 for substitution procedures and requirements. Proposed substitutions must match specified product performance.

3. Accessories:

a. Mineral Wool Backing: 3 lb / cf mineral wool insulation.

2.06 ACCESSORIES

A. Primer: Non-staining type, recommended by sealant manufacturer to suit application.

B. Joint Cleaner: Non-corrosive and non-staining type, recommended by sealant manufacturer; compatible with joint forming materials.

C. Joint Backing: Round foam rod compatible with sealant of type recommended by sealant manufacturer for type of sealant; ASTM D1667, oversized as recommended by sealant manufacturer.

D. Bond Breaker: Pressure sensitive tape recommended by sealant manufacturer to suit application.

E. Sand (For Sanded Joints): Provide sand matching color of masonry mortar.

PART 3 EXECUTION

3.01 COORDINATION

A. Review, coordinate and accommodate work of other trades that interface with, affect or are affected by the work of this section so as to facilitate the execution of the overall Work of this project in a coordinated and efficient manner.

B. Coordinate work sequence and installation with work of other trades to provide a weathertight installation at exterior applications.

3.02 EXAMINATION

A. Inspect the substrate surfaces and joint openings and confirm they are ready to receive sealant work.

B. Confirm that joint size, configuration and conditions conform to sealant manufacturer's requirements so as to achieve manufacturer's published sealant performance.

C. Verify that joint backing and release tapes are recommended for use by sealant manufacturer with the specified sealant.

D. Do not start sealant installation until substrate surfaces and joint openings conform to sealant manufacturer’s requirements.

E. Sealant Adhesion Testing: Test adhesion of the sealant to each different substrate material in accordance with manufacturer’s requirements; install primer recommended by sealant manufacturer if any adhesion test fails.

F. Start of sealant installation indicates installer’s acceptance and confirmation that substrate, joint openings and conditions are in conformance with sealant manufacturer’s requirements.

3.03 PREPARATION

A. Thoroughly clean and prepare joint substrate surfaces in accordance with sealant manufacturer's instructions to achieve published sealant performance.

B. Remove loose materials and foreign matter which might impair adhesion of sealant.

C. Clean and prime joints in accordance with manufacturer's instructions.

D. Protect elements surrounding the work of this section from damage or disfigurement.

3.04 INSTALLATION – SEALANTS, GENERAL

A. Perform work in accordance with sealant manufacturer's requirements for preparation of surfaces and material installation instructions to achieve published sealant performance.

B. Perform installation in accordance with ASTM C1193.

C. Measure joint dimensions and size joint backers to achieve width-to-depth ratio, neck dimension, and surface bond area as recommended by manufacturer.

D. Install bond breaker where joint backing is not used.

E. Install sealant free of air pockets, foreign embedded matter, ridges, and sags.

F. Apply sealant within recommended application temperature ranges. Consult manufacturer when sealant cannot be applied within these temperature ranges.

G. Tool joints concave.

H. Broadcast sand into joints specified to be sanded.

3.05 INSTALLATION – SPRAY FOAM

A. Apply Spray Foam to fill gaps and voids in exterior envelope and at locations shown on the Drawings.

B. Clean and prepare substrate surfaces to receive spray foam as recommended by manufacturer to allow good adhesive bond between substrate and sealant.

1. Select the proper spray foam product and installation technique for each different application:

a. Spray foam application shall not cause any displacement or deflection of door frames, window frames, louvers, ducts, metal framing, GWB or other work by other trades.

C. Apply spray foam in strict conformance with manufacturer's installation instructions so that foam expands to completely fill cracks, voids and openings airtight and permanently seal to substrate materials.

1. Protect surfaces which are scheduled to receive sealant, coatings or other finish materials from being contaminated with spray foam.

D. After foam has cured, neatly cut off the excess foam and remove any foam overspray from exposed finish surfaces and adjacent materials without damaging the finish surfaces.

E. Protection and Cleaning:

1. Spray foam air barriers are not designed for permanent exposure to sunlight and shall be covered as soon as possible, do not leave exposed longer than recommended by manufacturer.

2. Completely remove any dirt or contaminates from spray foam before covering.

3.06 INSTALLATION – SPRAY SEAL

A. Apply spray seal air barrier system at locations shown on the Drawings and wherever a flexible air seal is required to bridge over or connect irregular shaped construction on the building interior.

B. Clean and prepare substrate surfaces to receive spray seal as recommended by manufacturer to allow good adhesive bond between substrate and spray seal.

C. Apply spray seal in strict conformance with manufacturer's installation instructions so that cracks, voids and openings are made airtight and permanently sealed to substrate materials.

1. Protect surfaces which are scheduled to receive sealant, coatings or other finish materials from being contaminated with spray seal.

D. Protection and Cleaning:

1. Spray seal air barriers are not designed for permanent exposure to exterior wet conditions, do not leave exposed to weather / water longer than recommended by manufacturer.

3.07 CLEANING

A. Clean adjacent soiled surfaces.

3.08 PROTECTION OF FINISHED WORK

A. Protect sealants until cured.

3.09 FIELD QUALITY CONTROL

A. Contractor Quality Control: Employ / assign quality control personnel to monitor the work of this section for conformance to the requirements of the Contract Documents and to good construction practices.

1. Contractor is solely responsible for managing and controlling the quality of the work and conformance with the requirements of the Contract Documents.

END OF SECTION

SECTION 08 1100

HOLLOW METAL DOORS AND FRAMES

PART 1 GENERAL

1.01 RELATED DOCUMENTS

A. Drawings and general provisions of the Contract, including General Conditions, Supplementary Conditions and Divisions 00 and 01 Specification Sections, apply to work of this section.

1.02 SECTION INCLUDES

A. Interior Hollow Metal Doors.

B. Interior Hollow Metal Frames.

C. Exterior Hollow Metal Doors.

D. Exterior Hollow Metal Frames.

1.03 PERFORMANCE REQUIREMENTS

A. Thermal Performance: The following requirements apply only to exterior hollow metal doors and frames:

1. Doors shall have a U-value of at least 0.37 when tested in accordance with ASTM C1363 and a U-value of at least 0.10 when tested in accordance with ASTM C518.

2. Doors and Frames shall comply with the performance requirements of the Washington State Energy Code (WSEC).

1.04 REFERENCES

A. References shall be the edition current as of the date of the Contract Documents.

B. ADA Standards - 2010 ADA Standards for Accessible Design.

C. ANSI/SDI A250.6 - Recommended Practice for Hardware Reinforcing on Standard Steel Doors and Frames.

D. ANSI/SDI A250.8 - Specifications for Standard Steel Doors and Frames (SDI-100).

E. ANSI/SDI A250.10 - Test Procedure and Acceptance Criteria for Prime Painted Steel Surfaces for Steel Doors and Frames.

F. ANSI/SDI A250.11 - Recommended Erection Instructions for Steel Frames.

G. ASTM A568/A568M - Standard Specification for Steel, Sheet, Carbon, Structural, and High-Strength, Low- Alloy, Hot-Rolled and Cold-Rolled, General Requirements for.

H. ASTM A653/A653M - Standard Specification for Steel Sheet, Zinc-Coated (Galvanized) or Zinc-Iron Alloy-Coated (Galvannealed) by the Hot-Dip Process.

I. ASTM A924/A924M - Standard Specification for General Requirements for Steel Sheet, Metallic-Coated by the Hot-Dip Process.

J. ASTM A1008/A1008M - Standard Specification for Steel, Sheet, Cold-Rolled, Carbon, Structural, High-Strength Low-Alloy, High-Strength Low-Alloy with Improved Formability, Required Hardness, Solution Hardened, and Bake Hardenable.

K. ASTM A1011/A1011M - Standard Specification for Steel, Sheet and Strip, Hot-Rolled, Carbon, Structural, High-Strength Low-Alloy, High-Strength Low-Alloy with Improved Formability, and Ultra-High Strength.

L. ASTM C518 - Standard Test Method for Steady-State Thermal Transmission Properties by Means of the Heat Flow Meter Apparatus.

M. ASTM C591 - Standard Specification for Unfaced Preformed Rigid Cellular Polyisocyanurate Thermal Insulation.

N. ASTM C1363 - Standard Test Method for Thermal Performance of Building Materials and Envelope Assemblies by Means of a Hot Box Apparatus.

O. ASTM D3359 - Standard Test Methods for Rating Adhesion by Tape Test.

P. ASTM E84 - Standard Test Method for Surface Burning Characteristics of Building Materials.

Q. ICC - International Code Council.

R. ICC A117.1 - Accessible and Usable Buildings and Facilities.

S. NFPA 80 - Standard for Fire Doors and Other Opening Protectives.

T. NFPA 101 - Life Safety Code.

U. NFPA 252 - Standard Methods of Fire Tests of Door Assemblies.

V. SDI 111 - Recommended Details for Standard Steel Doors, Frames, Accessories and Related Components.

W. SDI 111-A - Standard Steel Door Frame Details.

X. SDI 111-D - Door, Frame and Hardware Schedule for Standard Steel Doors and Frames.

Y. UL 1715 - Standard for Safety Fire Test of Interior Finish Material.

Z. WAC 51-50 - Washington Administrative Code, State of Washington Building Code.

AA. WSEC - Washington State Energy Code.

1.05 SUBMITTALS

A. Refer to Section 01 3300 for submittal procedures.

B. Product Data: Provide manufacturer's product literature and standard details.

1. Provide manufacturer’s technical data sheet on each different type of anchor and hardware reinforcement required.

C. Shop Drawings: Provide elevation and details of each different door and frame type, including frame anchors, glass stops, vision panels, and special conditions.

D. Door Schedule: Provide door, frame, and hardware schedule on format matching SDI 111-D in accordance with Door Schedule included on Drawings.

1.06 QUALITY ASSURANCE

A. Manufacturer Qualifications: Provide products from a single manufacturer who is a member of the Steel Door Institute.

B. Regulatory Requirements:

1. Fire rated door assemblies shall have been tested to meet conditions of NFPA 252 as required by NFPA 101 Section 6-2.3.3.

2. Code Compliance: Comply with WAC 51-50 amendments to the International Building Code.

3. Accessibility Compliance: Door hardware shall meet the requirements of ADA Standards and ICC A117.1.

4. ADA Accessibility Tolerances: Comply with ADA Standards tolerances shown on the Drawings.

1.07 DELIVERY, STORAGE AND HANDLING

A. Protect products from moisture, construction traffic, and damage.

B. Store vertically under cover. Do not use non-vented plastic or canvas shelters. Should wrappers become wet, remove immediately.

C. Place units on 4-inch high wood sills or in a manner that will prevent rust or damage. Provide 1/4-inch space between doors to promote air circulation.

PART 2 PRODUCTS

2.01 MANUFACTURERS

A. Manufacturers: Manufacturers shall be a member of Steel Door Institute with products conforming to the requirements of the Drawings and this specification.

2.02 MATERIALS

A. Steel Sheet for Doors and Frames:

1. Cold Rolled Steel: ASTM A1008/A1008M and ASTM A568/A568M.

2. Hot Rolled Steel: Pickled and oiled, ASTM A1011/A1011M and ASTM A568/A568M.

3. Galvanized Steel: ASTM A924/A924M and ASTM A653/A653M; hot-dipped zinc-coated steel.

B. Steel Sheet for Anchors and Accessories: ASTM A653/A653M, hot-dipped zinc-coated steel; with minimum G60 metallic coating.

C. Spray Foam Fill: Single component polyurethane foam sealant which expands to take the shape of cracks and voids and permanently seals to substrate surfaces.

1. Code Approval: ICC Evaluation Service, Inc. ES Report ESR-1961.

2. Fire Performance:

a. Flame Spread Index Per ASTM E84: 25 or less

b. Smoke Developed Index Per ASTM E84: 450 or less

3. Thermal Barrier: None required when tested in accordance with UL 1715.

4. Manufacturer / Product: Dow Chemical Company, *Great Stuff* is the basis of design and the standard of quality, function and performance required for this project.

a. Dow Chemical Company; *Great Stuff* (specified, basis of design).

1) There are six (6) different products and numerous different canister sizes available. Select the specific product and canister size to best fit the application and site conditions.

b. Products by other manufacturers may be acceptable, subject to their ability to meet or exceed this standard and provide products conforming with the requirements of the Drawings and this Specification.

c. Substitutions: Refer to Section 01 6000 for substitution procedures and requirements. Proposed substitutions must match specified product performance.

5. Installation: Use Dow foam dispensing guns for installing spray foam, do not install with the disposable plastic straw provided.

2.03 HOLLOW METAL (HM) DOOR FRAMES

A. Frames: ANSI/SDI A250.8 Level 3 – Extra Heavy Duty is the minimum performance standard; provide the following special requirements that exceed this minimum standard:

1. Regular Use Frames: 16-gauge steel sheet, fabricated to size, profile and configuration shown on Drawings.

a. Specialty Exterior Frames:

1) Fabricate frames with thermal break as shown on Drawings. Frames shall be similar to Curries *Mercury Thermal Break Frames*.

2) Continuous exterior flange as shown on the Drawings, but not less than 4-inches.

2. Fire-Rated Frames: Tested and listed by code approved testing agency for fire rating required for the wall that frame is mounted in.

a. Fire Label Requirement: Provide a fire label permanently affixed to the frame concealed behind door in closed position on the hinge side jamb; mount on head of frame if covered by continuous hinge on hinge side jamb. Fire rating information can be a separate label, or it can be stamped / embossed into the door frame.

3. Corner Construction: Face weld corners, grind welds flush and smooth.

4. Provide temporary removable spreader bars on bottom of each frame.

5. Reinforcement for Hardware: Conform to ANSI/SDI A250.6 and the following special requirements:

a. Hinge Reinforcement: Provide 7-gauge hinge reinforcement in doors, full width of frame (lesser gauge with equivalent threads is not acceptable). Weld reinforcement securely to frame.

b. Floor Anchors: Provide 14-gauge floor anchors on frames, full width of frame, securely welded to foot of each frame leg, with two (2) holes in each anchor for attachment to floor.

1) Concrete Anchor Bolts: Minimum 1/4-inch x 2-inch steel expansion anchor bolts.

c. Floor Anchors for Thermal Break Frames: Provide 16-gauge floor anchors on frames, two (2) anchors per frame with one (1) anchor on each side of the thermal break, securely welded to foot of each frame leg, with one (1) hole in each anchor for attachment to floor.

1) Concrete Anchor Bolts: Minimum 1/4-inch x 2-inch steel expansion anchor bolts.

d. Closer: Provide reinforcement sleeve full width of frame, formed to match frame profile.

6. Jamb Anchors: Provide jamb anchors per SDI 111-A.

a. Wood Framing: Sheet Metal Wood Stud Anchor with wrap around nail on straps.

7. Holes for Silencers: Drill stops to receive rubber silencers on frames not scheduled for weatherstripping or smoke gasket.

8. Exterior Frames: Galvanized steel.

2.04 HOLLOW METAL (HM) DOORS

A. Doors: ANSI/SDI A250.8 Level 2 – Heavy Duty, Model 2 – Seamless is the minimum performance standard; provide the following special requirements that exceed this minimum standard:

1. Regular Use Doors: 18-gauge sheet steel, fabricated to size and configuration shown on Drawings.

2. Fire-Rated Doors: Tested and listed by code approved testing agency for fire rating required for the wall door is mounted in.

a. Fire Label Requirement: Provide a fire label permanently affixed to the edge of the door in concealed location on the hinge side; install on top edge of door if continuous hinge will cover it on hinge edge. Fire rating information can be a separate label, or it can be stamped / embossed into the door.

3. Hardware Reinforcement: Conform to ANSI/SDI A250.6.

4. Door Construction:

a. Face: Full flush, no seams.

b. Edge Seam: Seamless, continuous welded and ground smooth.

c. Edge Bevel: Bevel strike side.

d. Hinge Cutouts: Provide handed hinge cutouts for door swing (non-handed doors with hinge fillers are not allowed).

e. Edge Reinforcement Channels: Provide doors with full height 14-gauge steel lock channels (rails) and 12-gauge steel hinge channels (rails) concealed in construction of door and securely welded to both faces.

5. Door Core:

a. Interior Doors: Honeycomb cores.

b. Exterior Doors: Insulated core meeting the requirement listed in "Performance Requirements" in Part 1.

c. Fire-Rated Doors: Cores in accordance with listed construction.

6. Exterior Door Tops: Invert reinforcement channel to prevent place for water to collect and seal the top of door watertight.

7. Door Undercuts: Provide undercuts to accommodate door hardware provided by Section 08 7100 and as required by applicable codes.

8. Exterior Doors: Galvanized steel.

2.05 FABRICATION

A. Confirm field conditions and coordinate depth of each frame throat to match thickness of wall or other configuration shown on Drawings.

B. Fabricate steel doors and frames to sizes and profiles shown on the Drawings in conformance to the requirements of this section, ANSI/SDI A250.6, ANSI/SDI A250.8, and fire listing requirements.

C. Prepare and reinforce steel doors and frames to receive door hardware specified in Section 08 7100.

D. Finish:

1. Factory Prime Paint Finish: Prime paint surfaces of doors and frames under controlled conditions at the factory.

a. Doors and Frames shall be thoroughly cleaned, and chemically treated to insure maximum paint adhesion.

b. Surfaces of the doors and frames exposed to view shall receive a factory applied coat of rust inhibiting primer, either air-dried or baked-on.

c. The finish shall meet the requirements for acceptance stated in ANSI/SDI A250.10.

2. Shop Prime Paint Touch-Up: Repair any factory applied prime paint damaged by shipping or by shop modifications to doors and frames.

a. Surface preparation, prime paint and application shall conform to factory finishing standards and be compatible with field painting specified in Section 09 9000.

b. The finish shall meet the requirements for acceptance stated in ANSI/SDI A250.10.

3. Performance Requirement: Primer bond to steel substrate shall pass adhesion field testing per ASTM D3359, Type A Cross Hatch.

2.06 DOOR AND FRAME CLEARANCES

A. Door and Frame clearances shall conform to ANSI/SDI A250.8 , 2.06 and fire listing requirements on fire-rated doors.

PART 3 EXECUTION

3.01 COORDINATION

A. Review, coordinate and accommodate work of other trades that interface with, affect or are affected by the work of this section so as to facilitate the execution of the overall Work of this project in a coordinated and efficient manner.

B. Coordinate the size and layout of reinforcement and preparation for door hardware with Section 08 7100.

3.02 EXAMINATION

A. Verify that substrate and project conditions are suitable before beginning installation of frames.

B. Correct unsatisfactory condition before proceeding with installation.

C. Start of installation indicates acceptance of substrate and conditions.

3.03 PREPARATION

A. Spray Foamed Frames:

1. Confirm that guards at hardware locations will not leak spray foam; install tape over any guards with openings.

2. Plug any holes in the steel framing where spray foam could leak through.

3.04 SPRAY FOAMING FRAMES

A. Before frames have been installed, spray foam the frame cavities solid with spray foam. Remove excess foam before installation.

B. After frames are installed, fill cavity between frame and wall opening with spray foam. Remove excess foam.

3.05 INSTALLATION

A. Install frames plumb, level, rigid, and in true alignment as recommended in ANSI/SDI A250.11, NFPA 80, and in accordance with fire labeling requirement on fire-rated openings.

B. Secure floor anchors to floor with steel anchors / screw of size, length and type appropriate for permanently secure attachment to substrate material, two (2) anchors per jamb anchor.

C. Screw jamb anchors securely to wall framing / structure using method recommended by manufacturer for permanently secure installation.

D. Install doors plumb and in true alignment and fasten to achieve the maximum operational effectiveness and appearance of the unit. Maintain clearances specified in ANSI/SDI A250.8 .

E. ADA Accessibility Clearances and Tolerances: Comply with ADA Standards clearances and tolerances shown on the Drawings.

3.06 ADJUST AND CLEAN

A. Adjust doors for proper operation, free from binding or other defects.

B. Clean and restore soiled surfaces. Remove scraps and debris, and leave site in a clean condition.

3.07 FIELD QUALITY CONTROL

A. Contractor Quality Control: Employ / assign quality control personnel to monitor the work of this section for conformance to the requirements of the Contract Documents and to good construction practices

1. Contractor is solely responsible for managing and controlling the quality of the work and conformance with the requirements of the Contract Documents.

3.08 SCHEDULE – REFER TO DRAWINGS

END OF SECTION

SECTION 08 1400

WOOD DOORS

PART 1 GENERAL

1.01 RELATED DOCUMENTS

A. Drawings and general provisions of the Contract, including General Conditions, Supplementary Conditions and Divisions 00 and 01 Specification Sections, apply to work of this section.

1.02 SECTION INCLUDES

A. Flush 1-3/4-inch Thick Hardwood Veneer Solid Core Rated Wood Doors.

B. Flush 1-3/4-inch Thick Hardwood Veneer Solid Core Non-Rated Wood Doors.

1.03 REFERENCES

A. References shall be the edition current as of the date of the Contract Documents.

B. NFPA 80 - Standard for Fire Doors and Other Opening Protectives.

C. NFPA 252 - Standard Methods of Fire Tests of Door Assemblies.

D. SDI 111-D - Door, Frame and Hardware Schedule for Standard Steel Doors and Frames.

E. UL 10C - Standard for Positive Pressure Fire Tests of Door Assemblies.

F. WDMA I.S. 1A - Interior Architectural Wood Flush Doors.

1.04 SUBMITTALS

A. Refer to Section 01 3300 for submittal procedures.

B. Product Data: Submit manufacturer's product literature, indicate door core materials and construction; veneer species, plastic laminate, type and characteristics.

C. Shop Drawings: Illustrate door opening criteria, elevations, sizes, types, swings, undercuts required, special beveling, factory machining criteria, finishing system criteria, identify cutouts for glazing and / or louvers.

D. Door Schedule: Provide door, frame, and hardware schedule on format matching SDI 111-D in accordance with Door Schedule included on Drawings.

E. Samples – Hardwood Veneer: Submit two (2) samples of each different type of hardwood veneer specified, 8-inch x 11-inch x 1/4-inch in size illustrating species, wood grain and finish system finished to match Architect's color control sample.

1.05 QUALITY ASSURANCE

A. Perform work in accordance with WDMA I.S. 1A.

B. Manufacturer: Company specializing in manufacturing the products specified in this section with a minimum of ten (10) years of experience.

1.06 DELIVERY, STORAGE AND PROTECTION

A. Accept doors on site in manufacturer's packaging. Inspect for damage.

B. Protect doors with individual resilient packaging.

C. Do not store in damp or wet areas; or in areas where sunlight might bleach veneer. Seal top and bottom edges with tinted sealer. Break seal on site to permit ventilation.

1.07 PROJECT CONDITIONS

A. Coordinate the work with door opening construction, door frame and door hardware installation.

1.08 WARRANTY

A. Provide manufacturer's warranty for the following term:

1. Interior Doors: Life of installation.

B. Include coverage for delamination of veneer or laminate, warping beyond specified installation tolerances, defective materials, and telegraphing core construction.

PART 2 PRODUCTS

2.01 MANUFACTURERS

A. Manufacturers / Products: Subject to their ability to conform to the requirements of the Drawings and this Specification, the following manufacturers may provide products:

1. Lynden Door.

2. Masonite Architectural.

3. Oregon Door.

4. Vancouver Door.

5. VT Industries.

6. Substitutions: Refer to Section 01 6000 for substitution procedures and requirements.

2.02 FLUSH HARDWOOD VENEER SOLID CORE WOOD DOORS

A. Rated and Non-Rated Flush Wood Doors: Bonded Core 5 or 7 ply doors conforming to WDMA I.S. 1A and the following:

1. Grade: WDMA I.S. 1A Premium Grade.

2. Duty Level: WDMA I.S. 1A Extra Heavy Duty.

3. Thickness: 1-3/4-inches.

4. Stiles and rails bonded to core.

5. Cores:

a. Non-Fire-Rated Door Cores: Structural composite lumber core (engineered wood); particleboard cores are not allowed.

b. Fire-Rated Door Construction: Hourly ratings as indicated on Drawings; construction matching fire test listing; doors complying with NFPA 80 that are listed and labeled by a qualified testing agency, for fire-protection ratings indicated, based on testing at positive pressure according to NFPA 252 or UL 10C.

1) Affix permanent metal labels attesting to fire-resistance.

2) At exit enclosures, provide units listed for 450-degree F maximum temperature rise rating for 30 minutes of exposure.

3) Doors shall be tested and labeled to meet requirements of NFPA 80, fire label shall include the "S" endorsement; provide concealed seal integral in door edge.

6. Stiles and Rails: 1-inch minimum thickness solid hardwood, finger-jointing not allowed; vertical edge species solid hardwood matching hardwood veneer face, stiles and rails bonded to core.

7. Hardwood Veneer: Hardwood veneer suitable for transparent finish:

a. Hardwood Veneer Species: White Oak Decorative Hardwoods Association Grade AA.

b. Veneer Cut: Plain Sliced.

c. Leaf Matching: Slip match veneer leafs, balance matched on width of door.

d. Double Door Matching: Pair matched.

e. Color: _____.

2.03 FABRICATION – HARDWOOD VENEER SOLID CORE WOOD DOORS

A. Fabricate doors in accordance with WDMA I.S. 1A requirements.

B. Fabricate fire-rated doors in accordance with fire testing agency requirements. Attach metal fire rating label to door.

C. Vertical Exposed Edge – Solid Edge: White Oak Hardwood matching the hardwood veneer.

D. Bond edge banding to cores.

E. Bevel strike edge of door.

F. Coordinate size of door and edge clearances with frames specified in Section 08 1100 and with door hardware specified in Section 08 7100 so that field planing door edges for proper fit is not required.

G. Factory machine doors for finish hardware specified in Section 08 7100 in accordance with hardware requirements and dimensions. Do not machine for surface hardware.

H. Door Undercuts: Provide undercuts to accommodate door hardware provided by Section 08 7100 and as required by applicable codes.

I. Factory fit doors for frame opening dimensions.

J. Provide edge clearances in accordance with WDMA I.S. 1A.

2.04 FACTORY AND SHOP FINISHES

A. Transparent Finish for Door Edge and Hardwood Veneer Face: Factory finish doors in accordance with WDMA I.S. 1A Premium Grade:

1. Finish System: TR-6 Catalyzed Polyurethane, including reduced vinyl sealer wash coat (if required), wash coat, stain, vinyl sealer, sanding with 220 grit, first topcoat and second topcoat; satin finish. UV Curable Polyester or Urethane finish systems are also acceptable.

PART 3 EXECUTION

3.01 COORDINATION

A. Review, coordinate and accommodate work of other trades that interface with, affect or are affected by the work of this section so as to facilitate the execution of the overall Work of this project in a coordinated and efficient manner.

B. Coordinate installation of doors with installation of hollow metal frames specified in Section 08 1100 and hardware specified in Section 08 7100.

3.02 EXAMINATION

A. Inspect frames and existing conditions before starting work.

B. Verify that frames, opening sizes and tolerances are acceptable.

C. Do not install doors in frame openings that are not plumb or are out-of-tolerance for size or alignment.

D. Beginning of installation indicates acceptance of frame installation and conditions.

3.03 INSTALLATION – DOORS

A. Install doors in accordance with manufacturer's instructions and WDMA I.S. 1A installation requirements.

1. Install fire-rated doors in accordance with NFPA 80 requirements and fire listing.

B. Gap between bottom of door and floor on non-rated doors shall not exceed 5/8-inch.

C. Gap between bottom of door and floor on fire-rated doors shall not exceed code and fire listing requirements.

D. Coordinate installation of doors with installation of hollow metal frames specified in Section 08 1100 and hardware specified in Section 08 7100.

3.04 ADJUSTING

A. Adjust doors for smooth and balanced door movement.

B. If the door has a closer, adjust closer for full closure.

3.05 FIELD QUALITY CONTROL

A. Contractor Quality Control: Employ / assign quality control personnel to monitor the work of this section for conformance to the requirements of the Contract Documents and to good construction practices.

1. Contractor is solely responsible for managing and controlling the quality of the work and conformance with the requirements of the Contract Documents.

3.06 SCHEDULE – REFER TO DRAWINGS

END OF SECTION

SECTION 08 3100

ACCESS DOORS

PART 1 GENERAL

1.01 RELATED DOCUMENTS

A. Drawings and general provisions of the Contract, including General Conditions, Supplementary Conditions and Divisions 00 and 01 Specification Sections, apply to work of this section.

1.02 SECTION INCLUDES

A. Access Doors.

1. Non-Rated.

2. Fire-Rated.

1.03 SCOPE OF WORK

A. Provide access doors in walls and ceilings wherever items requiring maintenance or code mandated access are installed concealed in the construction, such as for electrical junction boxes, plumbing shut-off valves, fire sprinkler drain valves, equipment, concealed mechanisms, door adjustment, and similar conditions.

1. Exact locations and sizes of access doors are not indicated on the Drawings. Obtain specific locations and sizes for access doors from trades requiring access to concealed equipment.

2. Access doors shall be sized to allow easy maintenance access by average size person, and shall be large enough to allow maintenance and replacement functions to occur.

3. Where access doors must be used in fire-rated assemblies, provide fire - rated access doors matching fire rating of assembly in which it is installed.

1.04 REFERENCES

A. References shall be the edition current as of the date of the Contract Documents.

B. UL (DIR) - Online Certifications Directory.

C. UL (FRD) - Fire Resistance Directory.

D. UL 10B - Standard for Fire Tests of Door Assemblies.

1.05 SUBMITTALS

A. Refer to Section 01 3300 for submittal procedures.

B. Product Data: Provide general product data, construction, component connections and details.

1.06 QUALITY ASSURANCE

A. Fire-Resistance:

1. Provide access door units which have been tested in accordance with UL 10B, and are listed in Underwriters Laboratory, Inc. "Building Materials Directory (UL (DIR))" for fire rating indicated.

   a. Attach UL (FRD) label to each fire-rated access door.

2. For fire-rated ceiling access doors, provide door assembly from manufacturer whose products have been tested by independent testing agency and have been found acceptable for fire ratings indicated.

   a. Provide testing agency label on each fire-rated access door.

1.07 DELIVERY, STORAGE AND HANDLING

A. Coordinate delivery of access doors with other work to avoid delays.

PART 2 PRODUCTS

2.01 MANUFACTURERS

A. Manufacturers / Products: Subject to their ability to conform to the requirements of the Drawings and this Specification, the following manufacturers may provide products:

1. J. L. Industries.

2. Karp Associates.

3. Larsens Manufacturing Company.

4. Milcor / Lima Register.

5. Nystrom.

6. Williams Brother Corp.

7. Substitutions: Refer to Section 01 6000 for substitution procedures and requirements.

2.02 MANUFACTURED UNITS

A. Access Door Assembly at Non-Rated Locations:

1. Location: Wall or Ceiling.

2. Type: Flush door panel with concealed drywall frame.

3. Fire Rating: Non-rated.

4. Frame: 16 gauge steel.

   a. Provide Type 304 stainless steel at Toilet Rooms (except ceiling) and wet areas.

5. Door: 14 gauge steel flush panel.

   a. Provide Type 304 stainless steel at Toilet Rooms (except ceiling) and wet areas.

6. Hinge: Continuous type hinge with stainless steel pin.

7. Finish: Baked-on rust-inhibitive prime coat. Ready for paint by Section 09 9000.

   a. Stainless Steel: No. 4 Brushed Satin Finish.

8. Size: As required for access, or as shown.

B. Access Door Assembly at Fire-Rated Assemblies:

1. Location: Wall or Ceiling.

2. Type: Flush door panel with concealed drywall frame.

3. Substrate: Frame wall / shaft wall.

4. Fire Rating: Match fire rating of assembly that access door is mounted in.

5. Frame: 16 gauge steel.

   a. Provide Type 304 stainless steel at Toilet Rooms (Except Ceiling) and wet areas.

6. Door: 20 gauge steel flush panel, welded hollow metal construction.

   a. Provide Type 304 stainless steel at Toilet Rooms (except ceiling) and wet areas.

7. Hinge: Continuous type hinge with stainless steel pin.

8. Finish: Baked-on rust-inhibitive prime coat. Ready for paint by Section 09 9000.

   a. Stainless Steel: No. 4 Brushed Satin Finish.

9. Size: As required for access, or as shown.

2.03 ACCESSORIES

A. Locking Devices: Provide lock assembly that will accommodate keyed cylinder provided by Section 08 7100.

2.04 FABRICATION

A. Access Doors and Frames:

1. General: Fabricate access door components of continuous welded construction, with welds ground smooth.

   a. Fabricate units of continuous welded steel construction.

2. Frames:

   a. Concealed frames in gypsum board construction: Fabricate frame with perforated flanges and gypsum board finishing trim.

3. Doors: Flush panel doors.

   a. Fabricate door panel from material and gauge indicated, with a smooth face, and with door edges installed square with door frame.

   b. Fabricate fire-rated units with insulated flush doors, continuous piano hinge, and self-closing mechanism with interior side safety latch release in manufacturer's standard tested design for fire rating indicated.

B. Shop / Factory Finishing: Prime paint finish: Where indicated, finish door assembly with manufacturer's standard factory applied rust-inhibitive primer suitable for field painting by Section 09 9000.

1. Stainless Steel Units: No. 4 Brushed Satin Finish.

PART 3 EXECUTION

3.01 COORDINATION

A. Review, coordinate and accommodate work of other trades that interface with, affect or are affected by the work of this section so as to facilitate the execution of the overall Work of this project in a coordinated and efficient manner.

B. Coordinate installation to occur prior to finish taping of GWB by Section 09 2900.

3.02 INSTALLATION

A. Install access doors in accordance with door manufacturer's installation instructions and fire rating requirements.

B. Fasten access door assemblies securely in place with exposed surfaces located level and flush with substrate.

3.03 ADJUSTING

A. Upon completion of installation, adjust door panels, hinges, and hardware to operate smoothly.

B. Remove and replace damaged or warped doors or frames.

3.04 FIELD QUALITY CONTROL

A. Contractor Quality Control: Employ / assign quality control personnel to monitor the work of this section for conformance to the requirements of the Contract Documents and to good construction practices.

1. Contractor is solely responsible for managing and controlling the quality of the work and conformance with the requirements of the Contract Documents.

END OF SECTION

SECTION 08 3613

ELECTRICALLY OPERATED OVERHEAD SECTIONAL DOORS

PART 1 GENERAL

1.01 RELATED DOCUMENTS

A. Drawings and general provisions of the Contract, including General Conditions, Supplementary Conditions and Divisions 00 and 01 Specification Sections, apply to work of this section.

1.02 SECTION INCLUDES

A. Electrically Operated Aluminum Overhead Sectional Doors.

1.03 PERFORMANCE REQUIREMENTS

A. Design and size components to withstand dead loads and the positive and negative wind pressures in accordance with DASMA 102 and as calculated in accordance with Section 1609 of the IBC, 110 mph design wind speed, and as measured in accordance with ASTM E330/E330M using test loads equal to 1.5 times the design wind loads and 10 second duration of maximum load.

1.04 REFERENCES

A. References shall be the edition current as of the date of the Contract Documents.

1.05 SUBMITTALS

A. Refer to Section 01 3300 for submittal procedures.

B. Shop Drawings: Indicate opening dimensions and required tolerances, connection details, anchorage spacing, hardware locations, installation details and wiring diagram and connection to electrical.

C. Product Data: Provide component construction, anchorage method, hardware, etc.

D. Color Samples: Submit two (2) color samples of specified finish.

E. Maintenance Data: Include data for motor and transmission, shaft and gearing, lubrication frequency, spare part sources.

1.06 QUALITY ASSURANCE

A. Manufacturer: Sectional doors shall be manufactured by a firm with a minimum of five (5) years of experience in the fabrication and installation of sectional doors.

B. Installer: Company specializing in performing the work of this section with a minimum of five (5) years of experience and shall be an authorized representative of the manufacturer.

C. Quality Standard: Conform to the requirements of DASMA 102, conform to the requirements of this specification where they exceed DASMA 102.

D. Single-Source Responsibility: Provide doors, tracks, motors and accessories from one manufacturer for each type of door. Provide secondary components from source acceptable to manufacturer of primary components.

PART 2 PRODUCTS

2.01 MANUFACTURERS / PRODUCTS

A. Manufacturers / Products: Products by Northwest Door are the basis of design and the standard of quality, function, performance and appearance required for this project. The following manufacturers are acceptable subject to their ability to provide products conforming to this standard:

1. Clopay.

2. Northwest Door (specified, basis of design).

3. Overhead Door Corporation.

4. Raynor.

5. Windsor Door.

6. Substitutions: Refer to Section 01 6000 for substitution procedures and requirements. Proposed substitutions must match specified product performance and colors.

2.02 ALUMINUM OVERHEAD SECTIONAL DOORS

A. Aluminum Overhead Sectional Doors:

1. Product: *Model 800.*

2. Materials:

a. Sheet Aluminum: 0.05-inch thick, smooth.

b. Aluminum Stiles and Rails: Commercial grade, 6063-T6 extruded aluminum alloy, box-type construction.

3. Panel Construction:

a. Panels: Provide aluminum panels. Seal with rigid vinyl molding.

1) Perforated Aluminum – Expanded.

b. Door Nominal Thickness: 2-inches thick.

4. Door Components:

a. Track: Rolled galvanized steel, 12 gauge thick; 3-inch wide, continuous one piece per side; galvanized steel mounting brackets 14 gauge thick.

b. Hinge and Roller Assemblies: Heavy duty hinges and adjustable roller holders of stainless steel; floating hardened steel bearing rollers, located at top and bottom of each panel, each side.

c. Lift Mechanism: Torsion spring on cross head shaft, with braided galvanized steel lifting cables. Manual operation with maximum exertion of 110 N (25 lbs) force.

1) Springs: 50,000 cycles.

d. Sill Weatherstripping: Resilient vinyl strip, one piece; fitted to bottom of door panel, full length contact.

e. Jamb and Head Weatherstripping: Fitted with resilient weatherstripping, placed in moderate contact with door panels, type of weatherstripping as recommended by door manufacturer for particular application and mounting type / surfaces.

f. Panel Joint Weatherstripping: Flexible compressible seal, one-piece full length.

5. Electrical Characteristics and Components:

a. Electrical Characteristics:

1) 375 W (1/2 hp); manually operable in case of power failure, transit speed of 12-inches, per second.

2) 208 volts, three phase, 60 Hz.

3) Refer to Electrical Drawings for Electrical connections.

b. Motor: NEMA MG 1, Type 4.

c. Wiring Terminations: Provide terminal lugs to match branch circuit conductor quantities, sizes, and materials indicated. Enclose terminal lugs in terminal box sized to NFPA 70.

d. Disconnect Switch: Factory mount disconnect switch in control panel.

e. Electric Operator:

1) Center mounted draw bar assembly, adjustable safety friction clutch.

2) Brake system actuated by independent voltage solenoid controlled by motor starter; enclosed gear driven limit switch; enclosed magnetic cross line reversing starter; mounting brackets and hardware.

f. Control Station:

1) Standard three (3) button (open-close-stop) momentary type, control for each electric operator; 24 volt circuit, surface mounted.

2) Include key operated switch located at inside door jamb. Cylinder specified in Section 08 7100.

g. Safety Edge: At bottom of door panel, full width; electro-mechanical sensitized type, wired to reverse door upon striking object; hollow rubber covered to provide weatherstrip seal.

6. Finishes: Factory finish the frame, track and related hardware and components as follows:

a. Custom color, factory coated with 70% Kynar 500 or Hylar 5000 Fluoropolymer PVDF2 paint coating in accordance with AAMA 2605.

b. Exterior Surfaces Color(s): _____.

c. Interior Surfaces Color(s): _____.

PART 3 EXECUTION

3.01 COORDINATION

A. Review, coordinate and accommodate work of other trades that interface with, affect or are affected by the work of this section so as to facilitate the execution of the overall Work of this project in a coordinated and efficient manner.

B. Coordinate location of backing in wall required for counterbalance mechanism.

C. Coordinate electrical rough-in requirements with Division 26 installer.

D. Coordinate cylinders for control station operation with cylinders specified in Section 08 7100.

3.02 EXAMINATION

A. Verify that wall openings are ready to receive work and opening dimensions and tolerances are within specified limits.

B. Inspect structure and framing members and confirm they are adequate to support the door assembly.

C. Start of installation indicates acceptance of opening sizes, tolerances, support structure and conditions.

3.03 INSTALLATION

A. Install door unit assembly in accordance with manufacturer's installation instructions.

B. Anchor door assembly securely to building structural framing without distortion or stress.

C. Securely brace door tracks suspended from structure. Secure tracks and braces to structural members only.

D. Fit and align assembly including hardware; level and plumb, to provide smooth operation.

E. Install conduit and boxes for control wiring; pull control wire and make connections on low voltage control wiring.

F. Coordinate wiring and connection of motor operators and wall switches by Division 26 installer.

3.04 INSTALLATION TOLERANCES

A. Maximum Variation from Plumb: 1/16-inch.

B. Maximum Variation from Level: 1/16-inch.

C. Maintain dimensional tolerances and alignment with adjacent work.

3.05 ADJUSTING

A. Adjust hardware and operating assemblies for smooth and noiseless operation.

B. Adjust door assembly for full contact with weatherstripping.

3.06 CLEANING AND PROTECTION

A. Clean installed components.

B. Remove temporary labels and visible markings.

C. Protect door from damage by construction traffic through overhead door openings after adjustment and cleaning.

3.07 FIELD QUALITY CONTROL

A. Contractor Quality Control: Employ / assign quality control personnel to monitor the work of this section for conformance to the requirements of the Contract Documents and to good construction practices.

1. Contractor is solely responsible for managing and controlling the quality of the work and conformance with the requirements of the Contract Documents.

3.08 SCHEDULE – REFER TO DRAWINGS

END OF SECTION

SECTION 08 4113

ALUMINUM STOREFRONT AND ENTRANCES

PART 1 GENERAL

1.01 RELATED DOCUMENTS

A. Drawings and general provisions of the Contract, including General Conditions, Supplementary Conditions and Divisions 00 and 01 Specification Sections, apply to work of this section.

1.02 SECTION INCLUDES

A. Aluminum Framed Storefront Systems.

B. Aluminum Framed Entrances and Doors.

C. Glazing Installation.

D. Interior and Exterior Sealants.

1.03 PERFORMANCE REQUIREMENTS

A. Installed Storefront System Performance Requirements:

1. Air Infiltration: Not exceeding 0.06 CFM per square foot of fixed area when tested at differential static pressure of 6.24 P.S.F. in accordance with ASTM E283/E283M.

2. Water Infiltration: No water penetration at 10 P.S.F. when tested in accordance with ASTM E331.

3. Structural Performance: When subjected to the maximum design wind load pressures as defined for this project location by the IBC and State / local building codes and confirmed by tests in accordance with ASTM E330/E330M, storefront system shall:

   a. Limit deflection of framing members to not more than 1/200 or full recovery flexure limit of glazing if less.

   b. Provide a 50% safety factor on fasteners attaching system to building structure.

4. Thermal Performance: Framing systems shall accommodate expansion and contraction movement due to surface temperature differentials of 180 degrees Fahrenheit without causing buckling, stress on glass, failure of joint seals, excessive stress on structural elements, reduction of performance, or other detrimental effects. Doors shall function normally within these temperature differentials.

5. Energy Performance Certification: Overall assembly (frame and glazing) shall be NFRC (CPD) Certified.

   a. Thermal Transmittance Performance (Frame and Glazing):

      1) U-Value: Overall U-value not exceeding 0.38 for fixed glazing and 0.46 for operable doors when tested according to AAMA 1503; coordinate with Section 08 8000.

      2) Solar Heat Gain Coefficient: Overall solar heat gain of at least 0.40 for fixed glazing and 0.22 for operable doors; coordinate with Section 08 8000.

1.04 REFERENCES

A. References shall be the edition current as of the date of the Contract Documents.

B. AAMA 1503 - Voluntary Test Method for Thermal Transmittance and Condensation Resistance of Windows, Doors and Glazed Wall Sections.

C. ADA Standards - 2010 ADA Standards for Accessible Design.

D. ASTM B221 - Standard Specification for Aluminum and Aluminum-Alloy Extruded Bars, Rods, Wire, Profiles, and Tubes.

E. ASTM B456 - Standard Specification for Electrodeposited Coatings of Copper Plus Nickel Plus Chromium and Nickel Plus Chromium.

F. ASTM B633 - Standard Specification for Electrodeposited Coatings of Zinc on Iron and Steel.

G. ASTM C509 - Standard Specification for Elastomeric Cellular Preformed Gasket and Sealing Material.

H. ASTM C864 - Standard Specification for Dense Elastomeric Compression Seal Gaskets, Setting Blocks, and Spacers.

I. ASTM E283/E283M - Standard Test Method for Determining Rate of Air Leakage Through Exterior Windows, Skylights, Curtain Walls, and Doors Under Specified Pressure Differences Across the Specimen.

J. ASTM E330/E330M - Standard Test Method for Structural Performance of Exterior Windows, Doors, Skylights and Curtain Walls by Uniform Static Air Pressure Difference.

K. ASTM E331 - Standard Test Method for Water Penetration of Exterior Windows, Skylights, Doors, and Curtain Walls by Uniform Static Air Pressure Difference.

L. IBC - International Building Code.

M. ICC A117.1 - Accessible and Usable Buildings and Facilities.

N. NFRC (CPD) - Certified Product Directory - National Fenestration Rating Council.

O. WAC 51-50 - Washington Administrative Code, State of Washington Building Code.

1.05 SUBMITTALS

A. Refer to Section 01 3300 for submittal procedures.

B. Product Data: Provide manufacturer's data on frames, doors and hardware.

C. Shop Drawings:

1. Indicate layout and dimensions; head, jamb, and sill conditions; elevations; components, anchorage, recesses, materials, and finishes.

2. Identify installation tolerances required, assembly conditions, routing of service lines and conduit, and locations of operating components and boxes.

D. Samples: Submit two (2) 3-inch x 4-inch samples of specified finish (actual finish on aluminum).

E. Installer Qualifications (Upon Request Only): Provide list of at least 5 recently completed projects with addresses and contact phone numbers within 50 miles of this project upon request.

F. Certification: Provide evidence of NFRC (CPD) certification for the aluminum storefront and glazing being provided for this Project showing conformance to the Energy Performance requirements included in this section.

1. Provide any additional documentation required by the Code Authority Having Jurisdiction to show Code conformance.

1.06 QUALITY ASSURANCE

A. Manufacturer Qualifications: Company specializing in manufacturing products specified in this section, with a minimum of five (5) years of experience.

B. Installer Qualifications: Company specializing in the installation of products specified in this section on projects of similar scope and complexity, with a minimum of five (5) years of documented experience.

1. Installer shall employ only skilled, journeyman workers to install the work of this section.

2. Provide list of at least five (5) recently completed projects with addresses and contact phone numbers within 50 miles of this project upon request.

C. Regulatory Requirements:

1. Code Compliance: Comply with WAC 51-50 Washington State Building Code amendments to the International Building Code (IBC).

2. Accessibility Compliance: Doors shall meet the requirements of ADA Standards, and ICC A117.1, Accessible and Usable Building and Facilities.

3. ADA Standards Accessibility Tolerances: Comply with ADA Standards tolerances shown on the Drawings.

1.07 PRE-INSTALLATION CONFERENCE

A. Participate in the Pre-Installation Conference as specified in Section 07 2700.

1.08 DELIVERY, STORAGE AND HANDLING

A. Protect finished surfaces as necessary to prevent damage.

B. Do not use adhesive papers or sprayed coatings which become firmly bonded when exposed to sun.

C. Do not leave coating residue on any surfaces.

D. Replace damaged units.

1.09 WARRANTY

A. Contractor Warranty: Contractor shall warrant installed storefront system and windows for a period of five (5) years to be watertight and free of leaks, free from defective materials, defective workmanship, glass breakage due to defective design, and shall replace any components that fails or is found to be defective upon notification by the Owner. Warranty shall cover the following:

1. Complete watertight and airtight system installation within specified tolerances.

2. Completed installation will remain free from rattles, wind whistles and noise due to thermal movement and wind pressure.

3. System is structurally sound and free from distortion.

4. Glass and glazing gaskets will not break or "pop" from frames due to design, wind load pressure, expansion or contraction movement or structural loading.

5. Glazing sealants and gaskets will remain free from abnormal deterioration or dislocation due to sunlight, weather or oxidation.

B. Thermal Break Structural Integrity Warranty: Provide ten (10) year manufacturer’s warranty against failure resulting from longitudinal or transverse shrinkage, cracking or loss of adhesion or prescribed pressure on the glazed material.

C. Finish Warranty: Provide written warranty stating organic coating finish will be free from fading more than 10%, chalking, yellowing, peeling, cracking, pitting, corroding or non-uniformity of color, or gloss deterioration beyond manufacturer's descriptive standards for two (2) years from date of Substantial Completion and agreeing to promptly correct defects.

PART 2 PRODUCTS

2.01 MANUFACTURERS

A. Manufacturer / Product: Products by Kawneer are the basis of design and the standard of quality, function, performance and appearance required for this project.

1. Kawneer (specified, basis of design).

2. Products by the following manufacturers may be acceptable, subject to their ability to meet or exceed this standard and provide products conforming with the requirements of the Drawings and this Specification:

a. EFCO.

b. Oldcastle Building Envelope.

c. U.S. Aluminum.

d. Wausau.

3. Substitutions: Refer to Section 01 6000 for substitution procedures and requirements. Proposed substitutions must match specified product performance and colors.

2.02 ALUMINUM FRAMED STOREFRONT SYSTEM

A. Product: *Trifab VG 451T (2-inch x 4-1/2-inch) Thermal System.*

1. Provide center glazed system as shown on the Drawings.

B. General: Extruded aluminum framing system complete with all related connections and anchorages. Provide components required for a complete and functional installation that is leak free and conforming to manufacturer's published performance requirements. In addition to the standard framing members provide the following special members:

1. Subsill: Manufacturer's standard high performance flashing with end dams.

2. Head Compensating Channel: Manufacturer's standard head compensating receptor.

3. Jamb Filler: Provide continuous filler fabricated from rigid vinyl or thermally broken aluminum in one (1) piece (no joints) installed at back side of jamb members to allow adequate depth for sealant and rod installation at storefront framing perimeter.

4. Provide stops at door frames, with brush weatherstripping.

C. Materials:

1. Extruded Aluminum: Alloy 6063-T5 conforming to ASTM B221.

2. Internal Reinforcing: Aluminum, nonmagnetic stainless steel, or zinc-coated steel or iron complying with ASTM B456 for SC 3 severe service conditions, or zinc-coated steel or iron complying with ASTM B633 for SC 3 severe service conditions or other suitable zinc coating; provide sufficient strength to withstand design pressure indicated.

3. Fasteners: Stainless steel, type recommended by storefront manufacturer for substrate conditions / materials.

4. Expansion Anchor Devices: Stainless steel, toothed-steel, drilled-in, expansion bolt anchors.

5. Shims: Hard plastic, horseshoe shaped, available in different thicknesses as required.

6. Glazing Gaskets: EPDM elastomeric extrusion conforming to ASTM C509 or ASTM C864; profile and hardness as required to maintain uniform pressure for watertight seal, black color.

D. Glazing: 1-inch sealed insulating glass units specified in Section 08 8000.

E. "Anti-Walk" Edge Blocking: "W" shaped EPDM blocks for use in keeping glazing material stationary under vibration or seismic loading.

F. Baffles (at weep holes): Type as recommended by system manufacturer and shown in published installation instructions.

G. Sealant:

1. Internal (Within Storefront Framing) Sealant:

a. Manufacturer / Product: DowSil, *795 Silicone Building Sealant* is the basis of design and the standard of quality, function and performance required for this project.

1) DowSil; *795 Silicone Building Sealant* (specified, basis of design).

2) Products by other manufacturers may be acceptable, subject to their ability to meet or exceed this standard and provide products conforming with the requirements of the Drawings and this Specification.

3) Substitutions: Refer to Section 01 6000 for substitution procedures and requirements. Proposed substitutions must match specified product performance.

2. External (To Adjacent Construction) Sealant:

a. Exterior (Primary) Sealant: Match frame color.

1) Manufacturers / Products: Subject to their ability to conform to the requirements of the Drawings and this Specification, the following manufacturers / products may be provided:

a) DowSil; *795 Silicone Building Sealant.*

b) Tremco; *Spectrem 2.*

c) Pecora; *895.*

d) Substitutions: Refer to Section 01 6000 for substitution procedures and requirements. Proposed substitutions must match specified products performance and colors.

b. Interior (Secondary) Sealant:

1) Manufacturer / Product: DowSil, *758 Silicone Weather Barrier Sealant* is the basis of design and the standard of quality, function, performance and appearance required for this project.

a) DowSil; *758 Silicone Weather Barrier Sealant* (specified, basis of design).

b) Products by other manufacturers may be acceptable, subject to their ability to meet or exceed this standard and provide products conforming with the requirements of the Drawings and this Specification.

c) Substitutions: Refer to Section 01 6000 for substitution procedures and requirements. Proposed substitutions must match specified product performance and colors.

c. Provide primer, joint cleaner, joint backing and bond breaker as recommended by manufacturer.

3. Spray Foam Sealant (For Gap Filler): Spray polyurethane foam sealant in a canister.

a. Manufacturer / Product: Dow, *Great Stuff Pro Window and Door Insulating Foam Sealant* is the basis of design and the standard of quality, function and performance required for this project.

1) DowSil; *Great Stuff Pro Window and Door Insulating Foam Sealant* (specified, basis of design).

2) Products by other manufacturers may be acceptable, subject to their ability to meet or exceed this standard and provide products conforming with the requirements of the Drawings and this Specification.

3) Substitutions: Refer to Section 01 6000 for substitution procedures and requirements. Proposed substitutions must match specified product performance.

2.03 ALUMINUM ENTRANCE DOORS

A. Product: *500T Insulpour Thermal Entrance.*

1. Door Thickness: 2-1/4-inches.

2. Side Rails: 5-inches wide.

3. Bottom Rail: 10-inches wide.

4. Top Rail: 5-inches wide.

5. Wall Thickness: 1/8-inch.

6. Corner Construction: Welded corner construction.

7. Thermal Break: IsoPour Thermal Break.

8. Provide Kawneer Panic Guard Astragal on each pair of doors.

B. Hardware: Specified in Section 08 7100, installed by this section.

1. In addition to the hardware specified in Section 08 7100 provide the following:

a. Sill Sweep Strips: Concealed sill sweep.

b. Concrete Anchors for Threshold: Type 304 stainless steel sleeve anchors, 3-inch length minimum; Red Head Dynabolt or similar.

2.04 FABRICATION

A. Take accurate field measurements to verify required dimensions prior to fabrication.

B. Fabricate components in accordance with approved shop drawings and manufacturer's fabrication instructions.

1. Remove burrs and smooth edges.

2. Shop fabricate to greatest extent practicable to minimize field cutting, splicing and assembly.

3. Disassemble only to extent necessary for shipping and handling limitations.

C. Fabricate components true to detail and free from defects impairing appearance, strength or durability.

D. Fabricate components to allow for accurate and rigid fit of joints and corners. Match components carefully ensuring continuity of line and design. Ensure joints and connections will be flush and weathertight. Ensure slip joints make full, tight contact and are weathertight.

E. Maintain accurate relation of planes and angles, with hairline fit of contacting members.

F. Cut, reinforce, drill and tap doors and frames to receive door hardware specified herein and in Section 08 7100; use concealed fasteners wherever possible.

G. Reinforce components as required at anchorage and support points, at joints, and at attachment points for interfacing work.

H. Provide structural reinforcing within framing members where required to maintain rigidity and accommodate design loads.

I. Install end dams in sill and subsill members to contain water within sill and prevent any leaks into building interior.

J. Provide weep holes or slots, deflector plates, internal flashings, and sealants to accommodate internal weepage draining water to the exterior and prevent any leaks to building interior.

K. Provide tight fitting, injection molded, plastic water deflectors at intermediate horizontals.

L. Allow for adequate clearance around perimeter of system to enable proper installation and for thermal movement within system.

M. Separate dissimilar metals with protective coating or preformed separators to prevent contact and corrosion.

N. Doors: Fabricate with mechanical joints using internal reinforcing plates and shear blocks attached with fasteners and by welding.

2.05 FINISH

PART 3 EXECUTION

3.01 COORDINATION

A. Review, coordinate and accommodate work of other trades that interface with, affect or are affected by the work of this section so as to facilitate the execution of the overall Work of this project in a coordinated and efficient manner.

B. Coordinate the size and layout of reinforcement and preparation for door hardware with Section 08 7100.

C. Coordinate with installation of air and water barrier and flexible flashing specified in Section 07 2719.

D. Coordinate installation of window frames with sheet metal window sills / sillpan specified in Section 07 6200.

3.02 EXAMINATION

A. Verify that openings are ready to receive work and dimensions are as indicated on shop drawings. Do not start installation until openings and conditions are acceptable.

B. Start of installation indicates installer's acceptance of openings and site conditions.

3.03 INSTALLATION – ALUMINUM STOREFRONT

A. Install storefront system in accordance with manufacturer's instructions, attach frame securely to building structure as recommended by manufacturer and required to resist dead and live loads.

1. Storefront system shall be installed so as to provide a completely weathertight and leak-free barrier between interior and exterior of building.

B. Subsills: Seal fasteners and end dams watertight after installing subsill.

C. Sills: Seal penetrations of sheet metal sill / sillpan installed by Section 07 6200 watertight when anchoring subsill to structure.

D. Align assemblies plumb and level, free of warp or twist, aligning with adjacent Work.

E. Install fasteners, anchors and shims to permanently fasten framing members securely to building structure in accordance with storefront manufacturer's attachment instructions and fastener manufacturer's installation instructions.

1. Seal each fastener head / penetration permanently watertight with sealant.

F. Anchor securely in place, allowing for required movement, including expansion and contraction.

G. Separate dissimilar materials at contact points, including metal in contact with masonry or concrete surfaces, with protective coating or preformed separators to prevent contact and electrolytic action.

H. Seal perimeter members to adjacent construction as shown on manufacturer's installation instructions and as specified in Section 07 9000.

1. Set and seal other members with internal sealants and baffles as called for in manufacturer's installation instructions.

2. Seal both the interior and exterior sides of the entire perimeter of storefront frames to adjacent construction with continuous backer rod and sealant.

I. Glazing: Install glazing, setting blocks, spacer shims, edge blocking and glazing gaskets specified in Section 08 8000 and this section in accordance with storefront manufacturer's installation instructions without exception, including surface preparations.

1. Utilize "anti-walk" edge blocking on vertical edges of glazing.

J. Doors and Hardware: Install in accordance with manufacturer's printed instructions and Section 08 7100; adjust for proper operation.

1. Thresholds: Set in full, thick bed of butyl sealant; secure in place with Type 304 stainless steel sleeve anchors in lieu of standard plastic shield anchors supplied with threshold.

2. ADA Standards Accessibility Clearances and Tolerances: Comply with ADA Standards door clearances and tolerances shown on the Drawings.

K. Installation shall be completely watertight upon completion.

L. Installation Tolerances:

1. Limit variations from plumb and level:

a. 1/8-inch in 10 feet vertically.

b. 1/8-inch in 20 feet horizontally.

2. Limit Variations from Theoretical Locations: 1/4 inch for any member at any location.

3. Limit offsets in theoretical end-to-end and edge-to-edge alignment: 1/16-inch from flush surfaces not more than 2-inches apart or out-of-flush by more than 1/4-inch.

4. In no case shall any tolerances listed result in any door touching the frame or not opening / closing properly.

5. ADA Standards Accessibility Clearances and Tolerances: Comply with ADA Standards door clearances and tolerances shown on the Drawings.

3.04 INSTALLATION – SEALANT TO ADJACENT CONSTRUCTION

A. Exterior (Primary) Sealant Joint: Seal exterior side of frame perimeter to adjacent construction to achieve an airtight and watertight seal in conformance with sealant manufacturer's installation requirements.

B. Interior (Secondary) Sealant Joint: Seal interior side of frame perimeter to adjacent construction (concealed behind interior finishes) to achieve an airtight and watertight seal in conformance with sealant manufacturer's installation requirements.

3.05 ADJUSTING

A. Test door operating functions. Adjust closing and latching speeds and other hardware in accordance with manufacturer's instructions to ensure smooth operation.

B. Adjust operating window components to provide a tight fit at contact points and at weatherstripping for smooth operation and a weathertight closure.

3.06 CLEANING

A. Remove temporary labels and protection.

B. Wash surfaces by method recommended and acceptable to sealant and storefront manufacturer; rinse and wipe surfaces clean.

C. Remove excess sealant by moderate use of mineral spirits or other solvent acceptable to sealant and storefront manufacturer.

3.07 PROTECTION

A. Protect completed storefront installation from construction related damage and abuse.

3.08 FIELD QUALITY CONTROL

A. Contractor Quality Control: Employ / assign quality control personnel to monitor the work of this section for conformance to the requirements of the Contract Documents and to good construction practices.

1. Contractor is solely responsible for managing and controlling the quality of the work and conformance with the requirements of the Contract Documents.

3.09 SCHEDULE – REFER TO DRAWINGS

END OF SECTION

SECTION 08 4115

ALUMINUM FOLDING GLASS WALL SYSTEM

PART 1 GENERAL

1.01 RELATED DOCUMENTS

A. Drawings and general provisions of the Contract, including General Conditions, Supplementary Conditions and Divisions 00 and 01 Specification Sections, apply to work of this section

1.02 SECTION INCLUDES

A. Aluminum Folding Glass Wall System.

1.03 PERFORMANCE REQUIREMENTS

A. System Design: Design and size components to withstand dead and live loads caused by pressure and suction of wind acting normal to plane of folding glass wall as calculated in accordance with applicable code.

B. Wall system when tested on a typical four panel folding wall unit, 126.75-inches in width and 84.5-inches in height shall meet or exceed the following performance tests.

1. Air Infiltration Test: ASTM E283/E283M:

   a. Force of 1.57 psf (25 mph) = 0.03 cfm / ft^2 infiltration.

   b. Force of 6.24 psf (50 mph) = 0.06 cfm / ft^2 infiltration.

2. Water Penetration Test: ASTM E331 and ASTM E547:

   a. Water Pressure of 9.75 psf and 5.0 gph / ft^2 = No Leakage.

3. Uniform Structural Load Test: ASTM E330/E330M:

   a. Force of 120.0 psf Exterior = 0.008-inch permanent set (overload).

   b. Force of 120.0 psf Interior = 0.004-inch permanent set (overload).

   c. Approximately 215 mph wind load.

4. Thermal Penetration Test: AAMA 1503:

   a. Thermal Transmittance (U Value) = 0.47 btu / hr / ft^2 / Degrees F.

   b. Condensation Resistance Factor (CRF) = 54.

1.04 REFERENCES

A. References shall be the edition current as of the date of the Contract Documents.

B. AAMA 611 - Voluntary Specification for Anodized Architectural Aluminum.

C. AAMA 1503 - Voluntary Test Method for Thermal Transmittance and Condensation Resistance of Windows, Doors and Glazed Wall Sections.

D. ASTM A36/A36M - Standard Specification for Carbon Structural Steel.

E. ASTM B221 - Standard Specification for Aluminum and Aluminum-Alloy Extruded Bars, Rods, Wire, Profiles, and Tubes.

F. ASTM B241/B241M - Standard Specification for Aluminum and Aluminum-Alloy Seamless Pipe and Seamless Extruded Tube.

G. ASTM C864 - Standard Specification for Dense Elastomeric Compression Seal Gaskets, Setting Blocks, and Spacers.

H. ASTM C1115 - Standard Specification for Dense Elastomeric Silicone Rubber Gaskets and Accessories.

I. ASTM E283/E283M - Standard Test Method for Determining Rate of Air Leakage Through Exterior Windows, Skylights, Curtain Walls, and Doors Under Specified Pressure Differences Across the Specimen.

J. ASTM E330/E330M - Standard Test Method for Structural Performance of Exterior Windows, Doors, Skylights and Curtain Walls by Uniform Static Air Pressure Difference.

K. ASTM E331 - Standard Test Method for Water Penetration of Exterior Windows, Skylights, Doors, and Curtain Walls by Uniform Static Air Pressure Difference.

L. ASTM E547 - Standard Test Method for Water Penetration of Exterior Windows, Skylights, Doors, and Curtain Walls by Cyclic Static Air Pressure Difference.

1.05 SUBMITTALS

A. Refer to Section 01 3300 for submittal procedures.

B. Product Data: Provide manufacturer's data on frames, doors, and hardware.

C. Shop Drawings:

1. Indicate layout and dimensions; head, jamb, and sill conditions; elevations; components, anchorage, recesses, materials, and finishes.

2. Identify installation tolerances required, assembly conditions, routing of service lines and conduit, and locations of operating components and boxes.

D. Installer Qualifications (Upon Request Only): Provide list of at least five (5) recently completed projects with addresses and contact phone numbers within 50 miles of this project upon request.

1.06 QUALITY ASSURANCE

A. Manufacturer Qualifications: Company specializing in manufacturing products specified in this section, with a minimum of ten (10) years of experience.

B. Installer Qualifications: Company specializing in the installation of products specified in this section on projects of similar scope and complexity, with a minimum of five (5) years of documented experience.

1. Installer shall employ only skilled, journeyman workers to install the work of this section.

1.07 DELIVERY, STORAGE AND HANDLING

A. Store products in manufacturer's unopened packaging until ready for installation.

B. Protect factory finishes from damage, precipitation and construction materials until ready for installation.

1.08 PROJECT CONDITIONS

A. Maintain environmental conditions (temperature, humidity, and ventilation) within limits recommended by manufacturer for optimum results. Do not install products under environmental conditions outside manufacturer's absolute limits.

1.09 WARRANTY

A. Provide glazed structure manufacturer's warranty that properly installed structure will be free from significant defects in material, workmanship, and uncontrolled water leakage for five (5) years from date of Substantial Completion.

B. Warranty anodized aluminum finish for five (5) years.

C. For glazing, provide glazing manufacturer's standard warranty against defective materials, delamination, seal failure, and defects in manufacturing for at least five (5) years.

PART 2 PRODUCTS

2.01 ALUMINUM FOLDING GLASS WALL SYSTEM

A. Manufacturer / Product: Solar Innovations, *Series SI3000 Folding Glass Wall Systems* is the basis of design and the standard of quality, function, performance and appearance required for this project.

1. Solar Innovations; *Series SI3000 Folding Glass Wall Systems* (specified, basis of design).

2. Products by other manufacturers may be acceptable, subject to their ability to meet or exceed this standard and provide products conforming with the requirements of the Drawings and this Specification.

3. Substitutions: Refer to Section 01 6000 for substitution procedures and requirements. Proposed substitutions must match specified product performance and colors.

B. General: Provide folding glass walls factory assembled and glazed, complete with weatherstripping, glazing, operating hardware and specified accessories. Wall system shall be provided to fit the openings indicated on the Drawings and as follows:

1. Panel Size: Refer to Drawings.

2. Operation:

a. Out-folding system.

b. Top load suspension system.

3. Glazing Panels: 1-inch sealed insulating glass specified in Section 08 8000.

4. Framing: Extruded aluminum frame with thermo break separation.

5. Accessories:

a. Moldings.

b. Sill Cover.

c. Perimeter Weather Gaskets: EPDM with solid strand cord.

6. Hardware:

a. Triple knuckle aluminum and stainless corrosion proof hinges.

b. Stainless steel bearings.

c. Flushbolts on folding doors.

d. 3-point locks on swing doors.

C. Materials:

1. Aluminum: 6063-T6, 6063-T5, or 6105-T5 alloy and temper. Other alloys and tempers may be used for non-structural members provided they do not void the required warranties. Indicate alloys and tempers clearly on shop drawings and in structural calculations.

a. Framing Members: Thickness based on the design loading, cross sectional configuration, and fabrication requirement.

b. Aluminum Flashing and Closures: Minimum of 0.040-inches thick.

c. Snap-On Covers and Miscellaneous Non-Structural Trim: Minimum thickness recommended by the manufacturer.

2. Glazing: Refer to Section 08 80000.

3. Flashings: Sheet aluminum, same finish as for system components; secured with concealed fastening method or fastener with head finished to match; thickness as required for conditions encountered.

4. Thermal Break: Manufacturer's standard system to provide thermal separation between exterior and interior components.

5. Internal Reinforcing:

a. ASTM A36/A36M for carbon steel; or ASTM B221 and ASTM B241/B241M for structural aluminum.

b. Shapes and sizes to suit installation.

c. Shop coat steel components after fabrication with manufacturer recommended primer.

6. Glazing Gaskets: Compression type design, replaceable; EPDM, complying with ASTM C864, with solid strand cord to prevent shrinkage or; Elastomeric silicone with solid strand cord to prevent shrinkage, complying with ASTM C1115, as recommended by the manufacturer.

a. Completely compatible with glazing sealant to be used.

b. Profile and hardness as necessary to maintain uniform pressure for watertight seal.

c. Manufacturer's standard black color.

d. Factory molded corners required at interior.

7. Setting Blocks, Edge Blocks, and Spacers: As required by manufacturer and compatible with insulated glass where required.

8. Structural Glazing Sealant: GE *SilPruf*; Black.

9. Perimeter Sealant: GE *SilPruf*; color to match framing finish if available; otherwise color as selected from manufacturer's standard range.

10. Anchors and Fasteners:

a. Aluminum and stainless steel of type which will not cause electrolytic action or corrosion.

b. Zinc cadmium-plated fasteners may be used if acceptable to manufacturer.

c. Finish exposed fasteners to match aluminum frame.

11. Accessories: Provide accessories as scheduled to achieve design intent and environmental control.

12. Aluminum Finish: Anodized complying with AAMA 611.

a. Colors: _____.

13. Keyed Cylinder: Specified in Section 08 7100.

2.02 FABRICATION

A. Take accurate field measurements to verify required dimensions prior to fabrication.

B. Fabricate components in accordance with approved shop drawings. Remove burrs and rough edges. Shop fabricate to greatest extent practicable to minimize field cutting, splicing, and assembly. Disassemble only to extent necessary for shipping and handling limitations. Install gaskets and tapes in factory.

C. Welding:

1. Comply with recommendations of American Welding Society.

2. Grind exposed welds smooth and flush with adjacent surfaces before finishing; restore mechanical finish.

D. Steel Components:

1. Clean surfaces after fabrication and immediately prior to application of primer in accord with manufacturer's recommendations.

2. Apply specified shop coat primer in accord with manufacturer's instructions to provide 2.0 mil minimum dry film thickness.

E. Fabricate components true to detail and free from defects impairing appearance, strength or durability. Contour outdoor horizontal glazing to minimize water ponding and ice or snow buildup.

F. Fabricate components to allow for accurate and rigid fit of joints and corners. Match components carefully ensuring continuity of line and design. Ensure joints and connections will be flush and weathertight. Ensure slip joints make full, tight contact and are weathertight.

G. Reinforce components at anchorage and support points, at joints, and at attachment points for interfacing work.

H. Glass: Accurately size glass to fit openings allowing clearances following recommendations of "Glazing Manual" published by Flat Glass Marketing Association.

I. Cut glass clean and carefully. Nicks and damaged edges will not be accepted. Replace glass that has damaged edges.

PART 3 EXECUTION

3.01 COORDINATION

A. Review, coordinate and accommodate work of other trades that interface with, affect or are affected by the work of this section so as to facilitate the execution of the overall Work of this project in a coordinated and efficient manner.

B. Coordinate installation of aluminum folding glass wall system with sheet metal flashings specified in Section 07 6200

3.02 EXAMINATION

A. Do not begin installation until substrates have been properly prepared.

B. Verify openings are ready to receive work and dimensions and clearances are as indicated on the approved shop drawings.

C. If preparation is the responsibility of another installer, notify Architect of unsatisfactory preparation before proceeding.

3.03 PREPARATION

A. Clean surfaces thoroughly prior to installation.

B. Prepare surfaces using the methods recommended by the manufacturer for achieving the best result for the substrate under the project conditions.

3.04 INSTALLATION

A. Install aluminum folding glass wall system in accordance with manufacturer's installation instructions; attach frame and tracks securely to building structure as recommended by manufacturer and required to resist dead and live loads.

B. Align assemblies plumb and level, free of warp or twist, aligning with adjacent Work.

C. Separate dissimilar materials using nonconductive tape, paint, or other material not visible in finished work.

D. Provide attachments and shims to permanently fasten system to building structure.

E. Maintain dimensional tolerances and alignment with adjacent Work.

F. Anchor securely in place, allowing for required movement, including expansion and contraction.

G. Install glazing and sealants in accordance with manufacturer's instructions without exception, including surface preparations.

H. Set sill members in bed of sealant. Set other members with internal sealants to provide weathertight construction.

I. Install flashings, closures, corners, and other accessories as required or detailed.

J. Clean surfaces and install sealant in accordance with sealant manufacturer's instructions and structure manufacturer's guidelines

K. Install hardware securely to door and frame in accordance with manufacturer's installation instructions.

1. Maintain consistent gaps between door and frame.

2. Drill and tap holes for screw attachment of hardware.

3. Use stainless steel screws at all exposed locations.

3.05 ADJUSTING

A. Adjust hinge sets, locksets, and other hardware for proper operation. Lubricate using a suitable lubricant compatible with door and frame coatings.

3.06 CLEANING

A. Remove temporary coverings and protection of adjacent work areas. Repair or replace damaged installed products. Clean installed products in accordance with manufacturer's instructions before owner's acceptance.

B. Any abraded surface of the finish shall be cleaned and touched up with air dry paint, as approved and furnished by the window manufacturer, in a color to match factory applied finish.

C. Remove from project site and legally dispose of construction debris associated with this work.

3.07 PROTECTION

A. Protect installed products until completion of project.

B. Touch-up, repair or replace damaged products before Substantial Completion.

3.08 FIELD QUALITY CONTROL

A. Contractor Quality Control: Employ / assign quality control personnel to monitor the work of this section for conformance to the requirements of the Contract Documents and to good construction practices.

1. Contractor is solely responsible for managing and controlling the quality of the work and conformance with the requirements of the Contract Documents.

END OF SECTION

SECTION 08 8000

GLASS AND GLAZING

PART 1 GENERAL

1.01 RELATED DOCUMENTS

A. Drawings and general provisions of the Contract, including General Conditions, Supplementary Conditions and Divisions 00 and 01 Specification Sections, apply to work of this section.

1.02 SECTION INCLUDES

A. Clear Flat Glass.

B. Fire-Rated Glass.

C. Low-Emissivity (Low-E) Coating.

D. Glazing Accessories.

E. Insulating Glass Units.

1.03 REFERENCES

A. References shall be the edition current as of the date of the Contract Documents.

B. 16 CFR 1201 - Safety Standard for Architectural Glazing Materials.

C. ANSI Z97.1 - American National Standard for Safety Glazing Materials Used in Buildings - Safety Performance Specifications and Methods of Test.

D. ASTM C864 - Standard Specification for Dense Elastomeric Compression Seal Gaskets, Setting Blocks, and Spacers.

E. ASTM C1048 - Standard Specification for Heat-Strengthened and Fully Tempered Flat Glass.

F. ASTM C1376 - Standard Specification for Pyrolytic and Vacuum Deposition Coatings on Flat Glass.

G. ASTM E2190 - Standard Specification for Insulating Glass Unit Performance and Evaluation.

H. CPSC - Consumer Product Safety Commission.

I. GANA (GM) - GANA Glazing Manual.

J. GANA (SM) - GANA Sealant Manual.

K. UL (FRD) - Fire Resistance Directory.

1.04 SUBMITTALS

A. Refer to Section 01 3300 for submittal procedures.

B. Product Data: Provide manufacturer's descriptive literature and performance data on each different type of glass and insulated glass unit and insulated composite metal panel unit specified.

C. Energy Performance: Provide energy performance data as required for showing conformance to the energy performance requirements specified for each exterior storefront assembly in Section 08 4113.

1.05 PERFORMANCE REQUIREMENTS

A. Glass Thickness: Except where glass thickness is noted, select thickness of exterior glass to withstand dead loads and positive and negative live loads acting normal to plane of glass at design pressures calculated in accordance with requirements in the International Building Code and State / local codes.

1. Limit glass deflection to 1/200 or flexure limit of glass, whichever is less, with full recovery of glazing materials.

1.06 QUALITY ASSURANCE

A. Perform Work in accordance with GANA (GM) Glazing Manual and GANA (SM) Sealant Manual for glazing installation methods.

B. Fabricator, Sealed Insulating Glass Units: Minimum of five (5) years of documented experience producing sealed insulating glass units specified in this section.

C. Installer Qualifications: Company specializing in the installation of products specified in this section on projects of similar scope and complexity, with a minimum of five (5) years of documented experience. Upon request, provided listing of projects completed within the last two (2) years along names and contact information of general contractors and building owner representative for each project.

1.07 ENVIRONMENTAL REQUIREMENTS

A. Do not install glazing when ambient temperature is less than 50 degrees F.

B. Maintain minimum ambient temperature before, during and 24 hours after installation of glazing compounds.

1.08 WARRANTY

A. Sealed Insulating Glass Units: Shall be warranted for a period of ten (10) years against seal failure, interpane dusting or misting, and shall include removal of failed unit and replacement with new unit.

PART 2 PRODUCTS

2.01 CLEAR FLAT GLASS MATERIALS

A. Clear Heat Tempered Safety Glass: Fully heat tempered with horizontal tempering.

1. Clear tempered float glass complying with ASTM C1048, Type 1 (transparent flat), Class 1 (clear), Quality Q3 (glazing select), Kind HT.

2. Fully heat temper glass to comply with CPSC 16 CFR 1201 and ANSI Z97.1 impact safety standards.

3. Permanently etch one (1) corner of each piece of tempered glazing indicating compliance with ANSI Z97.1, locate etch mark so it is visible after installation.

2.02 FIRE-RATED GLASS MATERIALS

A. Clear Fire-Rated Safety Ceramic Glass:

1. Manufacturer / Product: TGP, *FireLite Plus* is the basis of design and the standard of quality, function, performance and appearance required for this project.

a. TGP; *FireLite Plus* (specified, basis of design).

b. Products by other manufacturers may be acceptable, subject to their ability to meet or exceed this standard and provide products conforming with the requirements of the Drawings and this Specification.

c. Substitutions: Refer to Section 01 6000 for substitution procedures and requirements. Proposed substitutions must match specified product performance and appearance.

2. Thickness: 5/16-inch.

3. Fire Rating: 20 minute, 45 minute, and 60 minute; UL (FRD) tested and listed.

4. Impact Safety Resistance: Comply with ANSI Z97.1 and CPSC 16 CFR 1201 Category II.

5. Permanently etch one (1) corner of each piece of glass indicating fire rating and FireLite logo; locate etch mark so it is visible after installation.

2.03 LOW-EMISSIVITY (LOW-E) COATING

A. Low-Emissivity (Low-E) Coating: Pyrolytic coating meeting the requirements of ASTM C1376.

B. Manufacturers / Products: Subject to their ability to conform to the requirements of the Drawings and this Specification, the following manufacturers / products may be provided:

1. Cardinal Glass Industries; *LoĒ³-366.*

2. Vitro Architectural Glass; *Solarban 60 Clear.*

3. Guardian; *SN 68.*

4. Viracon; *VE 1-2M.*

5. Substitutions: Refer to Section 01 6000 for substitution procedures and requirements. Proposed substitutions must match specified products performance and appearance.

2.04 GLAZING ACCESSORIES

A. Setting Blocks: Neoprene, 80 to 90 Shore A durometer hardness, ASTM C864 Option I. Length of 0.1-inch for each square foot of glazing or minimum 4-inch x width of glazing rabbet space minus 1/16-inch x height to suit glazing method and pane weight and area.

B. Spacer Shims: Neoprene, 50 to 60 Shore A durometer hardness, ASTM C864 Option I. Minimum 3-inch long x one half the height of the glazing stop x thickness to suit application, self-adhesive on one face.

C. Glazing Tape: Closed cell polyvinyl chloride foam, coiled on release paper over adhesive on two sides, maximum water absorption by volume of 2 percent, designed for compression of 25 percent to effect an air barrier and vapor retarder seal.

1. Fire-Rated Glazing: Glazing tape shall conform to fire listing requirements of the fire-rated glazing.

D. Glazing Gaskets for Aluminum Storefront and Entrances: Specified in Section 08 4113.

2.05 FABRICATION

A. Heat-Tempered Glass:

1. Cut float glass materials to indicated sizes and provide cut-outs and holes, if indicated, before heat strengthening.

2. Fully temper float glass materials in accordance with ASTM C1048, Kind FT.

3. Comply with CPSC 16 CFR 1201 and ANSI Z97.1.

4. Permanently etch one (1) corner of each piece of tempered glazing indicating compliance with ANSI Z97.1, locate etch mark so it is visible after installation.

B. Low-Emissivity Coated Glass: Fabricate using methods and equipment recommended by manufacturer; protect coating from damage.

C. Fire-Rated Safety Ceramic Glass: Fabricate using methods and equipment recommended by manufacturer.

2.06 FABRICATION – INSULATING GLASS UNITS

A. Sealed Insulating Glass Units:

1. Fabricate units in accordance with ASTM E2190 with components and performance characteristics specified in Schedule paragraph at the end of this section.

2. Components:

a. Glass Type and Heat Treatment: As specified in Schedule paragraph at the end of Part 3.

b. Air Space: Hermetically sealed, dehydrated air filled. Type of air specified in Schedule paragraph at the end of Part 3.

c. Performance Characteristics: As specified in Schedule paragraph at the end of Part 3.

3. Provide unit edge seals meeting requirements of ASTM E2190, with aluminum spacers having mitered corners, and silicone sealant for glass-to-spacer seals.

PART 3 EXECUTION

3.01 COORDINATION

A. Review, coordinate and accommodate work of other trades that interface with, affect or are affected by the work of this section so as to facilitate the execution of the overall Work of this project in a coordinated and efficient manner.

B. Coordinate the installation of glazing in steel frames and doors with Section 08 1100.

C. Coordinate the installation of glazing in wood doors with Section 08 1400.

D. Coordinate the installation of glazing with Specification sections referenced below.

3.02 EXAMINATION

A. Verify that openings for glazing are correctly sized and within tolerance.

B. Verify that surfaces of glazing channels or recesses are clean, free of obstructions that may impede moisture movement, weeps are clear, and ready to receive glazing.

C. Beginning of installation indicates acceptance of openings, substrate and conditions.

3.03 PREPARATION

A. Clean contact surfaces with solvent and wipe dry.

3.04 INSTALLATION – GENERAL

A. Install glazing in conformance with GANA (GM) Glazing Manual.

3.05 INSTALLATION – INTERIOR STEEL DOORS, STEEL FRAMES, AND WOOD DOORS – INTERIOR DRY METHOD (TAPE AND TAPE)

A. Cut glazing tape to length and set against permanent stops straight and true to line, do not project above sight line.

B. Place setting blocks at 1/4 points with edge block no more than 6-inches from corners.

C. Rest glazing on setting blocks and push against tape for full contact at perimeter of pane or unit.

D. Place glazing tape on free perimeter of glazing in same manner described above.

E. Install removable stop without displacement of tape. Exert pressure on tape for full continuous contact.

F. Knife trim protruding tape.

G. Workmanship: Glazing tape shall not extend beyond edge of stop or be installed crooked or wavy; remove and reglaze.

H. Fire-Rated Assemblies: Conform to fire rating requirements of glazing type and installation.

3.06 INSTALLATION – ALUMINUM STOREFRONT AND ENTRANCES

A. Glazing of aluminum storefront is specified in Section 08 4113.

3.07 CLEANING

A. Remove glazing materials from finish surfaces.

B. Remove labels after Work is complete.

C. Clean glass and adjacent surfaces.

3.08 PROTECTION

A. Protect installed products until completion of project.

B. Repair or replace damaged products before Substantial Completion.

3.09 GLAZING TYPE SCHEDULE (REFER TO DRAWINGS FOR LOCATIONS)

A. Refer to Section 08 4113 - Aluminum Storefront and Entrances for total assembly thermal performance requirements. Adjust insulating glass configuration as needed to meet those requirements while maintaining basic design intent and performance shown herein.

B. **GL-1:** 1-inch insulating glass unit with Clear Heat Tempered Safety Glass exterior pane (with Low-E coating on the number 2 surface) and Clear Heat Tempered Safety Glass interior pane. Center of glass values shall be as follows:

1. Visible Light Transmittance: 70% or better.

2. Shading Coefficient: 0.44 or better.

3. Solar Heat Gain Coefficient: 0.39 or better.

4. Air Space: 100% Argon.

C. **GL-2:** Single pane of 1/4-inch thick Clear Heat Tempered Safety Glass.

D. **GL-3:** Single pane of 5/16-inch thick Fire-Rated Safety Ceramic Glass (glass is fire-rated for 20 minutes, 45 minutes, and 60 minutes, refer to Drawings for locations of the ratings).

3.10 FIELD QUALITY CONTROL

A. Contractor Quality Control: Employ / assign quality control personnel to monitor the work of this section for conformance to the requirements of the Contract Documents and to good construction practices.

1. Contractor is solely responsible for managing and controlling the quality of the work and conformance with the requirements of the Contract Documents.

END OF SECTION

SECTION 08 9100

EXTERIOR WALL LOUVERS

PART 1 GENERAL

1.01 RELATED DOCUMENTS

A. Drawings and general provisions of the Contract, including General Conditions, Supplementary Conditions and Divisions 00 and 01 Specification Sections, apply to work of this section.

1.02 SECTION INCLUDES

A. Exterior Wall Louvers.

1.03 REFERENCES

A. References shall be the edition current as of the date of the Contract Documents.

B. AAMA 611 - Voluntary Specification for Anodized Architectural Aluminum.

C. AAMA 2605 - Voluntary Specification, Performance Requirements and Test Procedures for Superior Performing Organic Coatings on Aluminum Extrusions and Panels (with Coil Coating Appendix).

D. AMCA (DIR) - (Directory of) Products Licensed Under AMCA International Certified Ratings Program.

E. ASTM B221 - Standard Specification for Aluminum and Aluminum-Alloy Extruded Bars, Rods, Wire, Profiles, and Tubes.

1.04 SUBMITTALS

A. Refer to Section 01 3300 for submittal procedures.

B. Product Data: Provide data describing design characteristics, maximum recommended air velocity, design free area, materials and finishes.

C. Shop Drawings for Wall Louvers: Indicate louver layout plan and elevations, opening and clearance dimensions, tolerances; head, jamb and sill details; blade configuration, screens, blank off areas required and frames.

D. Test Reports: Independent agency reports showing compliance with specified performance criteria.

PART 2 PRODUCTS

2.01 EXTERIOR WALL LOUVERS

A. Manufacturer / Product: Ruskin, *ELF6375DX* is the basis of design and the standard of quality, function, performance and appearance required for this project. The following manufacturers are acceptable subject to their ability to provide products conforming to this standard:

1. Airolite.

2. American Warming and Ventilating.

3. Construction Specialties, Inc.

4. Greenheck.

5. Industrial Louvers, Inc.

6. Ruskin; *ELF6375DX* (specified, basis of design).

7. Substitutions: Refer to Section 01 6000 for substitution procedures and requirements. Proposed substitutions must match specified product performance and colors.

B. Materials:

1. Extruded Aluminum: Conform to ASTM B221.

2. Bird Screen: 3/4-inch x 0.051-inch expanded, flattened aluminum screen in a removable frame.

C. Accessories:

1. Screens: Frame of same material as louver, with reinforced corners; removable, screw attached; installed on inside face of louver frame.

2. Frame: Standard channel frame.

   a. Depth: 6-inch deep frame.

3. Mounting Clip Angles: Extruded aluminum clip angles on backside of louver for concealed mounting on interior side of louver to wall framing.

4. Fasteners and Anchors: Galvanized steel appropriate for conditions.

5. Sealant:

   a. Exterior (Primary) Sealant: Match frame color.

1) Manufacturers / Products: Subject to their ability to conform to the requirements of the Drawings and this Specification, the following manufacturers / products may be provided:

a) DowSil; *795 Silicone Building Sealant.*

b) Tremco; *Spectrem 2.*

c) Pecora; *895.*

d) Substitutions: Refer to Section 01 6000 for substitution procedures and requirements. Proposed substitutions must match specified products performance and colors.

b. Interior (Secondary) Sealant:

1) Manufacturer / Product: DowSil, *758 Silicone Weather Barrier Sealant* is the basis of design and the standard of quality, function, performance and appearance required for this project.

a) DowSil; *758 Silicone Weather Barrier Sealant* (specified, basis of design).

b) Products by other manufacturers may be acceptable, subject to their ability to meet or exceed this standard and provide products conforming with the requirements of the Drawings and this Specification.

c) Substitutions: Refer to Section 01 6000 for substitution procedures and requirements. Proposed substitutions must match specified product performance and colors.

c. Provide primer, joint cleaner, joint backing and bond breaker as recommended by manufacturer.

D. Fabrication:

1. Prior to fabrication, coordinate louver sizes to conform with mechanical requirements for free area, velocity, static pressure drop and duct size requirements; louver shall not exceed free area velocity beyond point of water penetration.

2. Intermediate support mullions shall not interrupt blade exterior appearance.

3. Fabricate louver in conformance with AAMA 611 and AMCA (DIR) certification requirements.

4. Factory Finish: Factory painted with 70% Kynar 500 or Hylar 5000 Fluoropolymer PVDF2 paint coating in accordance with AAMA 2605, custom color.

a. Colors: _____.

PART 3 EXECUTION

3.01 COORDINATION

A. Review, coordinate and accommodate work of other trades that interface with, affect or are affected by the work of this section so as to facilitate the execution of the overall Work of this project in a coordinated and efficient manner.

B. Coordinate preparation of wall openings.

C. Coordinate installation with work by mechanical contractor.

3.02 EXAMINATION

A. Verify that prepared openings are ready to receive work and opening dimensions are as indicated on shop drawings.

B. Verify that field measurements are as indicated on shop drawings.

3.03 INSTALLATION – EXTERIOR WALL LOUVERS

A. Install louver assembly in accordance with manufacturer's instructions.

B. Install louvers level and plumb.

C. Install louver assembly to ensure moisture shed from flashings and diversion of moisture to exterior.

D. Secure louver frames in openings with concealed fasteners.

3.04 CLEANING

A. Strip protective finish coverings.

B. Clean surfaces and components.

3.05 FIELD QUALITY CONTROL

A. Contractor Quality Control: Employ / assign quality control personnel to monitor the work of this section for conformance to the requirements of the Contract Documents and to good construction practices.

1. Contractor is solely responsible for managing and controlling the quality of the work and conformance with the requirements of the Contract Documents.

END OF SECTION

SECTION 09 2900

GYPSUM BOARD ASSEMBLIES

PART 1 GENERAL

1.01 RELATED DOCUMENTS

A. Drawings and general provisions of the Contract, including General Conditions, Supplementary Conditions and Divisions 00 and 01 Specification Sections, apply to work of this section.

1.02 SECTION INCLUDES

A. Interior Gypsum Board, Type X (GWB).

B. Water Resistant Panels, Paper Faced (WRGWB).

C. Finishing Gypsum Board.

1.03 REFERENCES

A. References shall be the edition current as of the date of the Contract Documents.

B. ASTM C475/C475M - Standard Specification for Joint Compound and Joint Tape for Finishing Gypsum Board.

C. ASTM C840 - Standard Specification for Application and Finishing of Gypsum Board.

D. ASTM C1002 - Standard Specification for Steel Self-Piercing Tapping Screws for Application of Gypsum Panel Products or Metal Plaster Bases to Wood Studs or Steel Studs.

E. ASTM C1280 - Standard Specification for Application of Exterior Gypsum Panel Products for Use as Sheathing.

F. ASTM C1396/C1396M - Standard Specification for Gypsum Board.

G. ASTM D3273 - Standard Test Method for Resistance to Growth of Mold on the Surface of Interior Coatings in an Environmental Chamber.

H. GA-214 - Levels of Finish for Gypsum Panel Products.

I. GA-216 - Application and Finishing of Gypsum Panel Products.

1.04 SUBMITTALS

A. Refer to Section 01 3300 for submittal procedures.

B. Product Data: Submit manufacturer's product data for each proposed product sufficient to show compliance with each product specified.

1.05 QUALITY ASSURANCE

A. Applicator Qualifications: Company specializing in performing the work of this section with a minimum of five (5) years of consecutive, successful experience.

1.06 DELIVERY, STORAGE AND HANDLING

A. Deliver materials in original and unopened packages, containers, or bundles, with brand names and manufacturer's labels intact and legible.

B. Store materials in dry location, fully protected from weather and direct exposure to sunlight.

C. Stack gypsum board products flat and level, properly supported to prevent sagging or damage to ends and edges.

D. Store corner bead and other metal and plastic accessories to prevent bending, sagging, distortion, or other mechanical damage.

1.07 PROJECT CONDITIONS

A. Environmental Conditions: Establish and maintain environmental conditions for applying and finishing gypsum board to comply with ASTM C840 requirements, gypsum board manufacturer's recommendations, and the following; where requirements conflict, the most stringent requirement shall govern:

1. Building Dry Out: Do not start installation of GWB until Initial Building Dry Out and Environmental Control of building is complete and operational as specified in Section 01 7343.

2. Wood Framing Moisture Content: Moisture content of wood-framing shall be 15% or less before starting GWB installation.

3. GWB Moisture Content: Do not begin taping and finishing of GWB until temperature of at least 50 degrees has been maintained for a period of 48 hours, and a GWB moisture content of 0.4% on a gypsum scale (12% on a wood scale) or less is achieved.

4. Lighting Level: Minimum of 15 candle power per square foot to be provided and maintained to assure quality workmanship.

5. Ventilation: Provide controlled ventilation during joint finishing operations, to eliminate excessive moisture. Avoid drafts during hot, dry weather to prevent finishing materials from drying too quickly.

PART 2 PRODUCTS

2.01 GYPSUM BOARD MATERIALS

A. Manufacturers / Products:

1. Fire-Rated Assemblies:

a. Fire-Rated Assemblies with Proprietary Manufacturers / Products: Use the manufacturers / products required by the fire-rated assemblies referenced on the Drawings that list proprietary manufacturers / products whether specified herein or not.

b. Fire-Rated Assemblies with Non-Proprietary (Generic) Manufacturers / Products: Use any of the specified products below in fire-rated assemblies referenced on the Drawings that list generic GWB products.

2. Non-Fire-Rated Assemblies: Use any of the products below at the locations noted on the Drawings.

B. Interior Gypsum Board, Type X (GWB): Conform to ASTM C1396/C1396M.

1. Manufacturers / Products: Subject to their ability to conform to the requirements of the Drawings and this Specification, the following manufacturers / products may be provided:

a. CertainTeed; *Type X Gypsum Board*.

b. GP Gypsum; *ToughRock Fireguard X*.

c. National Gypsum; *Gold Bond Brand Fire-Shield X Gypsum Board*.

d. U.S. Gypsum; *Sheetrock Firecode X Gypsum Panels*.

2. Thickness: As noted on the Drawings.

3. Edges: Tapered.

4. Size: Largest size practicable to minimize joints in place and for least number of butt joints.

5. Ends: Square cut.

6. Location: Standard interior gypsum board used throughout the Project unless noted otherwise.

7. Fire-Rated: Type X, fire-rated, tested in accordance with ASTM E119 or UL 263.

C. Water Resistant Panels, Paper Faced (WRGWB): Conform to ASTM C1396/C1396M and physical property requirements of ASTM D3273.

1. Manufacturers / Products: Subject to their ability to conform to the requirements of the Drawings and this Specification, the following manufacturers / products may be provided:

    a. CertainTeed; *M²TECH Moisture & Mold Resistant Drywall*.

    b. GP Gypsum; *ToughRock Mold-Guard Gypsum Board*.

    c. National Gypsum; *Gold Bond Brand XP Gypsum Board*.

    d. U.S. Gypsum; *Sheetrock Mold Tough Firecode X Panels*.

2. Thickness: As noted on the Drawings.

3. Edges: Tapered.

4. Size: Largest size practicable to minimize joints in place and for least number of butt joints.

5. Ends: Square cut.

6. Location: Where shown or indicated on Drawings.

7. Fire-Rated: Type X, fire-rated, tested in accordance with ASTM E119 or UL 263. Use at fire-rated walls noted on Drawings.

2.02 ACCESSORIES

A. Outside Square Corners: Galvanized metal corner bead factory clad with paper tape.

1. Manufacturer / Product: Beadex, *Microbead* is the basis of design and the standard of quality, function, performance and appearance required for this project.

    a. Beadex; *Microbead* (specified, basis of design).

    b. Products by other manufacturers may be acceptable, subject to their ability to meet or exceed this standard and provide products conforming with the requirements of the Drawings and this Specification.

    c. Substitutions: Refer to Section 01 6000 for substitution procedures and requirements. Proposed substitutions must match specified product performance and appearance.

B. J-Mold (Where GWB Abuts Dissimilar Material and Is Exposed to View): Galvanized metal J-shaped trim factory clad with paper.

1. Manufacturer / Product: Beadex, *B9J Tape-On "J" Trim* is the basis of design and the standard of quality, function, performance and appearance required for this project.

a. Beadex; *B9J Tape-On "J" Trim* (specified, basis of design).

b. Products by other manufacturers may be acceptable, subject to their ability to meet or exceed this standard and provide products conforming with the requirements of the Drawings and this Specification.

c. Substitutions: Refer to Section 01 6000 for substitution procedures and requirements. Proposed substitutions must match specified product performance and appearance.

2. GWB Abuts Windows: Provide temporary heavy weight cardboard strip 3-inches wide between trim and face of window frame to protect frame from dirt and damage.

C. Control Joint: GA 216; roll-formed metal control joint with removable strip.

1. Manufacturer / Product: U.S. Gypsum, *No. 93* is the basis of design and the standard of quality, function, performance and appearance required for this project.

a. U.S. Gypsum; *No. 93* (specified, basis of design).

b. Products by other manufacturers may be acceptable, subject to their ability to meet or exceed this standard and provide products conforming with the requirements of the Drawings and this Specification.

c. Substitutions: Refer to Section 01 6000 for substitution procedures and requirements. Proposed substitutions must match specified product performance and appearance.

D. Joint Materials: Provide products by manufacturer of gypsum board. Conform to ASTM C475/C475M and as recommended by gypsum board manufacturer for project conditions.

1. Interior Applications – Gypsum Board (except Water Resistant Panels): Ready-mixed vinyl-based joint compound:

a. Taping Compound: Type specifically formulated for embedding tape and accessories and for pre-filling.

b. Topping Compound: Type specifically formulated for finishing drywall over taping compound.

c. Joint Tape: Gypsum Board manufacturer's standard paper reinforcing tape.

2. Water Resistant Panels: Joint Compound recommended by specified panel manufacturers.

a. Manufacturers / Products: Subject to their ability to conform to the requirements of the Drawings and this Specification, the following manufacturers / products may be provided:

1) U.S. Gypsum; *Sheetrock Brand Durabond Setting-Type Joint Compound*.

2) U.S. Gypsum; *Sheetrock Brand Easy Sand Joint Compound*.

3) Substitutions: Refer to Section 01 6000 for substitution procedures and requirements. Proposed substitutions must match specified products performance and appearance.

b. Joint Tape: Paper tape product recommended by specified panel manufacturers.

1) Manufacturer / Product: U.S. Gypsum, Sheetrock Brand Joint Tape is the basis of design and the standard of quality, function, performance and appearance required for this project.

a) U.S. Gypsum; *Sheetrock Brand Joint Tape* (specified, basis of design).

b) Products by other manufacturers may be acceptable, subject to their ability to meet or exceed this standard and provide products conforming with the requirements of the Drawings and this Specification.

c) Substitutions: Refer to Section 01 6000 for substitution procedures and requirements. Proposed substitutions must match specified product performance and appearance.

E. Screws:

1. Interior Application: Conform to ASTM C1002; bugle-head steel, self-drilling type, black phosphate finish.

2. Water Resistant Panels: Provide with yellow zinc corrosion resistant coating.

F. Nails: Not allowed.

G. Sealer: Primer / Surfacer:

1. Manufacturers / Products: Subject to their ability to conform to the requirements of the Drawings and this Specification, the following manufacturers / products may be provided:

a. CertainTeed; *Level V Wall and Ceiling (Primer / Surfacer with M²Tech)*.

b. Hamilton *Drywall Products; Prep Coat (Level 5 Drywall Completion System)*.

c. U.S. Gypsum; *Primer-Surfacer Tuff-Hide*.

d. Substitutions: Refer to Section 01 6000 for substitution procedures and requirements. Proposed substitutions must match specified product performance and appearance.

PART 3 EXECUTION

3.01 COORDINATION

A. Review, coordinate and accommodate work of other trades that interface with, affect or are affected by the work of this section so as to facilitate the execution of the overall Work of this project in a coordinated and efficient manner.

B. Coordinate installation and requirements of fire-rated assemblies with other trades affected.

C. Coordinate installation of sound insulation by Section 07 2100.

D. Coordinate location of backing for supporting ends of GWB, control joints and reveals with Section 06 1000.

E. Inspect finished surfaces with Section 09 9000 painting applicator and project superintendent, mark areas that require additional finishing.

3.02 EXAMINATION

A. Confirm that the installation area(s) conform to the environmental conditions specified in Part 1 of this section.

B. Verify that project conditions are appropriate for work of this section to commence.

C. Confirm that the framing is straight, is within specified tolerances and meets minimum allowable deflection requirements.

D. Confirm that utility rough-in fits properly within framing width and will not prevent GWB from fitting tight to face of framing members.

E. Confirm that there is adequate temporary heat and light.

F. Do not start GWB installation until the conditions conform to requirements.

G. Beginning of installation indicates acceptance of framing and conditions.

3.03 FLOOR PROTECTION

A. Protect unsealed concrete and gypsum cement underlayment floors from contact with GWB dust, taping mud and primer / surfacer using heavy paper or other method.

3.04 INSTALLATION – GYPSUM BOARD

A. Install GWB in conformance with ASTM C840, ASTM C1280, GA-216, and manufacturer's installation instructions.

1. Install in longest lengths possible for minimum number of joints.

2. Install to minimize butt end joints, especially in highly visible locations.

3. Comply with the installation requirements of fire-rated assemblies listed on the Drawings.

4. Use screws for attachment of all gypsum board.

5. Water Resistant Panels: Use corrosion resistant screws, locate cut edges at top of walls only, screw spacing as recommended by manufacturer.

B. Install full width panels with cut pieces only at top of wall (no "belly bands").

C. Place wrapped edges adjacent to one another; do not place cut edges or butt ends adjacent to wrapped edges.

D. Maintain 1/4-inch maximum gap between bottom of gypsum board and floor.

E. Single-Layer Installation: Install gypsum board, with edges and ends occurring over firm bearing.

F. Fire-Rated Assemblies Installation: Adhere to the installation requirements of the fire-rated assemblies referenced on the Drawings.

G. Run gypsum board full depth behind steel door frames.

H. Dust and Debris: Remove GWB dust and debris from concealed spaces and from interior spaces inside of walls, shafts and ceiling assemblies prior to covering.

3.05 INSTALLATION – TRIM AND ACCESSORIES

A. Corner Beads: Install at external corners in a single full length piece free of butt joints, using longest practical lengths, no short pieces; place into a solid bed of soft joint compound for secure installation.

1. Align bead straight and plumb.

2. Align juncture with other corner bead flush.

B. J-Shaped Edge Trim: Install at any exposed to view location where gypsum board abuts any dissimilar material or ends with exposed edge (around window frames, exposed structure, etc.).

1. Install heavy cardboard continuous at window perimeter to protect frame from dirt and damage.

C. Control Joints: Place control joints consistent with lines of building spaces and as follows:

1. As determined by installer to avoid cracking in finished surfaces, generally not more than 30 feet apart on walls and ceilings over 50 feet long. Location and layout subject to Architect's approval; review with Architect prior to starting installation.

3.06 GYPSUM BOARD LEVEL OF FINISH

A. Finish gypsum board (whether exposed to view or not) in accordance with GA-214 to the following minimum level of finish:

1. Painted Finish Exposed to View: Level 5 Smooth, substitute a coat of Primer / Surfacer (15 – 20 wet mil thickness) in lieu of skim coating with joint compound; sand surface of Primer / Surfacer smooth.

2. Surfaces in Mechanical, Electrical, and Storage Rooms: Level 4.

3. Surfaces Concealed from View with Thick Adhered Surface Finish (sheet vinyl or rubber base, plastic sheet wainscots, stainless steel wall panels etc.): Level 3, no texture.

4. Water Resistant Panels: Level 5 Smooth, substitute a coat of Primer / Surfacer (15 – 20 wet mil thickness) in lieu of skim coating with joint compound; sand surface of Primer / Surfacer smooth.

B. Tape, fill and sand exposed joints, edges and corners to produce smooth surface ready to receive finishes.

1. Feather coats of joint compound so that camber is maximum 1/32-inch.

3.07 INSPECTION WITH PAINTER AND PROJECT SUPERINTENDENT

A. After taping and finishing is completed, coordinate an inspection walkthrough of all finished GWB surfaces with the painter and project superintendent using a 500 watt lamp aimed from side; mark any defects in the surface finish.

1. Repair defective areas not conforming to specified level of finish and seal repaired areas.

2. Do not proceed with application of Primer / Surfacer until defective, nonconforming areas have been refinished correctly.

3.08 APPLICATION – PRIMER / SURFACER

A. Apply Primer / Surfacer to surfaces exposed to view in accordance with manufacturer's installation instructions and at recommended application rate to achieve GA-214 Level 5 Smooth appearance, free of visible tape joint lines after finish painting is completed.

1. Spray-apply Primer / Surfacer to 15 - 20 mil wet film thickness applied in two separate passes at 90 degrees to each other for proper coverage.

2. Sand surface of Primer / Surfacer lightly after it has dried to eliminate any unwanted stipple pattern or texture.

B. After application of Primer / Surfacer, carefully inspect walls with 500 watt lamp aimed from side and mark any defects in surface finish.

1. Fill / sand defective areas in surface finish and recoat with primer / surfacer.

3.09 TOLERANCES

A. Gap between Bottom of GWB and Floor: 1/4-inch maximum.

B. Maximum Variation of Finished Gypsum Board Surface from True Flatness: 1/8-inch in 10 feet in any direction.

C. Butt Joint Finishing: Not readily visible under the normal lighting conditions found for any given area / surface.

D. Finishing Tolerances: All exposed surfaces shall be smooth and free from visible ridges, waves, ripples, holes, defects, delamination, roughness, depressions, screw pops, etc. Taped joints shall not be visible after finish paint application.

3.10 CLEAN UP

A. Remove excess gypsum board and finishing materials from the site.

B. Remove gypsum board scraps and dust from all concealed spaces including interior spaces of wall framing.

C. Remove gypsum dust, taping mud and primer / surfacer completely from window frames, door frames, subfloor surfaces and any surface / material exposed to view.

1. Subfloor cleanliness / condition shall conform to floor covering installation requirements.

3.11 WORKMANSHIP

A. Gypsum wallboard shall be installed and finished using the best workmanship, including the following:

1. No damaged board or paper face.

2. Ends centered on framing.

3. GWB tucked full depth behind hollow metal door frames.

4. Gap at bottom of GWB 1/4-inch or less.

5. Cut-outs for outlets and devices cut neatly with saw or router.

6. GWB fastened tight to face of studs to eliminate screw pops.

7. All screws that do not engage framing removed.

8. Taped joints full bedded in taping compound and free of air pockets.

9. Butt joints finished with minimal thickness and tapered out for flat appearance.

10. Taped joints smooth and flat so as to disappear after painting.

11. Paper face not roughened by sanding.

12. Bottom of GWB behind rubber base, coved base, and wood base properly finish smooth and free of roughness.

B. Gypsum wallboard installed and finished with improper or poor workmanship shall be removed and replaced at Contractor's expense.

3.12 FIELD QUALITY CONTROL

A. Contractor Quality Control: Employ / assign quality control personnel to monitor the work of this section for conformance to the requirements of the Contract Documents and to good construction practices.

1. Contractor is solely responsible for managing and controlling the quality of the work and conformance with the requirements of the Contract Documents..

2. Fire-Rated Assemblies: Contractor is responsible to verify that the installation and materials conform to the requirements of the fire-rated assemblies referenced on the Drawings.

B. Schedule of Required Inspections by Contractor; confirm installation and workmanship are as shown / specified:

1. Inspect framing for conformance to specified surface tolerances.

2. Confirm that batt insulation and sound insulation are installed in the proper locations and conform to specification requirements.

3. Inspect GWB installation.

4. Inspect trim installation.

5. Inspect taping and finish application.

6. Inspect finish on bottom of walls with rubber base and coved base.

7. Inspect finished GWB surfaces after sealer is applied with painter and GWB finish applicator to identify any finishing defects requiring correction prior to finish application and painting.

END OF SECTION

SECTION 09 3000

TILE

PART 1 GENERAL

1.01 RELATED DOCUMENTS

A. Drawings and general provisions of the Contract, including General Conditions, Supplementary Conditions and Divisions 00 and 01 Specification Sections, apply to work of this section.

1.02 SECTION INCLUDES

A. Ceramic and Porcelain Tile Work.

1.03 REFERENCES

A. References shall be the edition current as of the date of the Contract Documents.

B. ANSI A108.1a - American National Standard Specifications for Installation of Ceramic Tile in the Wet-Set Method, with Portland Cement Mortar.

C. ANSI A108.10 - American National Standard Specifications for Installation of Grout in Tilework.

D. ANSI A137.1 - American National Standard Specifications for Ceramic Tile.

E. TCNA (HB) - Handbook for Ceramic, Glass, and Stone Tile Installation.

1.04 SUBMITTALS

A. Refer to Section 01 3300 for submittal procedures.

B. Product Data: Submit manufacturer's product data for each different material specified.

C. Samples: Submit two (2) samples of each different tile specified and one (1) sample of each different grout specified.

D. Warranty: Provide evidence that the manufacturer of the tile setting / installation materials subject to the ten (10) year warranty has been notified of the project and submit sample warranty.

E. Certificate: Upon completion of the work, provide written certification that the tile installation has been installed in conformance with the tile setting / installation systems manufacturer's installation instructions and with the applicable Tile Council of America Installation Methods.

1.05 QUALITY ASSURANCE

A. Conform to ANSI A137.1.

B. Conform to TCNA (HB) Handbook for Ceramic Tile Installation.

C. Conform to manufacturer's installation instruction.

1.06 QUALIFICATIONS

A. Manufacturer Qualifications: Company specializing in the manufacture of products specified in this section with a minimum of ten (10) years of documented experience.

B. Installer Qualifications: Company specializing in applying the work of this section with a minimum of five (5) years of documented experience and approved by product manufacturer.

1.07 DELIVERY, STORAGE AND HANDLING

A. Deliver, store and protect products as recommended by the manufacturer.

1.08 ENVIRONMENTAL REQUIREMENTS

A. Maintain 50 degrees F. minimum during installation of mortar materials.

1.09 GUARANTEE / WARRANTY

A. Two (2) Year Contractor’s Guarantee: The Contractor shall guarantee the tile installation for a period of two (2) years against defects in installed materials and workmanship, deterioration and leaks including a two (2) year watertight guarantee on waterproof membrane installation. Correct any tile work that is defective, improperly installed or leaking for a period of two (2) years at no cost to the Owner.

B. Ten (10) Year Manufacturer’s Warranty: Provide tile installation systems manufacturer’s standard ten (10) year guarantee that the tile installation systems will be free from manufacturing defects and will not break down or deteriorate under normal usage for period of ten (10) years.

PART 2 PRODUCTS

2.01 ACCESSORIES

A. Provide fillers, admixtures, and adhesives as required to suit conditions for complete installation.

PART 3 EXECUTION

3.01 COORDINATION

A. Review, coordinate and accommodate work of other trades that interface with, affect or are affected by the work of this section so as to facilitate the execution of the overall Work of this project in a coordinated and efficient manner.

B. Coordinate installation to follow dry out of building and completion of GWB.

3.02 EXAMINATION

A. Inspect substrate surfaces and site conditions and verify that they conform to manufacturer's requirements and are acceptable to receive work.

B. Identify any unacceptable cracks requiring filling or repair.

C. Measure spaces / rooms for square and parallel walls.

D. Confirm that substrates are not contaminated with any material / substance that would impair the adhesion of the tile to the substrate.

E. Do not proceed with installation until substrate surfaces and site conditions conform to all requirements.

F. Beginning of installation indicates installer accepts substrate surfaces and site conditions as conforming to all requirements.

3.03 PREPARATION

A. Prepare substrate surfaces and conditions for application as required by manufacturer of thin-set bond coat and waterproofing membrane.

B. Thoroughly remove any substances on substrate surfaces that would negatively affect the installation or bond strength of the waterproofing membrane or tile.

C. Protect surrounding work from damage or disfiguration.

3.04 TILE LAYOUT AND CUTTING

A. Tile Layout:

1. General: Avoid narrow cuts, small pieces or rows that taper in width; consult with Architect to determine best resolution before proceeding with cutting and installation.

B. Cut tile to fit the spaces / rooms and configuration shown.

1. Cuts shall be accurate and align from tile to tile in a uniform line.

2. Cuts shall allow for joint width matching width of field tile.

C. Cut and fit tile to penetrations through tile, form corners and bases neatly.

3.05 TILE PATTERNS

A. Refer to Drawings for pattern types and / or blends.

3.06 INSTALLATION – GENERAL

A. Install tile and grout in accordance with applicable requirements of ANSI A108.1a through ANSI A108.10, manufacturer's instructions, and TCNA (HB) Handbook recommendations.

B. Lay tile to pattern indicated. Do not interrupt tile pattern through openings.

C. Place tile joints uniform in width, subject to variance in tolerance allowed in tile size. Make joints watertight, without voids, cracks, excess mortar, or excess grout.

D. Set tile firmly in place fully bonded to setting bed and with top surface flush with adjacent tile; align tile square and with straight parallel grout lines of uniform width.

1. Lippage of tile edges is not acceptable.

E. Joint Patterns: Lay out tile according to patterns indicated on Drawings, or if not shown, in a grid pattern with floor joints aligning with wall and trim joints. Install joints straight and of uniform width.

F. Mortar shall be applied with notched trowel using scraping motion to work the material into good contact with the surface to be covered.

1. Trowel notches shall conform to size / spacing recommended by thinset mortar manufacturer.

G. Only as much mortar shall be applied as can be covered within 20 to 30 minutes, or is still tacky. Tile shall be aligned to show uniform joints and then allowed to set firm.

H. Back-butter large tile with mortar to assure full coverage and bond over entire tile surface.

I. Install tile under or behind equipment or fixtures.

J. Sound tile after setting. Replace hollow sounding units.

K. Keep control joints free of mortar or grout. Apply sealant to joints.

L. Allow tile to set for a minimum of 48 hours prior to grouting.

M. Grout tile joints working grout completely into full depth of joints.

N. Clean excess grout from exposed tile surfaces.

O. Include sealant-filled joint at floor perimeters and wall inside corners and where system abuts different material and substrates.

1. Sealant color shall match grout.

2. Provide backer rod or bond breaker tape compatible with sealant.

3. Install backer rod or bond breaker and sealant in accordance with manufacturer's installation instructions.

P. Apply sealant-filled joints at junction of tile and dissimilar materials, at junction of dissimilar planes and wherever else required to prevent cracks. Match grout color.

3.07 INSTALLATION SCHEDULE

A. General: All tile work shall be performed in conformance with installation methods outlined in the Tile Council of North America (TCNA (HB)) Handbook For Ceramic Tile Installation as follows:

B. Expansion Joints (Vertical and Horizontal): Install sealant filled joints per TCNA (HB) Installation Method EJ171 at perimeter of floors and inside corners of walls, and where shown on Drawings; match sealant color to grout color.

3.08 CLEANING

A. Clean tile surfaces; remove grout haze and dirt.

3.09 PROTECTION

A. Protect finished installation from damage.

3.10 WORKMANSHIP

A. Tile shall be installed and finished using the best workmanship, including the following:

1. No cut tile "slivers" less than one-half standard tile width.

2. Tile edges aligned flush and free of lippage.

3. All tile fully bonded / adhered to substrate.

4. Straight grout lines with uniform width.

5. Grout full to top edge of tile and not recessed down in joint.

6. No voids or open pockets in grout joints.

7. Grout haze completely removed from tile surfaces.

B. Tile installed with improper or poor workmanship shall be removed and replaced at Contractor's expense.

3.11 FIELD QUALITY CONTROL

A. Contractor Quality Control: Employ / assign quality control personnel to monitor the work of this section for conformance to the requirements of the Contract Documents and to good construction practices.

1. Contractor is solely responsible for managing and controlling the quality of the work and conformance with the requirements of the Contract Documents.

END OF SECTION

SECTION 09 6100

CONCRETE FLOOR SEALING

PART 1 GENERAL

1.01 RELATED DOCUMENTS

A. Drawings and general provisions of the Contract, including General Conditions, Supplementary Conditions and Divisions 00 and 01 Specification Sections, apply to work of this section.

1.02 SECTION INCLUDES

A. Concrete Floor Cleaning.

B. Concrete Floor Sealer.

1.03 SCOPE OF WORK

A. Scope of Work: Clean and seal the concrete floors that are scheduled to be left exposed to view without any floor covering.

1. Cleaning: Clean the concrete floors to remove dirt, oil, grease, stains, sealers, paint, etc. using a self-contained power floor scrubbing machine and localized hand cleaning methods and products to clean difficult areas.

2. Sealing: Apply a concrete hardener, sealer, densifier and a concrete floor sealer to concrete floors to provide a consistent sheen and appearance.

1.04 PERFORMANCE REQUIREMENTS

A. Performance Requirements: Provide concrete floor sealer system that provides the following:

1. Waterproof Properties: Rilem Test Method 11.4, 70% or greater reduction in absorption when compared against untreated concrete.

2. High Traction Rating: 0.6 rating or above when tested in accordance with ANSI/NFSI B101.1.

1.05 REFERENCES

A. References shall be the edition current as of the date of the Contract Documents.

B. ANSI/NFSI B101.1 - Test Method for Measuring the Wet SCOF of Hard-Surface Walkways.

C. Rilem Test Method 11.4 - Standard Measurement of Reduction of Moisture Penetration Through Horizontal Concrete Surfaces.

1.06 SUBMITTALS

A. Refer to Section 01 3300 for submittal procedures.

B. Product Data: Submit manufacturer's product data sheets for specified products.

C. Operation and Maintenance Data: Submit operation and maintenance data for installed products; include the following:

1. Manufacturer's instructions on maintenance renewal of applied treatments.

1.07 DELIVERY, STORAGE AND HANDLING

A. Deliver materials in manufacturer's original packaging with identification labels and seals intact.

B. Store materials protected from exposure to harmful weather conditions and at temperature conditions recommended by manufacturer.

1.08 PROTECTION OF CONCRETE SLAB

A. Protect from petroleum stains during construction.

B. Restrict use of pipe cutting machinery.

C. Restrict placement of steel, wood or sawdust directly on slab.

D. Restrict use of acids or acidic detergents on slab.

E. Restrict placement of anything on the slab that could stain or discolor it.

1.09 PROJECT AMBIENT CONDITIONS

A. Comply with manufacturer's written recommendations.

1.10 EXTRA MATERIALS

A. Provide a five (5) gallon container of cleaning solution for Owner's use in maintaining the floors.

PART 2 PRODUCTS

2.01 CONCRETE FLOOR CLEANING PRODUCTS / EQUIPMENT

A. Cleaning Agents: Industrial strength floor cleaning agents suitable for removing dirt, oils / grease, stains, sealers, etc. from the existing and new concrete floors without damaging concrete and approved by the floor sealing system manufacturer.

1. Manufacturer / Product: Laticrete, L&M *Citrex* is the basis of design and the standard of quality, function and performance required for this project.

   a. Laticrete; *L&M Citrex* (specified, basis of design).

   b. Products by other manufacturers may be acceptable, subject to their ability to meet or exceed this standard and provide products conforming with the requirements of the Drawings and this Specification.

   c. Substitutions: Refer to Section 01 6000 for substitution procedures and requirements. Proposed substitutions must match specified product performance.

B. Cleaning Equipment: Provide cleaning equipment and products as required to thoroughly clean concrete floors, including the following:

   1. Walk Behind Self-Contained Scrubber Machine: Self-contained, self-powered industrial floor scrubbing machine, similar to the Tennant T5 Walk Behind Scrubber that lays down water and cleaning agent, scrubs floor surface with heavy duty rotating brushes and removes dirty water from the floor in one continuous operation, with separate tanks for clean water / cleaning solution and waste water.

   2. Hand Cleaning Equipment: Scrub brushes, hand scrapers, buckets and wet vacuum as required to clean difficult areas, vertical concrete risers, corners and floor perimeters and small areas where scrubber machine will not fit.

2.02 CONCRETE FLOOR SEALING SYSTEM

A. Manufacturer / Product: Products by Laticrete are the basis of design and the standard of quality, function, performance and appearance required for this project.

   1. Laticrete (specified, basis of design).

   2. Products by other manufacturers may be acceptable, subject to their ability to meet or exceed this standard and provide products conforming with the requirements of the Drawings and this Specification.

   3. Substitutions: Refer to Section 01 6000 for substitution procedures and requirements. Proposed substitutions must match specified product performance and appearance.

B. Hardener, Sealer, Densifier: Proprietary, water based, odorless liquid, VOC compliant, environmentally safe chemical hardening solution leaving no surface film.

   1. Hardener, Sealer, Densifier Product: *L&M FGS Hardener Plus.*

C. Finish Sealer Product: *L&M FGS PermaGuard SPS.*

D. Cleaning Solution for Concrete Sealed with Specified Finish Sealer: Proprietary, mild, highly concentrated liquid concrete cleaner and conditioner containing wetting and emulsifying agents; biodegradable, environmentally safe and certified High Traction by National Floor Safety Institute (NFSI).

1. Cleaning Product: *L&M FGS Concrete Conditioner.*

PART 3 EXECUTION

3.01 COORDINATION

A. Review, coordinate and accommodate work of other trades that interface with, affect or are affected by the work of this section so as to facilitate the execution of the overall Work of this project in a coordinated and efficient manner.

3.02 CLEANING CONCRETE FLOORS

A. Clean concrete floors using cleaning agents and equipment as required to leave floors completely clean and free of dirt, stains, oil / grease, paint and any other foreign substances.

1. Thoroughly remove cleaning agents used to clean floor by water rinsing and running self-contained floor scrubber over floor several times using only clean water.

3.03 INSTALLATION – CONCRETE FLOOR SEALING SYSTEM

A. Hardener, Sealer, Densifier Application: Apply to clean and dry concrete surfaces in accordance with manufacturer application instructions:

1. Apply first coat at rate of 250 square feet per gallon.

2. Apply second coat at rate of 350 square feet per gallon.

3. Follow manufacturer's recommendations for drying time between successive coats.

B. Finish Sealer Application:

1. New concrete must be at least 28 days old before applying finish sealer.

2. Wait at least 48 hours after application of hardener, sealer, densifier to install finish sealers.

3. Apply finish sealer to clean and dry concrete floors at rate recommended by manufacturer and in accordance with manufacturer's installation instructions.

4. Burnish the sealed floor after finish sealer has dried a minimum of 4 hours using a high speed 2,000 RPM burnisher in accordance with sealer manufacturer's instructions.

3.04 FINAL CLEANING

A. Mechanically scrub treated floors with soft to medium pads using specified cleaning solution.

3.05 PROTECTION

A. Protect completed floors from construction traffic and damage until building is turned over to the Owner.

3.06 WORKMANSHIP

A. Concrete floors shall be cleaned and sealed using the best workmanship, including the following:

1. Use of proper equipment in good working order.

2. Consistent sheen on floors.

3. Areas of floor clean and free of dirt and stains.

4. Edges and perimeters of floors cleaned and sealed to match the field.

5. Hardener, sealer, densifier, and finish sealers applied a rates recommended by manufacturer.

6. Proper protection of finished floor from construction damage or stains.

B. Any part of the sealed concrete floor installed with improper or poor workmanship shall be redone at Contractor's expense.

3.07 FIELD QUALITY CONTROL

A. Contractor Quality Control: Employ / assign quality control personnel to monitor the work of this section for conformance to the requirements of the Contract Documents and to good construction practices.

1. Contractor is solely responsible for managing and controlling the quality of the work and conformance with the requirements of the Contract Documents.

END OF SECTION

SECTION 09 6500

RESILIENT FLOORING

PART 1 GENERAL

1.01 RELATED DOCUMENTS

A. Drawings and general provisions of the Contract, including General Conditions, Supplementary Conditions and Divisions 00 and 01 Specification Sections, apply to work of this section.

1.02 SECTION INCLUDES

1.03 SUBMITTALS

A. Refer to Section 01 3300 for submittal procedures.

B. Product Data: Submit manufacturer's product data sheet for each of the following:

1. Adhesives for each different flooring product and accessory.

2. Cleaning Products.

1.04 DELIVERY, STORAGE AND PROTECTION

A. Protect materials from damage. Store materials in accordance with manufacturer's instructions.

1.05 ENVIRONMENTAL REQUIREMENTS

A. Maintain temperature in storage area between 55 degrees F and 90 degrees F.

B. Maintain building temperature at 65 degrees F for 2 weeks minimum prior to installation.

C. Store materials for not less than 48 hours prior to installation in area of installation at a temperature above 65 degrees F to achieve temperature stability. After flooring has been installed, maintain conditions above 65 degrees F.

PART 2 PRODUCTS

PART 3 EXECUTION

3.01 COORDINATION

A. Review, coordinate and accommodate work of other trades that interface with, affect or are affected by the work of this section so as to facilitate the execution of the overall Work of this project in a coordinated and efficient manner.

B. Schedule flooring and base installation to follow drying of concrete floor slab and completion of interior painting.

3.02 EXAMINATION

A. Report conditions contrary to contract requirements that would prevent a proper installation. Do not start installation until substrate / sub-floor meets requirements of material and adhesive manufacturers.

B. Start of installation indicates acceptance of substrate / sub-floor and conditions as conforming to requirements. Failure to call attention to defects or imperfections will be construed as acceptance and approval of the sub-floor.

3.03 PROTECTION OF FINISHED WORK

A. Protect flooring and base from any stains, marring or damage resulting from construction operations.

3.04 CLEANING

A. Remove excess adhesive from floor, base, and wall surfaces without damage.

3.05 FIELD QUALITY CONTROL

A. Contractor Quality Control: Employ / assign quality control personnel to monitor the work of this section for conformance to the requirements of the Contract Documents and to good construction practices.

1. Contractor is solely responsible for managing and controlling the quality of the work and conformance with the requirements of the Contract Documents.

END OF SECTION

SECTION 09 7733

PLASTIC SHEET WAINSCOTS

PART 1 GENERAL

1.01 RELATED DOCUMENTS

A. Drawings and general provisions of the Contract, including General Conditions, Supplementary Conditions and Divisions 00 and 01 Specification Sections, apply to work of this section.

1.02 SECTION INCLUDES

A. Fiberglass Reinforced Plastic Panels (FRP).

1.03 REFERENCES

A. References shall be the edition current as of the date of the Contract Documents.

B. ASTM D3841 - Standard Specification for Glass-Fiber-Reinforced Polyester Plastic Panels.

C. ASTM E84 - Standard Test Method for Surface Burning Characteristics of Building Materials.

1.04 SUBMITTALS

A. Refer to Section 01 3300 for submittal procedures.

B. Product Data: Provide manufacturer's standard details and catalog data demonstrating compliance with referenced standards.

1.05 QUALITY ASSURANCE

A. Fabricator / Installer Qualifications: Company regularly engaged in fabricating and installing plastic sheet wainscots of the type and complexity specified in this section, and that employ skilled workers who custom fabricate products similar to those required for this project and whose products have a record of successful in-service performance.

1.06 DELIVERY, STORAGE AND HANDLING

A. Store products indoors and protect from moisture, construction traffic, and damage.

B. Store panels flat on clean, dry surface. Do not stand on edge or stack on fresh concrete or other surfaces that emit moisture.

C. Store panels for at least 72 hours at temperature and humidity conditions approximating the average environment of the finished room.

1.07 PROJECT CONDITIONS

A. Temperature: Maintain temperature between 65 degrees F and 90 degrees F at areas of installation for at least 72 hours before and 72 hours after application of materials.

B. Lighting: Install materials only after permanent lighting system is installed and operable in areas of installation.

C. Ventilation: Where toxic materials and flammable or explosive solvents and adhesives are used, maintain appropriate precautions and provide adequate and continuous ventilation during installation and until volatile substances have dispersed.

PART 2 PRODUCTS

2.01 FIBERGLASS REINFORCED PLASTIC PANELS (FRP)

A. Manufacturers / Products: Subject to their ability to conform to the requirements of the Drawings and this Specification, the following manufacturers may provide products:

1. Crane Composites (Kemlite and Sequentia).

2. Marlite.

3. Nudo.

4. Panolam.

5. Substitutions: Refer to Section 01 6000 for substitution procedures and requirements.

B. General:

1. Composite plastic panels of random chopped fiberglass roving, modified polyester copolymer, inorganic fillers, and pigments, comply with ASTM D3841.

2. Resistant to rot, corrosion, staining, denting, peeling, and splintering.

3. USDA accepted.

C. Minimum Surface Burning Classification: Class C.

1. Flame Spread (ASTM E84): 25 or less.

2. Smoke Developed (ASTM E84): 450 or less.

D. Size: 48-inch width, heights as indicated on the Drawings.

1. Thickness: 0.09-inch.

E. Colors: _____.

F. Textures: _____.

G. Accessories:

1. Moldings / Trims: Provide panel manufacturer's standard extruded plastic moldings / trims to meet project conditions.

2. Adhesive: Structural construction adhesive as recommended by manufacturer for good adhesion to substrate material.

3. Sealant: Clear silicone sealant as recommended by manufacturer.

PART 3 EXECUTION

3.01 COORDINATION

A. Review, coordinate and accommodate work of other trades that interface with, affect or are affected by the work of this section so as to facilitate the execution of the overall Work of this project in a coordinated and efficient manner.

3.02 EXAMINATION

A. Examine substrates that will receive panels to ensure that surfaces are smooth, dry, true, and free of dirt, dust, oil, or grease.

B. Remove high spots. Fill low spots.

C. Verify that substrate construction is completed and approved.

D. Correct deficiencies in substrate before installing panels.

E. Beginning of installation indicates acceptance of substrate and conditions.

3.03 INSTALLATION - FIBERGLASS REINFORCED PLASTIC PANEL WAINSCOT (FRP)

A. Separate out and allow fiberglass reinforced plastic panels to acclimate in temperature controlled building for 72 hours minimum or as recommended by manufacturer prior to cutting or installation.

B. Install panels / wainscots and trim in accordance with manufacturer's printed installation instructions, using manufacturer’s recommended adhesive.

C. Lay out panels for minimum number of joints and equal width cuts at ends of walls (or as directed by Architect).

D. Install panels full length without horizontal joints.

E. Install trim at edges and changes of wall plane.

F. Cut openings for utility penetrations tight and seal gap with silicone sealant.

G. Sealants: Seal corner seams, ceiling and base junctures, around door frames and other openings, and between penetrating items and panel cut-outs.

1. At trim, set panels into continuous bead of fresh sealant so that sealant oozes out of joint after panel is fully inserted into channel, remove excess sealant and leave joint crack-free.

3.04 CLEANING

A. Carefully replace electrical cover plates and other fixtures temporarily removed in preparation for wall panel installation.

B. Correct any areas where wall panel gaps occur to the satisfaction of the Architect.

C. Clean areas where wall panel installation has occurred of all resulting debris. Remove scraps, excess material, traces of adhesive, and other trash, leaving the premises in neat and clean condition.

3.05 FIELD QUALITY CONTROL

A. Contractor Quality Control: Employ / assign quality control personnel to monitor the work of this section for conformance to the requirements of the Contract Documents and to good construction practices.

1. Contractor is solely responsible for managing and controlling the quality of the work and conformance with the requirements of the Contract Documents.

END OF SECTION

SECTION 09 9000

PAINTS AND COATINGS

PART 1 GENERAL

1.01 RELATED DOCUMENTS

A. Drawings and general provisions of the Contract, including General Conditions, Supplementary Conditions and Divisions 00 and 01 Specification Sections, apply to work of this section.

1.02 SECTION INCLUDES

A. Surface Preparation.

B. Gypsum Wall Board (GWB) Inspection.

C. Field Applied Paints and Coatings.

D. Masonry Water Repellent Coatings.

E. Masonry Anti-Graffiti Coatings.

F. Fire / Smoke Partition Marking and Identification.

1.03 REFERENCES

A. References shall be the edition current as of the date of the Contract Documents.

B. MPI (APL) - Master Painters Institute Approved Products List; Master Painters and Decorators Association.

C. MPI (APSM) - Master Painters Institute Architectural Painting Specification Manual.

D. SSPC V2 (PM2) - Systems and Specifications: Steel Structures Painting Manual Volume 2.

E. SSPC-SP 1 - Solvent Cleaning.

1.04 SUBMITTALS

A. Refer to Section 01 3300 for submittal procedures.

B. Paint Schedule:

1. Provide schedule of proposed paint products for the items to be painted in format matching the Schedule found in Part 3 of this section.

2. Provide product data for each paint and coating material included in the submittal. **Do not include MSDS sheets for each product.**

3. Submittals that do not include a Paint Schedule matching the specified format will be returned without review and will be marked as “Revise and Resubmit.”

C. Shop Drawing: Provide drawing showing plan and layout of marking and identification for Fire and Smoke Barrier partitions shown on the Drawings.

D. Paint Draw Down Samples: Submit two (2) painted samples, illustrating selected colors for each color and system selected. Submit on heavy paper card stock, 8-inch x 10-inch in size.

1. Sheen Samples: Submit samples of different sheens for each color as directed by Architect for selection.

1.05 QUALITY ASSURANCE

A. Single Source Responsibility: Paint products used for painting a given material / surface shall be manufactured by the same company unless noted differently in Part 3 of this section.

B. Applicator Qualifications: Company specializing in performing the work of this section with a minimum of five (5) years of successful experience.

1.06 REGULATORY REQUIREMENTS

A. Conform to applicable code for flame and smoke rating requirements for products and finishes.

1.07 DELIVERY, STORAGE AND PROTECTION

A. Deliver products to site in sealed and labeled containers; inspect to verify acceptability.

B. Container Label: Include manufacturer's name, type of paint, brand name, lot number, brand code, coverage, surface preparation, drying time, cleanup requirements, color designation, and instructions for mixing and reducing.

C. Paint Materials: Store at minimum ambient temperature of 45 degrees F and a maximum of 90 degrees F, in ventilated area, and or as required by manufacturer's instructions and / or MPI (APSM) MANUAL.

1.08 ENVIRONMENTAL REQUIREMENTS

A. Environmental Requirements: Conform to MPI (APSM), product manufacturer and the following requirements; where conflicts exist, the manufacturer’s requirements shall govern:

1. Unless specifically pre-approved by the applied product manufacturer in writing, perform no painting work when the ambient air and substrate temperatures are below 50° F for both interior and exterior work.

2. Perform no exterior painting work unless environmental conditions conform to MPI (APSM) and paint manufacturer's requirements or adequate weather protection and temporary heat is provided. Suitable weatherproof covering and sufficient heating facilities shall be in place to maintain minimum ambient air and substrate temperatures for 24 hours before, during and after paint application.

3. Perform no interior painting work unless adequate continuous ventilation and sufficient heating facilities are in place to maintain ambient air and substrate temperatures above minimum requirements for 24 hours before, during and after paint application.

4. Perform no painting work when the relative humidity is above 85% or when the dew point temperature is less than 5° F variance between the air / surface temperature.

5. Perform no painting or coating work when the maximum moisture content of the substrate exceeds:

   a. 15% for wood.

   b. 12% for gypsum board.

   c. Masonry: As required by manufacturer.

6. Masonry shall be installed at least 28 days prior to coating work and must be dry on both sides with moisture content and alkalinity at levels required by product manufacturer.

7. Apply paint only to dry, clean, properly cured and adequately prepared surfaces in areas where dust is no longer generated by construction activities such that airborne particles will not affect the quality of finished surfaces.

8. Perform no painting or decorating work unless a minimum lighting level of 50 foot candles is provided on surfaces to be painted.

1.09 EXTRA MATERIALS

A. Supply five (5) gallon container of paint for primary interior and exterior wall colors. Supply one (1) gallon of other colors and types of paint used on project; store where directed. Containers to be new and unopened.

B. Mark top and side of each container clearly with Architect's color designation in addition to the manufacturer's label.

1.10 WARRANTY

A. Contractor Guarantee: Upon completion of the work required by this section, the Contractor guarantees the application of the paints and coatings to be free from improper installation or workmanship for a period of two (2) years. Contractor agrees to correct any failed coating promptly after notification by Owner and at no cost to the Owner.

B. Manufacturer Warranty – Masonry Clear Water Repellent: Manufacturer shall warrant the clear water repellent product for a period of ten (10) years against loss of water repellency of 1.0 ml or greater / 20 minutes. Manufacturer shall correct deficiencies promptly and without inconvenience or cost to the Owner.

C. Manufacturer Warranty – Masonry Anti-Graffiti Coating: Manufacturer shall warrant the anti-graffiti coating system for a period of five (5) years against defects related to workmanship or material deficiency. Manufacturer shall correct deficiencies promptly and without inconvenience or cost to the Owner.

D. Contractor shall coordinate pre-approval of the materials to receive water repellent and anti-graffiti coating with manufacturer prior to application in accordance with manufacturer's warranty provisions.

PART 2 PRODUCTS

2.01 PAINTS AND COATINGS - GENERAL

A. Paint and Coating Manufacturers and Products by MPI (APL) Number: Provide manufacturers and products listed on MPI (APL) Approved Products List:

1. Website: www.specifypaint.com/APL/paintinfo_APL_new/manuf.asp

B. Paint and Coating Manufacturers and Products by Proprietary Products: Provide the products from the specified manufacturers.

1. Substitutions: Refer to Section 01 6000 for substitution procedures and requirements.

C. Paints and Coatings: Ready mixed, select products from the MPI Manual Manufacturer's Product List for Manufacturers listed above which installer has used on other projects and are known to provide excellent performance including:

1. A soft paste consistency, capable of being readily and uniformly dispersed to a homogeneous coating.

2. Good hiding characteristics.

3. Good flow and brushing properties.

4. Good mildew-resistance.

5. Capable of drying or curing free of streaks or sags.

D. Certain manufacturer's products may not provide adequate hiding ability with the number of coats specified. Contractor may be required to provide additional coats at no additional cost if products are selected that do not provide adequate hiding ability.

2.02 ACCESSORY MATERIALS

A. Accessory Materials: Linseed oil, shellac, turpentine, paint thinners and other materials not specifically indicated but required to achieve the finishes specified; commercial quality.

B. Patching Material: Latex-based filler.

C. Sealant: Silicon-latex acrylic sealant as specified in Section 07 9000.

PART 3 EXECUTION

3.01 COORDINATION

A. Review, coordinate and accommodate work of other trades that interface with, affect or are affected by the work of this section so as to facilitate the execution of the overall Work of this project in a coordinated and efficient manner.

B. Coordinate selection of paint products to be applied over prime coats applied by others for compatibility and good adhesion.

C. Coordinate inspection of finish GWB surfaces with Section 09 2900 prior to start of any painting work; identify and mark any defective areas for correction.

D. Schedule work to follow completion of dust / dirt producing work.

3.02 GWB FINISH INSPECTION

A. Prior to applying paint to GWB surfaces, inspect finished GWB surfaces with Section 09 2900 installer and Project Superintendent using a 500 watt lamp aimed from side; mark any defects in the surface finish for correction by Section 09 2900.

3.03 EXAMINATION

A. Verify that surfaces are clean and ready to receive paint as required by the product manufacturer.

B. Examine surfaces scheduled to be finished prior to commencement of work. Report any condition that may potentially affect proper application or performance.

C. Measure moisture content and pH level of surfaces. Do not apply finishes unless moisture content and pH level of surfaces conforms to the recommendations of the MPI (APSM) Manual and paint manufacturer.

D. Do not start paint application until problems with substrate surfaces, GWB finish, and shop-applied primer / paint have been satisfactorily resolved.

E. Start of installation indicates acceptance of substrate, finish and conditions and responsibility for proper finish, performance and appearance.

3.04 SURFACE PREPARATION

A. Conform to MPI (APSM) Manual surface preparation recommendations, paint manufacturer's recommendations and the following for preparation of each different surface scheduled to be painted:

B. Substrate: Clean substrate surfaces thoroughly before applying any primer or paint following paint manufacturer's cleaning recommendations; allow substrate to dry thoroughly before starting paint application.

C. Surface Appurtenances: Remove electrical plates, hardware, light fixture trim, escutcheons, and fittings prior to preparing surfaces or finishing.

D. Marks: Seal with shellac those which may bleed through surface finishes.

E. Mildew: Remove mildew by scrubbing with solution of tetra-sodium phosphate and bleach. Rinse with clean water and allow surface to dry.

F. Exterior Galvanized Steel: Prepare surfaces to be painted in strict conformance with paint manufacturer's surface preparation requirements.

1. Minimum Preparation: SSPC-SP 1 Solvent Cleaning of surfaces in strict conformance with SSPC V2 (PM2) Steel Structures Painting Manual requirements. Acid etch surface as specifically recommended by the paint manufacturer.

2. Application of primer shall follow surface preparation immediately within the same day or surfaces will require repeating the preparation procedure.

3. Surface preparation and prime painting shall be scheduled to coincide with warm, dry weather, minimum 60 degrees F and rising.

G. Glue-Laminate Wood Beams Exposed To View: Remove dirt and stains from wood surfaces to provide a fresh cut, pristine wood surface appearance suitable for receiving a clear finish.

1. Remove dirt and stains caused by handling, exposure to weather, rust, mold/fungus, spills, etc. using products formulated specifically for wood cleaning and removal of each type of stain.

2. Where removal of stains cannot be achieved with stain removal products, sand the surface of the wood down to clean, pristine wood free of staining.

3. Do not apply clear varnish to wood until all stains have been completed removed and wood has appearance of freshly cut lumber.

3.05 PROTECTION

A. Protect finish surfaces, landscaping, adjacent property, vehicles, and elements surrounding the work of this section from overspray, damage or disfiguration.

B. Maintain subfloor surfaces free from paint and spills using heavy paper or other method.

3.06 APPLICATION

A. Apply products in accordance with manufacturer's instructions and MPI (APSM) Manuall.

B. Apply sufficient wet film thickness to provide good hiding, do not thin product.

C. Where adjacent sealant is to be painted, do not apply finish coats until sealant is applied.

D. Do not apply finishes to surfaces that are not dry.

E. Allow applied coats to dry completely before next coat is applied.

F. Apply each coat to uniform appearance. Apply each coat of paint slightly darker than preceding coat unless otherwise approved.

G. Vacuum clean surfaces of loose particles. Remove dust and particles just prior to applying next coat.

H. Interior Gypsum Board: After paint has been spray or roller applied to uniform wet film thickness, backroll entire surface in same direction to provide uniform texture, reflective value and appearance, free of roller marks or lines.

3.07 FINISHING MECHANICAL AND ELECTRICAL EQUIPMENT

A. Remove louvers, grilles, covers, and access panels on mechanical and electrical components and paint separately.

B. Reinstall electrical cover plates, hardware, light fixture trim, escutcheons, and fittings removed prior to finishing.

3.08 CLEANING

A. Collect waste material which may constitute a fire hazard, place in closed metal containers, and remove daily from site.

3.09 SURFACES THAT DO NOT REQUIRE PAINT FINISH

A. The following work is not field painted or finished by this section:

1. Pavement markings.

2. Site furnishings.

3. Exterior masonry veneer.

4. Concrete floors.

5. Shop finished interior wood trim.

6. Fire rating labels, equipment serial numbers and capacity labels.

7. Prefinished fiber cement siding.

8. Factory finished hardwood veneer faced wood doors.

9. Factory prefinished preformed metal panels except as specifically noted in the Paragraph “Schedule – Paint Systems” below.

10. Factory finished overhead sectional doors.

11. Aluminum storefront doors and frames.

12. Door hardware.

13. Glazing.

14. Exterior louvers.

15. Ceramic / Porcelain tile.

16. Resilient floor coverings and rubber base.

17. Plastic sheet wainscots.

18. Interior signage.

19. Toilet partitions.

20. Fire extinguisher cabinets.

21. Toilet and miscellaneous accessories.

22. Elevator.

3.10 SURFACES THAT REQUIRE PAINT FINISH

A. Paint materials / surfaces described below under SCHEDULE - PAINT SYSTEMS.

B. Hollow metal doors and frames.

C. Firestopping / smoke seal exposed to view.

D. Factory-finished items that require painting:

1. Underside of prefinished ribbed metal roofing exposed to view.

2. Access panels / doors.

E. Mechanical and Electrical: Use paint systems defined for the substrates to be finished.

1. Interior mechanical grilles and louvers.

2. Paint exposed to view insulated and exposed pipes, conduit, boxes, insulated and exposed ducts, and hangers, brackets, collars and supports to match background surfaces, unless otherwise indicated.

3. Paint shop-primed items.

4. Electrical panels exposed to view in public or occupied spaces.

5. Paint interior surfaces of air ducts that are visible through grilles and louvers with one coat of flat black paint to visible surfaces.

3.11 FIRE / SMOKE PARTITION MARKING AND IDENTIFICATION

A. Provide painted text using a letter stencil identifying fire-resistive partitions and smoke partitions as follows:

1. Locate in accessible concealed floor, floor-ceiling or attic space.

2. Letters shall be not less than 3-inch in height with a 3/8-inch stroke in color contrasting with the wall color.

3. Text: “FIRE AND / OR SMOKE BARRIER – PROTECT ALL OPENINGS”

4. Painted identification text shall be placed within 15 feet of each end of wall and not more than 30 feet on center horizontally along length of wall or partition.

3.12 SCHEDULE – PAINT SYSTEMS (WORK IS MPI PREMIUM GRADE)

A. Materials / surfaces scheduled hereinafter shall be painted in accordance with designated MPI (APL) or proprietary systems and product requirements.

1. Sheen on finish coats shall be as selected by Architect from manufacturer’s paint sheen samples.

2. Use the same manufacturer for each coat specified for a given system, do not intermix different manufacturer’s products within the same paint system unless specifically approved by manufacturer(s) and products are known to be compatible for use together.

a. Where primer is applied by others:

1) Select paint system compatible with primer installed by others.

2) Test compatibility and adhesion of proposed paint products over primer prior to application.

b. Paint failure due to incompatibility between different manufacturer's products are Contractor's responsibility to correct.

B. Manufactured Stone Veneer: Finish all exposed to view surfaces.

1. Exterior: Proprietary System:

a. Clear Water Repellant / Sealer (Vertical Surfaces): Evonik Industries *Protectosil Chem-Trete BSM 400*; clear and colorless.

1) Apply per manufacturer's recommended application method for number of coats and application method for specific substrate.

b. Clear Water Repellant / Sealer (Horizontal and Sloped Surfaces): Evonik Industries *Protectosil Chem-Trete PB 100*; clear, colorless.

1) Apply per manufacturer's recommended application method for number of coats and application method for specific substrate.

C. Ferrous Metal, Galvanized Steel, and Aluminum: Finish every surface.

1. Exterior and Interior: Proprietary System.

a. Factory Prime / Finish Coat: Damaged factory primer / finish coat requires touch up of bare areas with Sherwin Williams *Pro-Cryl Primer.*

b. First Coat: Sherwin Williams *Pro Industrial Waterbased Alkyd Urethane Enamel.*

c. Second Coat: Sherwin Williams *Pro Industrial Waterbased Alkyd Urethane Enamel.*

d. Application: Spray.

e. MPI Gloss Level 5.

2. Interior and Exterior Hollow Metal Doors, Hollow Metal Frames, and Vision Panels: Proprietary System.

a. Factory Prime / Finish Coat: Damaged factory primer / finish coat requires touch up of bare areas with Sherwin Williams *Pro-Cryl Primer.*

b. First Coat: Sherwin Williams *Pro Industrial Waterbased Alkyd Urethane Enamel.*

c. Second Coat: Sherwin Williams *Pro Industrial Waterbased Alkyd Urethane Enamel.*

d. Application: Spray.

e. MPI Gloss Level 5.

D. Glue-Laminated Beams:

1. Exterior: MPI EXT 6.1E.

a. First Coat: Semi-Transparent Stain, MPI Product #13.

b. Second Coat: Polyurethane, MPI Product #78.

c. Third Coat: Polyurethane, MPI Product #78.

d. Fourth Coat: Polyurethane, MPI Product #78.

e. Application: Spray.

2. Interior: MPI INT 6.1J.

a. First Coat: Semi-Transparent Stain, MPI Product #90.

b. Second Coat: Polyurethane Varnish, MPI Product #56.

c. Third Coat: Polyurethane Varnish, MPI Product #56.

d. Fourth Coat: Polyurethane Varnish, MPI Product #56.

e. Application: Spray.

3. Interior Glue-Laminated Wood Stair Treads: MPI INT 6.5J.

a. First Coat: Semi-Transparent Stain, MPI Product #90.

b. Second Coat: Polyurethane, MPI Product #31.

c. Third Coat: Polyurethane, MPI Product #31.

d. Fourth Coat: Polyurethane, MPI Product #31.

E. T&G Wood Decking:

1. Exterior: MPI EXT 6.1E.

    a. First Coat: Semi-Transparent Stain, MPI Product #13.

    b. Second Coat: Polyurethane, MPI Product #78.

    c. Third Coat: Polyurethane, MPI Product #78.

    d. Fourth Coat: Polyurethane, MPI Product #78.

    e. Application: Spray.

2. Interior: MPI INT 6.2H.

    a. First Coat: Polyurethane Varnish, MPI Product #56.

    b. Second Coat: Polyurethane Varnish, MPI Product #56.

    c. Third Coat: Polyurethane Varnish, MPI Product #56.

    d. Application: Spray.

F. PVC Pipe Downspout Connections:

1. Exterior: MPI EXT 6.8A.

    a. First Coat: Water Base Bonding Primer, MPI Product #17.

    b. Second Coat: 100% Acrylic Latex, MPI Product #10.

    c. Third Coat: 100% Acrylic Latex, MPI Product #10.

    d. Application: Spray or brush.

    e. MPI Gloss Level 1.

G. Fiber Cement Soffits and Associated Trims, Flashings, Reveals, and Vents: Finish every surface

1. Exterior: MPI EXT 3.3A.

    a. First Coat: 100% Acrylic Latex, MPI Product #15.

        1) Factory primed siding / trim / reveals requires only touch up of bare spots with primer and second and third coats.

    b. Second Coat: 100% Acrylic Latex, MPI Product #15.

    c. Third Coat: 100% Acrylic Latex, MPI Product #15.

    d. Application: Spray and backbrush.

e. MPI Gloss Level 3.

H. Gypsum Board:

1. Interior: MPI INT 9.2.A.

a. First Coat: Waterborne primer / sealer, MPI Product #50.

b. Second Coat: Interior latex, MPI Product #43.

c. Third Coat: Interior latex, MPI Product #43.

d. Application: Spray and backroll.

e. MPI Gloss Level: MPI Gloss Level 2 or 3 or as selected by Architect for specific use areas.

3.13 FIELD QUALITY CONTROL

A. Contractor Quality Control: Employ / assign quality control personnel to monitor the work of this section for conformance to the requirements of the Contract Documents and to good construction practices.

1. Contractor is solely responsible for managing and controlling the quality of the work and conformance with the requirements of the Contract Documents.

END OF SECTION

SECTION 10 1400

INTERIOR SIGNAGE

PART 1 GENERAL

1.01 RELATED DOCUMENTS

A. Drawings and general provisions of the Contract, including General Conditions, Supplementary Conditions and Divisions 00 and 01 Specification Sections, apply to work of this section.

1.02 SECTION INCLUDES

A. Interior Building Signage.

1.03 SCOPE OF WORK

A. Field verify site conditions and dimensions affecting signage installation and coordinate with signage design and installation.

B. Provide final design for signage based on the schematic level signage design shown in the Contract Documents.

C. Provide signage shop drawings showing the final design for each sign type required for the project.

1.04 PERFORMANCE REQUIREMENTS

A. ADA Standards Accessible Signage shall comply with the ICC A117.1 Chapter 7 including the Washington State Amendments. Signage shall comply with IBC, Chapters 9, 10 and 11 including color requirements.

1. Character Proportion: Letters and numbers on signs shall have a width-to-height ratio between 3:5 and 1:1 and a stroke width-to-height ratio between 1:5 and 1:10.

2. Color Contrast: Characters and symbols shall contrast with their background – either light characters on a dark background or dark characters on a light background.

3. Raised Characters / Symbols: Letters, numbers and symbols shall be raised 1/32-inch minimum; letters and numbers shall be sans serif characters and have a height between 5/8-inch and 2-inches.

1.05 REFERENCES

A. References shall be the edition current as of the date of the Contract Documents.

B. ADA Standards - 2010 ADA Standards for Accessible Design.

C. IBC - International Building Code.

D. ICC A117.1 - Accessible and Usable Buildings and Facilities.

1.06 SUBMITTALS

A. Refer to Section 01 3300 for submittal procedures.

B. Product Data: Submit manufacturer's technical data for each type of sign or manufactured component required.

C. Shop Drawings: Indicate size, thickness and finishes for each sign type; include methods of attachment for each different substrate and sign type. Provide details and sections at full size. Proposed deviations from the Contract Drawings shall be clearly identified.

1. Installer to submit CAD generated location plan noting the location of each sign and cross referenced to sign type schedule.

2. Copy Layout: Provide scaled drawings showing copy layout for each sign type. Show exact letter, number, symbols, arrows, letter/word/line size, spacing, margins, braille, etc. positioned within the sign face outline. Copy layouts will be adjusted during Architect's review when required to conform to the design intent; revise and resubmit for final approval.

D. Text Information Supplied by Owner: Allow sixty (60) days for Owner verification of signage text noted herein to be verified by Owner during submittal process.

E. Operations and Maintenance Data: Submit operation and maintenance instructions for signage.

1. Provide cleaning instructions for each different surface / finish exposed to view on signage.

2. Provide a comprehensive Signage Manual in both a paper and PDF format. The Manual shall include shop drawings, signage location plan, signage type and copy schedule, computer graphics files, paper insert templates, mounting details and signage reorder information.

a. Include listing of product and color selections (manufacturer product and color number) for each different finish and color applied on signage.

1.07 QUALITY ASSURANCE

A. Signage Fabricator Qualifications: Minimum of five (5) years of successful experience in fabrication and installation of signage similar in type and scope to those required for this project, with record of successful fabrication and installation and sufficient capacity to produce and install the required signage within the project schedule.

1. Obtain signs from one (1) source and a single fabricator.

2. The signage fabricator shall have broad in-house knowledge, diverse shop and field experience, flexibility, coordination ability, skilled craftsmen and a physical plant necessary to produce quality products equivalent to or superior to similar type products produced by other signage fabricators in the same area of expertise.

3. Installers shall be employees of fabricator, trained and experienced in signage installation using best workmanship.

4. Upon request, provide list of at least five (5) recently completed projects along with names and contact information for project Owner and Architect.

B. Workmanship / Quality: Signage fabrications shall employ the best fabrication practices common to the signage industry and to the highest standards of workmanship. Fabrications shall be free of imperfections in material and workmanship and suitable for its intended use and location.

1.08 FIELD CONDITIONS

A. Conduct inspection of conditions on project site and review of signage locations.

B. For signage that must fit closely within an existing condition or architectural detail, field measure and adjust sign to fit in the space.

C. Field verify / measure dimensions and review site conditions prior to submitting shop drawings.

D. Coordinate signage work with Contract Drawings, change directives and as-built conditions.

1.09 DELIVERY, STORAGE AND HANDLING

A. Package signage for protection during shipping, storage and installation.

B. Products should remain in original packaging until installation. Store products in a dry, indoor location.

1.10 WARRANTY

A. Provide two (2) year warranty covering the following:

1. Signage shall be warranted against defects in materials and workmanship. Promptly correct at no expense to the Owner any defective signage resulting from defective or inferior materials or workmanship.

2. Defective materials and workmanship include, but are not limited to, the following: Delaminating of sign parts or finishes, cupping, warping or dishing of surfaces, bubbling, crazing, chalking, or fading of finishes, rusting or corrosion of parts, installations that are not plumb or securely fastened, use of incorrect finishes or materials, or unapproved deviations from the Contract Documents or approved shop drawings.

PART 2 PRODUCTS

2.01 INTERIOR BUILDING SIGNAGE

A. Manufacturer / Product: ASI Signage Innovations, *InTouch 2 Series* is the standard of quality, function, performance and appearance required for this project.

1. ASI Signage Innovations; *InTouch 2 Series* (specified, basis of design).

2. Products by other manufacturers may be acceptable, subject to their ability to meet or exceed this standard and provide products conforming with the requirements of the Drawings and Specification.

3. Substitutions: Refer to Section 01 6000 for substitution procedures and requirements. Proposed substitutions must match specified product performance and colors.

B. General Requirements for Interior Signage:

1. Typography:

a. Type Style: Helvetica Medium, unless noted otherwise.

b. Character Spacing: Use normal spacing, unless noted otherwise.

2. Arrows, symbols and logo art: To be provided in style, sizes, colors and spacing as shown on Drawings.

2.02 INTERIOR BUILDING SIGNAGE TYPES

2.03 FABRICATION

A. Provide lettering and graphics precisely formed, uniformly opaque to comply with relevant ADA Standards regulations and requirements indicated for size, style, spacing, content, position and colors. Tactile characters to be raised min. 1/32-inch from surface. Computerized translation of sign copy to be responsibility of the manufacturer.

B. The signage shall utilize an ethylene-vinyl acetate (EVA) adhesive with low or no VOC's. The adhesive shall be nonhazardous and shall allow for flexing and deflection of the adhered components due to changes in temperature and moisture without bond failure.

C. Sign edges are to be straight, polished and free from saw marks and other imperfections. The corners of the sign are square.

D. Mounting: Waterproof silicone glue and VHB tape or mechanical fasteners depending on the signage type specified.

PART 3 EXECUTION

3.01 COORDINATION

A. Review, coordinate and accommodate work of other trades that interface with, affect or are affected by the work of this section so as to facilitate the execution of the overall work of this project in a coordinated and efficient manner.

B. Coordinate signage installation with work of other trades.

C. Coordinate signage installation schedules with General Contractor.

D. Coordinate backing required for attachment of any signage attached with screw fasteners.

3.02 EXAMINATION

A. Examine the substrate and conditions under which the signs are to be installed and verify that all such work is complete for proper installation of the signs.

B. Installer shall notify General Contractor of unsatisfactory conditions; installer shall not proceed until unsatisfactory conditions are corrected.

C. Verify clearance, anchorage methods and final location for each sign before installation.

D. Install signs after all wall and ceiling surfaces are painted and finished.

E. Start of installation indicates acceptance of substrate and conditions as acceptable.

3.03 INSTALLATION

A. Install signage in locations noted on schedule included at end of this section and as shown on Drawings in accordance with manufacturer's installation instructions.

1. Installation locations shall be in accordance with ADA Standards requirements.

2. Locate signs where indicated using mounting methods in compliance with manufacturer's written instructions.

B. The sign contractor will coordinate installation schedules with General Contractor.

C. Installation shall be performed by manufacturer's personnel trained and certified in manufacturer's methods and procedures.

D. Install level, plumb and at the proper height with sign surfaces free from defects. Mounting height shall be in accordance with ADA Standards requirements. Refer also to Drawings / schedules for signage installation requirements.

E. Cooperate with other trades for installation of sign units to finish surfaces. Repair or replace damaged units.

F. Clean and polish in accordance with manufacturer's recommendations.

G. Upon completion of the work, signage contractor shall remove unused or discarded materials, containers and debris from site.

3.04 WORKMANSHIP

A. Signage shall be installed using the best workmanship, including the following:

1. Consistent color, gloss and finish appearance; surfaces free of discoloration, hazing, inconsistent gloss, or defects.

2. Signs installed plumb, level, in square alignment and at required height.

3. Free-standing signs securely attached and free of movement or misalignment.

4. No scratches, stains or damage on signs.

5. Fasteners installed securely into solid backing / substrate.

6. Fasteners installed square with sign face and tightened down snug without misalignment, overtightening or space under head

7. No damage to surrounding finishes or work.

B. Signage installed with improper or poor workmanship shall be removed and replaced at Contractor's expense.

3.05 CLEANING

A. Clean sign surfaces and touch up any flaws or marring caused during installation. Signage shall be clean and free of glue, tape, and other extraneous materials.

B. Clean the site and signage, removing debris related to the installation of the signs.

3.06 PROTECTION OF WORK

A. Protect signage from damage during construction.

B. Repair any finishes on signs and surrounding architectural surfaces damaged during field installation so there is no evidence of corrective work. Return items which cannot be refinished in the field to the shop, make required alterations, and refinish the entire unit or provide new unit at fabricator's option.

3.07 SCHEDULE AND DETAILS

A. Provide one (1) sign for each room in this project – unless otherwise noted on sign schedule in the documents.

B. Manufacturer shall provide a comprehensive Standards Manual in both a paper and PDF format. The manual shall include all renderings, drawings, location plan, message schedule, insert templates, mounting detail and reorder information.

3.08 FIELD QUALITY CONTROL

A. Contractor Quality Control: Employ / assign quality control personnel to monitor the work of this section for conformance to the requirements of the Contract Documents and to good construction practices.

1. Contractor is solely responsible for managing and controlling the quality of the work and conformance with the requirements of the Contract Documents.

3.09 SIGNAGE SCHEDULE AND LOCATION PLAN – REFER TO DRAWINGS

END OF SECTION

SECTION 10 1401

EXTERIOR SIGNAGE

PART 1 GENERAL

1.01 RELATED DOCUMENTS

A. Drawings and general provisions of the Contract, including General Conditions, Supplementary Conditions and Divisions 00 and 01 Specification Sections, apply to work of this section.

1.02 SECTION INCLUDES

A. Exterior Building Signage:

1.03 SCOPE OF WORK

A. Field verify site conditions and dimensions affecting signage installation and coordinate with signage design and installation.

B. Provide final design for signage based on the schematic level signage design shown in the Contract Documents.

C. Provide signage shop drawings showing the final design for each sign type required for the project.

D. Install signage in accordance with approved shop drawings.

1.04 PERFORMANCE REQUIREMENTS

A. ADA Standards Accessible Signage shall comply with the ICC A117.1 Chapter 7 including the Washington State Amendments. Signage shall comply with IBC, Chapters 9, 10 and 11 including color requirements.

1.05 REFERENCES

A. References shall be the edition current as of the date of the Contract Documents.

B. ADA Standards - 2010 ADA Standards for Accessible Design.

C. IBC - International Building Code.

D. ICC A117.1 - Accessible and Usable Buildings and Facilities.

1.06 SUBMITTALS

A. Refer to Section 01 3300 for submittal procedures.

B. Product Data: Submit fabricator's technical data for each manufactured component required.

C. Shop Drawings: Provide shop drawings showing locations of signage on site plan, plan view, elevations, sections, details, anchoring method, materials, finishes, signage structures and connections, lighting, and artwork.

1. Copy Layout Drawings: Provide scaled drawings showing copy layout for each sign type. Show exact letter, number, symbols, arrows, letter / word / line size, spacing, margins, etc. positioned within the sign face outline. Copy layouts will be adjusted during Architect's review when required to conform to the design intent; resubmit for final approval.

D. Text Information Supplied by Owner: Allow sixty (60) days for Owner verification of signage text noted herein to be verified by Owner during submittal process.

E. Operations and Maintenance Data: Submit fabricator's operation and maintenance instructions for signage and electrical components.

1. Provide cleaning instructions for each different surface / finish exposed to view on signage.

1.07 QUALITY ASSURANCE

A. Signage Fabricator Qualifications: Minimum of five (5) years of successful experience in fabrication and installation of signage similar in type and scope to those required for this project, with record of successful fabrication and installation and sufficient capacity to produce and install the required signage within the project schedule.

1. Obtain signs from one (1) source and a single sign fabricator.

2. The signage fabricator shall have broad in-house knowledge, diverse shop and field experience, flexibility, coordination ability, skilled craftsmen and a physical plant necessary to produce quality products equivalent to or superior to similar type products produced by other signage fabricators in the same area of expertise.

3. Installers shall be employees of fabricator trained and experienced in signage installation using best workmanship.

4. Upon request, provide list of at least five (5) recently completed projects along with names and contact information for project Owner and Architect

B. Workmanship / Quality: Signage fabrications shall employ the best fabrication practices common to the signage industry and to the highest standards of workmanship. Fabrications shall be free of imperfections in material and workmanship and suitable for its intended use and location.

1.08 FIELD CONDITIONS

A. Conduct an on-site inspection of existing and as-built conditions and review of signage locations prior to preparing submittals.

B. For signage that must fit closely within an existing condition or architectural detail, field measure and adjust sign to fit in the space.

C. Field verify / measure dimensions and review site conditions prior to submitting shop drawings.

D. Coordinate signage work with Contract Drawings, change directives and as-built conditions.

1.09 DELIVERY, STORAGE AND HANDLING

A. Package signage for protection during shipping, storage and installation.

B. Products should remain in original packaging until installation. Store products in a dry, indoor location.

1.10 WARRANTY

A. Provide two (2) year warranty covering the following:

1. Signage shall be warranted against defects in materials and workmanship. Promptly correct at no expense to the Owner any defective signage resulting from defective or inferior materials or workmanship.

2. Defective materials and workmanship include, but are not limited to, the following: Delaminating of sign parts or finishes, cupping, warping or dishing of surfaces, bubbling, crazing, chalking, or fading of finishes, rusting or corrosion of parts, installations that are not plumb or securely fastened, use of incorrect finishes or materials, or unapproved deviations from the Contract Documents or approved shop drawings.

PART 2 PRODUCTS

2.01 EXTERIOR BUILDING SIGNAGE

A. General Requirements for Exterior Signage:

1. Typography:

a. Type Style: Helvetica Medium, unless noted otherwise.

b. Letter Spacing: Use normal spacing, unless noted otherwise.

2. Arrows, Symbols and Logo Art: To be provided in style, sizes, colors and spacing as shown on Drawings.

3. Grade II Braille, utilizing one-piece photo-polymer process.

PART 3 EXECUTION

3.01 COORDINATION

A. Review, coordinate and accommodate work of other trades that interface with, affect or are affected by the work of this section so as to facilitate the execution of the overall Work of this project in a coordinated and efficient manner

B. Coordinate signage installation schedules with General Contractor.

3.02 EXAMINATION

A. Contractor, Sign Contractor, Architect, Owner, and Owner Representative(s) shall conduct a walk through to review staked out sign locations.

B. Examine the substrate work by others and conditions under which the signs are to be installed and verify that all such work is complete for proper installation of the signs. Installer shall notify General Contractor of unsatisfactory conditions; installer shall not proceed until unsatisfactory conditions are corrected.

C. Verify dimensions, clearance, anchorage methods and final location for each sign before installation.

D. Start of installation indicates acceptance of substrate and conditions as acceptable.

3.03 INSTALLATION – SIGNAGE

A. Sign installation Foreman shall be present on site and directly controlling the signage installation work at all times that signage work is in progress on site.

B. Install signage in locations noted on Drawings in accordance with fabricator's installation instructions and shop drawings.

1. Install signs level, plumb, and true.

2. Mount signage in conformance with location requirements contained in the IBC, ICC A117.1, and Washington State Building Code Amendments.

3. Mount signage securely to substrate surface using adhesive or noncorrosive fasteners in conformance with mounting methods shown on shop drawings and in compliance with fabricator's instructions.

4. Installation shall be performed by sign fabricator's personnel trained and experienced in fabricator's recommended installation methods and procedures.

C. Install signage level, plumb and at the proper height with sign surfaces free from defects. Mounting heights shall conform to ADA Standards requirements. Refer also to drawings / schedules for signage installation requirements.

D. Upon completion of the work, remove unused or discarded materials, containers and debris from site.

3.04 WORKMANSHIP

A. Signage shall be installed using the best workmanship, including the following:

1. Consistent color, gloss and finish appearance; surfaces free of discoloration, hazing, inconsistent gloss, or defects.

2. Signs installed plumb, level, in square alignment and at required height.

3. No scratches, stains or damage on signs.

4. No damage to surrounding finishes or work.

B. Signage installed with improper or poor workmanship shall be removed and replaced at Contractor's expense.

3.05 CLEANING

A. Clean sign surfaces and touch up any flaws or marring caused during installation. Signage shall be clean and free of glue, tape, and other extraneous materials.

B. Clean the site and signage, removing debris related to the installation of the signs.

3.06 PROTECTION OF WORK

A. Protect signage from soiling and damage during and after installation.

B. Repair any finishes on signs and surrounding architectural surfaces damaged during field installation so there is no evidence of corrective work. Return items which cannot be refinished in the field to the shop, make required alterations, and refinish the entire unit or provide new unit at fabricator's option.

3.07 FIELD QUALITY CONTROL

A. Contractor Quality Control: Employ / assign quality control personnel to monitor the work of this section for conformance to the requirements of the Contract Documents and to good construction practices.

1. Contractor is solely responsible for managing and controlling the quality of the work and conformance with the requirements of the Contract Documents.

3.08 SIGNAGE SCHEDULE AND LOCATION PLAN – REFER TO DRAWINGS

END OF SECTION

SECTION 10 1419

DIMENSIONAL LETTER SIGNAGE

PART 1 GENERAL

1.01 RELATED DOCUMENTS

A. Drawings and general provisions of the Contract, including General Conditions, Supplementary Conditions and Divisions 00 and 01 Specification Sections, apply to work of this section.

1.02 SECTION INCLUDES

A. Exterior Dimensional Letter Building Signage.

1.03 QUALITY ASSURANCE

A. Qualifications of Sign Fabricator: A sign company which is regularly engaged in the fabrication and installation of specialty signs of the types specified and has been in business for a period of at least five (5) years. Submit a list of installations and other substantiating data that demonstrates experience in sign work similar to that indicated on drawings and in these specifications. Obtain signs from one source and a single manufacturer.Sign warranty: Minimum five (5) years.

B. Sign Warranty: Minimum five (5) years.

1.04 SUBMITTALS

A. Refer to Section 01 3300 for submittal procedures.

B. Product Data: Submit manufacturer's technical data and installation instructions for each type of sign required.

C. Shop Drawings:

1. Submit shop drawings of sign components, fittings, parts, and installation procedures showing layout, jointing, and complete anchoring and support systems for the various applications and mounting details.

2. Drawings shall indicate size, thickness, finishes of materials and shall include methods of attachment, demonstrating proper anchoring, expansion and sealing.

3. Drawings shall show provisions for performance functions described herein.

4. Provide details and sections at full size.

5. Differences from the drawings in this section shall be clearly identified.

6. Coordinate attachments with substrate and surrounding materials and products.

PART 2 PRODUCTS

2.01 EXTERIOR DIMENSIONAL LETTER BUILDING SIGNAGE

A. Manufacturer: Products by Gemini are the standard of quality, function, performance and appearance required for this project.

1. Gemini (specified, basis of design).

2. Products by other manufacturers may be acceptable, subject to their ability to meet or exceed this standard and provide products conforming with the requirements of the Drawings and Specification.

3. Substitutions: Refer to Section 01 6000 for substitution procedures and requirements. Proposed substitutions must match specified product performance and colors.

B. Exterior Dimensional Building Letters:

1. Exterior Building letters consist of cast metal letters. Letters are post mounted on a metal canopy at the building entrance.

2. Dimensional Letters:

a. Material: Cast Metal Letters.

b. Finish: Clear Anodized Aluminum.

c. Letter Thickness: 1-1/2-inch deep (approximately).

3. Message and Size:

a. Message: _____

b. Size: 18-inches tall.

4. Font:

a. Font Style: Gemini Twentieth (20th) Century.

b. Font Case: Letters shall be upper case.

5. Mounting: Post mounted on metal canopy. Refer to Drawings.

PART 3 EXECUTION

3.01 COORDINATION

A. Review, coordinate and accommodate work of other trades that interface with, affect or are affected by the work of this section so as to facilitate the execution of the overall work of this project in a coordinated and efficient manner.

3.02 EXAMINATION

A. Examine the substrate and conditions under which the signs are to be installed and verify that such work is complete for proper installation of the signs. Installer shall notify General Contractor of unsatisfactory conditions; installer shall not proceed until unsatisfactory conditions are corrected.

B. Install sign units and components at the locations shown or scheduled, securely mounted. Verify clearance, anchorage methods and final location for each sign before installation.

C. Install signs after painting is complete.

3.03 INSTALLATION

A. Install signage in locations shown on Drawings and in accordance with manufacturer's installation instructions.

B. The sign contractor will coordinate installation schedules with General Contractor.

C. Installation shall be performed by manufacturer's personnel trained and certified in manufacturer's methods and procedures.

D. Install level, plumb, and at the proper height with sign surfaces free from defects.

E. Cooperate with other trades for installation of sign units to finish surfaces. Repair or replace damaged units.

F. Clean and polish in accordance with manufacturer's recommendations.

G. Upon completion of the work, signage contractor shall remove unused or discarded materials, containers and debris from site.

3.04 PROTECTION OF WORK

A. Package to prevent damage or deterioration during shipment, handling, storage and installation. Products should remain in original packaging until removal is necessary. Store products in a dry, indoor location.

B. Provide protection of signage elements during construction. Repair finishes of signs and surrounding architectural surfaces damaged by field installation. Restore finishes so there is no evidence of corrective work. Return items which cannot be refinished in the field to the shop, make required alterations, and refinish the entire unit or provide new unit at fabricator's option.

3.05 FIELD QUALITY CONTROL

A. Contractor Quality Control: Employ / assign quality control personnel to monitor the work of this section for conformance to the requirements of the Contract Documents and to good construction practices.

1. Contractor is solely responsible for managing and controlling the quality of the work and conformance with the requirements of the Contract Documents.

END OF SECTION

SECTION 10 2113

SCRC TOILET PARTITIONS

PART 1 GENERAL

1.01 RELATED DOCUMENTS

A. Drawings and general provisions of the Contract, including General Conditions, Supplementary Conditions and Divisions 00 and 01 Specification Sections, apply to work of this section.

1.02 SECTION INCLUDES

A. Solid Color Reinforced Composite (SCRC) Toilet Partitions.

1.03 REFERENCES

A. References shall be the edition current as of the date of the Contract Documents.

B. ADA Standards - 2010 ADA Standards for Accessible Design.

C. ICC A117.1 - Accessible and Usable Buildings and Facilities.

1.04 SUBMITTALS

A. Refer to Section 01 3300 for submittal procedures.

B. Product Data: Provide data on panel construction, hardware and accessories.

C. Shop Drawings:

1. Indicate partition plan, elevation views, dimensions, details of wall supports, door swings.

2. Indicate anchorages and all accessory items.

3. Include location drawings for bolt hole locations in supporting members for attachment of compartments.

D. Samples: Submit two (2) color samples of each selected solid color reinforced composite color.

1.05 DELIVERY, STORAGE AND HANDLING

A. Deliver items in manufacturer's original unopened protective packaging.

B. Store materials in original protective packaging to prevent physical damage or wetting.

C. Handle so as to prevent damage to finished surfaces.

1.06 PROJECT CONDITIONS

A. Coordinate the work with placement of support framing and anchors in wall.

1.07 WARRANTY

A. Furnish ten (10) year limited warranty for panels, doors and stiles against breakage, corrosion, delamination and defects in factory workmanship.

B. Furnish one (1) year guarantee against defects in material and workmanship for stainless steel door hardware and mounting brackets.

PART 2 PRODUCTS

2.01 SOLID COLOR REINFORCED COMPOSITE (SCRC) TOILET PARTITIONS

A. Manufacturer / Product: Bobrick Washroom Equipment, Inc., *Sierra Series* is the standard of quality, function, performance and appearance required for this project.

1. Bobrick Washroom Equipment, Inc.; *Sierra Series* (specified, basis of design).

2. Products by other manufacturers may be acceptable, subject to their ability to meet or exceed this standard and provide products conforming with the requirements of the Drawings and Specification.

3. Substitutions: Refer to Section 01 6000 for substitution procedures and requirements. Proposed substitutions must match specified product performance and colors.

B. General: Doors, Pilasters, and Panels assembled into complete compartment system, with cutouts and drilled holes to receive hardware as indicated; processed and fabricated in a craftsman-like manner; complying with ICC A117.1, ADA Standards, and as follows:

1. Toilet compartment shall be floor-mounted, overhead-braced, with panels, pilasters and doors constructed from solid color reinforced composite material.

2. Partition Configurations:

a. Toilet Compartments:

1) Compartment Depth and Width: As indicated on Drawings.

2) Door Width: 24-inches, minimum; at wheelchair accessible compartments, 32-inches, inside clear minimum.

3) Doors and Panels:

a) Top at 70-inches above finished floor.

b) Bottom at 12-inches above finished floor.

4) Pilaster Width: As required to fit space; minimum 3-inches.

5) Pilaster Height: 83-1/2-inches.

3. Colors / Finishes: _____.

C. Components:

1. Doors and Pilasters: 3/4-inch thick solid color reinforced composite material.

2. Panels: 1/2-inch thick solid color reinforced composite material.

3. Material:

a. Doors, Pilasters, and Panels shall be fabricated from solid color reinforced composite material (SCRC), which is composed of dyes, organic fibrous material and polycarbonate / phenolic resins. Material shall have a non-ghosting, graffiti-resistant surface integrally bonded to core through a series of manufacturing steps requiring thermal and mechanical pressure. Edges of material shall be the same color as the surface.

4. Hardware: Heavy-duty Type 304 stainless steel; Bobrick 1092 Standard Heavy-Duty Hardware and the following:

a. Anti-Theft Fasteners: Provide stainless steel center pin Torx anti-theft screw fasteners at all locations.

1) Through-Bolts: Stainless steel pin in head Torx anti-theft screw heads with threaded barrel female end.

b. Door Hinges: Full height, spring-loaded self-closing.

c. Door Latch: Heavy-duty reinforced through-bolted latch and keeper assembly, through-bolted.

d. Door Pull: Stainless steel pull, through-bolted.

e. Door Stops: Heavy-duty, through-bolted.

f. Pilaster Floor Anchors: Stainless steel mounting bar with #4 satin finish; provide leveling device adjustment and stainless steel anchor bolts.

g. Pilaster Trim Shoe: One piece stainless steel #4 satin finish.

h. Panel to Panel Connection: Full height stainless steel U-channel, through-bolted.

i. Panel to Wall Connection: Full height stainless steel angles each side of panel, through-bolted.

j. Headrail shall be heavy aluminum extrusion (6463-T5) with clear satin anodized finish in anti-grip configuration.

k. Headrail Wall Brackets: Heavy-duty stainless steel.

l. Coat Hook: Stainless steel, through-bolted, one per compartment, mounted on door.

PART 3 EXECUTION

3.01 COORDINATION

A. Review, coordinate and accommodate work of other trades that interface with, affect or are affected by the work of this section so as to facilitate the execution of the overall Work of this project in a coordinated and efficient manner.

B. Coordinate location of backing with Section 06 1000.

C. Schedule installation to follow completion of painting and flooring.

3.02 EXAMINATION

A. Verify construction and conditions before starting work.

B. Verify that field dimensions are as required.

C. Verify correct spacing of and between plumbing fixtures.

D. Verify correct location of framing and backing.

E. Start of installation indicates acceptance of construction and conditions.

3.03 INSTALLATION

A. Install partitions secure, rigid, plumb, and level in accordance with manufacturer's installation instructions.

B. No evidence of drilling, cutting, or patching shall be visible in the finished work.

C. Clearance at vertical edges of doors shall be uniform top to bottom and shall not exceed 1/4-inch.

D. Seal all fasteners into floor watertight with silicon sealant.

3.04 ADJUSTING AND CLEANING

A. Hardware Adjustment: Adjust and lubricate hardware for proper operation. Set hinges on in-swing doors to hold open approximately 30 degrees from closed position when unlatched. Set hinges on out-swing doors (and entrance swing doors) to return to fully closed position.

B. Clean and Protect: Clean exposed surfaces of compartment systems using materials and methods recommended by manufacturer, and provide protection as necessary to prevent damage during remainder of construction period.

3.05 FIELD QUALITY CONTROL

A. Contractor Quality Control: Employ / assign quality control personnel to monitor the work of this section for conformance to the requirements of the Contract Documents and to good construction practices.

1. Contractor is solely responsible for managing and controlling the quality of the work and conformance with the requirements of the Contract Documents.

END OF SECTION

SECTION 10 2800

TOILET AND MISCELLANEOUS ACCESSORIES

PART 1 GENERAL

1.01 RELATED DOCUMENTS

A. Drawings and general provisions of the Contract, including General Conditions, Supplementary Conditions and Divisions 00 and 01 Specification Sections, apply to work of this section.

1.02 SECTION INCLUDES

A. Contractor-Furnished / Contractor-Installed (CFCI) Toilet and Miscellaneous Accessories.

1.03 REFERENCES

A. References shall be the edition current as of the date of the Contract Documents.

B. ANSI Z97.1 - American National Standard for Safety Glazing Materials Used in Buildings - Safety Performance Specifications and Methods of Test.

C. IBC - International Building Code.

D. ICC A117.1 - Accessible and Usable Buildings and Facilities.

1.04 SUBMITTALS

A. Refer to Section 01 3300 for submittal procedures.

B. Product Data: Provide data on accessories describing size, finish, details of function, backing required and attachment methods.

C. Contractor is responsible to verify the quantity of toilet and miscellaneous accessories. Approval of quantities during the submittal review does not relieve the contractor of this responsibility.

PART 2 PRODUCTS

2.01 CONTRACTOR-FURNISHED / CONTRACTOR-INSTALLED (CFCI) TOILET AND MISCELLANEOUS ACCESSORIES

A. Manufacturers: Products listed below are the basis of design and the standard of quality, function and performance required for this project. Products by the following manufacturers that meet or exceed this standard of quality and function are also acceptable:

1. American Specialties, Inc. (ASI).

2. Bobrick.

3. Bradley Corp.

4. Parker.

B. **E-_____** Grab Bars:

1. Manufacturer / Product: Bobrick; *Series B-6806.99 1-1/2-inch Diameter Stainless Steel Grab Bars with Snap Flange.*

2. Material: 18 gauge stainless steel.

a. Finish: Smooth, No. 4 finish (satin) on ends and slip-resistant texture in grip area.

3. Outside Diameter: 1-1/2-inches.

4. Configuration and Length: As indicated on Drawings.

5. Fasteners: Type 304 stainless steel.

C. **E-_____** Surface Mounted Toilet Paper Dispenser:

1. Manufacturer / Product: Bobrick; *B-2888*.

2. Description: Multi-roll, toilet tissue dispenser.

3. Mounting: Surface Mounted.

4. Material: 22-gauge stainless steel.

5. Finish: Stainless steel, No. 4 finish (satin).

D. **E-_____** Surface Mounted Sanitary Napkin Disposal:

1. Manufacturer / Product: Bobrick; *B-254*.

2. Mounting: Surface Mounted.

3. Material: Type 304, 22 gauge, stainless steel.

4. Finish: Stainless steel, No. 4 finish (satin).

E. **E-_____** Surface Mounted Toilet Seat Cover Dispensers:

1. Manufacturer / Product: Bobrick; *B-221*.

2. Mounting: Surface Mounted.

3. Material: Type 304, 22 gauge, stainless steel.

4. Finish: Stainless steel, No. 4 finish (satin).

F. **E-_____** Surface Mounted Mirror:

1. Manufacturer / Product: Bobrick; *B-165 Series*.

2. Mirror with welded stainless steel angle frame.

3. Provide with laminated safety glass conforming to ANSI Z97.1.

4. Sizes: As shown on the Drawings.

G. **E-_____** Surface Mounted Sanitary Napkin Dispenser:

1. Manufacturer / Product: Bobrick; *B-47069 Contura Series Surface-Mounted Napkin / Tampon Vendor*.

H. **E-_____** Surface Mounted Diaper Changing Station:

1. Manufacturer / Product: Koala Kare Products; *KB310-SSWM Horizontal Wall Mounted Stainless Steel Finish Baby Changing Station*.

I. **E-_____** Surface Mounted Electric Hand Dryer:

1. Manufacturer / Product: Excel Dryer; *Xlerator Model XL-W*.

2. Color: White.

3. Coordinate power requirements with Division 26 installer, tested and labeled by Underwriters Laboratory, Inc.

4. ICC A117.1 Compliant.

J. **E-_____** Utility Shelf with Mop and Broom Holder:

1. Manufacturer / Product: Bobrick; *B-236 x 34 Utility Shelf with Mop / Broom Holders and Rag Hooks*.

PART 3 EXECUTION

3.01 COORDINATION

A. Review, coordinate and accommodate work of other trades that interface with, affect or are affected by the work of this section so as to facilitate the execution of the overall Work of this project in a coordinated and efficient manner.

B. Coordinate location, layout and type of backing in walls to receive accessories with Section 06 1000.

C. Coordinate electrical installation requirements of the accessories with Division 26 installer.

3.02 EXAMINATION

A. Verify backing and installation conditions are correct before starting work.

B. Verify that the electrical rough-in is installed for accessories that require power.

C. Verify exact location of accessories for installation.

D. Verify that field measurements are as indicated on Drawings.

E. Start of installation indicates acceptance of backing and installation conditions.

3.03 PREPARATION

A. Provide templates and rough-in measurements as required.

3.04 INSTALLATION

A. Install accessories in accordance with manufacturer's installation instructions in locations shown on the Drawings.

B. Install plumb and level, securely and rigidly anchored to structural framing member or solid backing.

C. Secure grab bars to framing members or solid backing securely so as to support 300 lbs. per support without distress or failure.

D. Mounting Heights and Locations: As required by IBC and ICC A117.1 accessibility regulations and as indicated on Drawings.

E. Install painted wood filler around each side of toilet accessories on that portion that extends above the top edge of wainscots and wall tile (as required to fill gap between accessory and wall resulting from wainscot / tile / trim thickness. Wood filler shall be held flush with edge of accessory and be free of gaps or cracks. Paint color shall match color of wall paint.

F. Verify that the accessories that are connected to power are operating correctly.

3.05 FIELD QUALITY CONTROL

A. Contractor Quality Control: Employ / assign quality control personnel to monitor the work of this section for conformance to the requirements of the Contract Documents and to good construction practices.

1. Contractor is solely responsible for managing and controlling the quality of the work and conformance with the requirements of the Contract Documents.

END OF SECTION

SECTION 10 4400

FIRE EXTINGUISHERS AND CABINETS

PART 1 GENERAL

1.01 RELATED DOCUMENTS

A. Drawings and general provisions of the Contract, including General Conditions, Supplementary Conditions and Divisions 00 and 01 Specification Sections, apply to work of this section.

1.02 SECTION INCLUDES

A. Fire Extinguishers.

B. Fire Exinguisher Mounting Brackets.

C. Fire Extinguisher Cabinets.

1. Recessed / Semi-Recessed.

1.03 REFERENCES

A. References shall be the edition current as of the date of the Contract Documents.

B. UL (DIR) - Online Certifications Directory.

C. UL 299 - Dry Chemical Fire Extinguishers.

D. UL 711 - Rating and Fire Testing of Fire Extinguishers.

1.04 SUBMITTALS

A. Refer to Section 01 3300 for submittal procedures.

B. Product Data: Manufacturer's descriptive literature for specified products; indicate compliance to specified requirements.

PART 2 PRODUCTS

2.01 FIRE EXTINGUISHER MANUFACTURERS

A. Manufacturers / Products: Subject to their ability to conform to the requirements of the Drawings and this Specification, the following manufacturers may provide products:

1. Badger Fire Protection, Inc.

2. J.L. Industries, Inc.

3. Kidde Fire Extinguishers.

4. Larsen's Manufacturing Company.

5. Potter-Roemer.

2.02 FIRE EXTINGUISHERS

A. Extinguishers: Dry chemical, multi-purpose, 5-pound capacity.

1. Minimum UL (DIR) Rating: 2A:10B:C.

2. Tested to UL 711 and UL 299 requirements.

3. Extinguisher Finish: Steel, Red Enamel, Factory Finish.

4. Extinguishers shall be fully charged.

B. Mechanical and Electrical Room Extinguishers: Dry chemical, multi-purpose, 10-pound capacity.

1. Minimum UL (DIR) Rating: 4A:80-B:C.

2. Extinguishers shall be fully charged.

3. Mounting: Extinguisher Mounting Bracket.

C. Labels: Attach manufacturer's standard metal foil label to cylinder, with printing and graphics indicating information and instructions required by local authorities having jurisdiction.

2.03 FIRE EXTINGUISHER MOUNTING BRACKET

A. Extinguisher Mounting Bracket: Plated steel bracket for mounting on wall, with quick release metal retaining strap to hold extinguisher securely to bracket.

1. Provide for extinguishers in Mechanical and Electrical Rooms and elsewhere noted on the Drawings.

2.04 FIRE EXTINGUISHER CABINET MANUFACTURERS

A. Manufacturers / Products: Subject to their ability to conform to the requirements of the Drawings and this Specification, the following manufacturers may provide products:

1. J.L. Industries, Inc.

2. Kidde Fire Extinguishers.

3. Larsen's Manufacturing Company.

4. Potter-Roemer.

2.05 FIRE EXTINGUISHER CABINETS

A. Recessed / Semi-Recessed Fire Extinguisher Cabinets: J.L. Industries, Inc., *Academy Series* or similar by one of the approved manufacturers, sized to fit required extinguisher, recessed maximum amount allowed by wall framing.

1. Cabinet: Extruded aluminum, clear anodized finish.

2. Door / Trim: Extruded aluminum, clear anodized finish.

   a. Projection: Flush with face of cabinet.

   b. Configuration: Full lite door with SAF-T-LOK glazing.

   c. Glazing: Clear acrylic.

3. Door Hardware:

   a. Continuous hinge, allowing 180-degree door swing.

   b. Adjustable roller catch.

   c. Handle Pull: Anodized Aluminum.

4. Lettering: Die cut vinyl letters.

   a. Legend: "FIRE EXTINGUISHER".

   b. Lettering Color: White, or as required by Fire Marshal.

   c. Placement: Vertical, on hinge side of door glazing, place on interior side of glazing to be read from exterior side; comply with requirements of authorities having jurisdiction.

5. At Fire-Rated Walls: Provide cabinet that conforms to the requirements of the fire listing for the wall.

PART 3 EXECUTION

3.01 COORDINATION

A. Review, coordinate and accommodate work of other trades that interface with, affect or are affected by the work of this section so as to facilitate the execution of the overall Work of this project in a coordinated and efficient manner.

B. Coordinate openings in walls for cabinets with Section 06 1000.

C. Coordinate backing in walls for extinguisher mounting brackets with Section 06 1000.

3.02 EXAMINATION

A. Verify that wall openings are correct size and in correct locations for recessed / semi-recessed fire extinguisher cabinets.

B. Verify that backing is correctly installed and in the correct locations for extinguisher mounting brackets.

3.03 INSTALLATION

A. Install cabinets securely to wall framing in accordance with manufacturer's instructions and as required by the local Fire Marshal.

1. At Framed Walls: Install recessed or semi-recessed fire extinguisher cabinets. Recess maximum amount allowed by wall framing

B. Install extinguisher mounting bracket for each fire extinguisher that is mounted to the wall with an extinguisher mounting bracket.

C. Install fire extinguishers and cabinets at locations shown on Drawings.

3.04 ADJUSTING

A. Immediately prior to Substantial Completion, ensure extinguishers are fully charged and bear tag recording date of charging and signature of verifying entity.

3.05 PROTECTION

A. Protect exposed finishes of cabinets from damage by subsequent construction activities

B. Repair minor damage to finishes in accordance with manufacturer's recommendations; replace components which cannot be repaired to Owner's satisfaction.

3.06 FIELD QUALITY CONTROL

A. Contractor Quality Control: Employ / assign quality control personnel to monitor the work of this section for conformance to the requirements of the Contract Documents and to good construction practices.

1. Contractor is solely responsible for managing and controlling the quality of the work and conformance with the requirements of the Contract Documents.

END OF SECTION

SECTION 10 8200

ROOFTOP MECHANICAL EQUIPMENT SCREENS

PART 1 GENERAL

1.01 RELATED DOCUMENTS

A. Drawings and general provisions of the Contract, including General Conditions, Supplementary Conditions and Divisions 00 and 01 Specification Sections, apply to work of this section.

1.02 SECTION INCLUDES

A. Rooftop Mechanical Equipment Screens.

1.03 REFERENCES

A. References shall be the edition current as of the date of the Contract Documents.

B. ASCE 7 - Minimum Design Loads and Associated Criteria for Buildings and Other Structures.

C. ASTM B221 - Standard Specification for Aluminum and Aluminum-Alloy Extruded Bars, Rods, Wire, Profiles, and Tubes.

1.04 SYSTEM DESCRIPTION

A. Design Criteria:

1. Manufacturer is responsible for the structural design of materials, assembly and attachments to resist snow, wind, suction and uplift loading at any point without damage or permanent set.

2. Framing shall be designed in accordance with the Aluminum Design Manual to resist the following loading:

a. ASCE 7 – Minimum Design Loads for Buildings and Other Structures; American Society of Civil Engineers.

1.05 SUBMITTALS

A. Refer to Section 01 3300 for submittal procedures.

B. Product Data: Submit manufacturer's catalog data, detail sheets, specification and other data sufficient to indicate compliance with these specifications.

C. Shop Drawings: Indicate layouts heights, component connection details, and details of interface with adjacent construction. Mark data to indicate:

1. Rooftop mechanical equipment to be enclosed.

D. Certification: Manufacturer's Certificate of Compliance certifying that thermoplastic panels supplied meet or exceed requirements specified.

1.06 QUALITY ASSURANCE

A. Regulatory Requirements: Comply with requirements of building authorities having jurisdiction in Project location.

B. Manufacturer Qualifications: Minimum of five (5) years of documented experience producing systems specified in this section.

1.07 PRODUCT DELIVERY, STORAGE AND HANDLING

A. Delivery: Deliver materials to site in manufacturer's original, unopened containers and packaging, with labels clearly indicating manufacturer and material.

B. Storage and Handling: Protect materials and finishes during handling and installation to prevent.

1.08 PROJECT CONDITIONS

A. Field Measurements: Take measurements of actual Rooftop unit for fit without gaps. Indicate measurements on shop drawings fully documenting any field condition that may interfere with the screen system installation.

1.09 WARRANTY

A. If any part of the rooftop equipment screen fails because of a manufacturing defect within one (1) year from the date of Substantial Completion, the manufacturer will furnish without charge the required replacement part(s). Any local transportation, related service labor or diagnostic call charges are included.

B. This warranty does not cover failure of your rooftop equipment screen if it is damaged by the Owner. In no event shall Warrantor be liable for incidental or consequential damages.

PART 2 PRODUCTS

2.01 ROOFTOP MECHANICAL EQUIPMENT SCREENS

A. Manufacturer / Product: CityScapes Incorporated, *Envisor Screening System* is the standard of quality, function, performance and appearance required for this project.

1. CityScapes Incorporated; *Envisor Screening System* (specified, basis of design).

2. Products by other manufacturers may be acceptable, subject to their ability to meet or exceed this standard and provide products conforming with the requirements of the Drawings and Specification.

3. Substitutions: Refer to Section 01 6000 for substitution procedures and requirements. Proposed substitutions must match specified product performance and colors.

B. Materials:

1. Thermoformed plastic Panels: Fabricated from rigid medium impact thermo-formed ABS (Acrylic Butylene 10240 – 2 Styrene) sheets.

   a. Minimum thickness 3/16-inch.

2. Framing: Aluminum Plate, Shapes and Bar: ASTM B221, alloy 6061-T5 or 6063-T5.

3. Threaded Fasteners: Screws, bolts, nut and washers shall be Stainless steel.

   a. Corner assembly fasteners shall be #10-16 x stainless steel TEK screws. Length as required to develop full holding capacity of screw when fastened to Mechanical Equipment.

   b. Provide lock washer or other locking device at bolted connections.

C. Fabrication:

1. Provide factory-formed panel systems with continuous interlocking panel connections and indicated or necessary components: Form components true to shape, accurate in size, square and free from distortion or defects. Cut panels to precise lengths indicated on approved shop drawings.

   a. Panel Style: Verticall.

   b. Panel Design: Louver.

   c. Panel Height: Varies. Verify mechanical unit height and select tallest enclosure that will fit the unit. Verify height with Architect.

2. Trim and Closures: Fabricated from 24 gauge metal, and finished with the manufacturers standard coating system, unless shown otherwise on drawings.

   a. Provide top trim as indicated: Flat.

3. Framing: Fabricate and assemble components in largest practical sizes, for delivery to the site.

   a. Construct corner assemblies to required shape with joints tightly fitted.

b. Supply components required for anchorage of framing. Fabricate anchors and related components of material and finish as required, or as specifically noted.

4. Dimensions and Configurations as shown on the Drawings.

D. Finishes:

1. Aluminum Framing: Mill.

2. Panel Coating: Manufacturer's standard coating system, factory-applied.

a. Colors: _____.

PART 3 EXECUTION

3.01 COORDINATION

A. Review, coordinate and accommodate work of other trades that interface with, affect or are affected by the work of this section so as to facilitate the execution of the overall Work of this project in a coordinated and efficient manner.

B. Coordinate location, layout and type of mechanical unit to receive enclosure with Mechanical Contractor.

3.02 EXAMINATION

A. Installer's Examination: Examine conditions under which construction activities of this section are to be performed.

1. Submit written notification to Architect and Screen manufacturer if such conditions are unacceptable.

2. Beginning installation constitutes installer's acceptance of conditions.

3.03 INSTALLATION

A. Install units in accordance with the manufacturer's instructions and approved shop drawings. Keep perimeter lines straight, plumb, and level. Provide brackets, anchors, and accessories necessary for a complete installation.

B. Fasten structural supports to HVAC units without damaging operation of the unit.

1. Provide corner and mid-span assemblies as required by approved shop drawings so that the panels are supported uniformly.

2. Fastening bottom rail using bolts to permit ease of access to HVAC units.

C. Insert thermoplastic panels into structural supports, except where fixed attachment points are indicated. Butt thermoplastic panels to adjacent panels for uniform fit. Fasten fixed panels in accordance with the shop drawings.

D. Metal Separation: Where aluminum materials would contact dissimilar materials, insert rubber grommets at attachment points, thus eliminating where dissimilar metals would otherwise be in contact.

E. Do not cut or abrade finishes which cannot be restored. Return items with such finishes to shop for required alterations.

3.04 INSTALLATION TOLERANCES

A. Maximum misalignment from true position: 1/4-inch.

3.05 CLEANING AND PROTECTION

A. Remove protective masking from material immediately after installation.

B. Protection:

1. Ensure that finishes and structure of installed systems are not damaged by subsequent construction activities.

2. If minor damage to finishes occurs, repair damage in accordance with manufacturer's recommendations; provide replacement components if repaired finishes are unacceptable to Architect.

C. Prior to Substantial Completion: Remove dust or other foreign matter from component surfaces; clean finishes in accordance with manufacturer's instructions.

D. Clean units in accordance with the manufacturer's instructions.

3.06 FIELD QUALITY CONTROL

A. Contractor Quality Control: Employ / assign quality control personnel to monitor the work of this section for conformance to the requirements of the Contract Documents and to good construction practices.

1. Contractor is solely responsible for managing and controlling the quality of the work and conformance with the requirements of the Contract Documents.

END OF SECTION

SECTION 11 2433

ROOF ANCHORS

PART 1 GENERAL

1.01 RELATED DOCUMENTS

A. Drawings and general provisions of the Contract, including General Conditions, Supplementary Conditions and Divisions 00 and 01 Specification Sections, apply to work of this section.

1.02 SECTION INCLUDES

A. Confirmation of Roof Anchor Layout shown on Drawings.

B. Roof Anchors.

C. Note: Fall protection systems for construction workers building this project are the sole responsibility of the Contractor and are not included in this section.

1.03 SCOPE OF WORK

A. Provide confirmation that the roof anchor layout shown on the Drawings meets the requirements of OSHA / WISHA.

B. Fabricate and install roof anchors that will allow maintenance workers to walk and work safely over the entire area of the roof and provide secure anchorage to arrest a fall by the user, in conformance with applicable Federal, State and local worker safety regulations.

1. System Type: Fall Arrest Fixed Anchors.

1.04 REFERENCES

A. References shall be the edition current as of the date of the Contract Documents.

B. OSHA - Occupational Safety and Health Administration.

C. WISHA - Washington Industrial Safety and Health Act.

1.05 SUBMITTALS

A. Refer to Section 01 3300 for submittal procedures.

B. Product Data: Submit product data on each different anchor type.

C. Shop Drawings: Submit scaled drawings showing complete roof layout, dimensioned anchor locations, details of typical anchor attachment / connection to each different building structural element and condition and other components and accessories.

1. Provide confirmation that the roof anchor layout shown on the Drawings conforms to OSHA / WISHA requirements for a fall arrest, fixed anchor, fall protection system. Provide corrections to the design shown on the Drawings as required and notify the Architect of the revisions.

2. Clearly indicate hardware and installation details.

3. Shop drawings shall show relationship between structural and architectural systems and materials, including connection to these systems.

4. Provide load rating for the fixed roof anchor.

D. As-Built Drawings (submit after anchor installation is complete): Show the as-built anchor locations on a separate 11-inch x 17-inch drawing showing the roof plan.

1. Drawing shall be titled “ROOF ANCHOR LOCATION DRAWING” in bold type at the bottom; each anchor location shall be clearly shown.

1.06 QUALIFICATIONS

A. Manufacturer: Company specializing in the design, fabrication, and installation of roof anchors for fall protection systems and maintenance equipment with a minimum of five (5) years of successful documented experience.

B. Loading and Safety Assurance: Work of this section to meet the requirements of governing codes and jurisdiction and to comply with properly engineered loading and safety criteria for the intended use.

PART 2 PRODUCTS

2.01 MANUFACTURERS

A. Manufacturer / Product: Products by Guardian Fall Protection are the basis of design and the standard of quality, function, performance and appearance required for this project.

1. Guardian Fall Protection (specified, basis of design).

2. Products by the following manufacturers may be acceptable, subject to their ability to meet or exceed this standard and provide products conforming with the requirements of the Drawings and this Specification:

a. Pro Bel.

b. Super Anchor Safety.

3. Substitutions: Comply with Section 01 6000 requirements, proposed substitutions must match specified product and be approved by Architect.

2.02 ROOF ANCHORS – FIXED

A. Roof-Mounted Anchors (Single Ply Roofing Applications):

1. 12-inches High:

a. Manufacturer / Product: Guardian Fall Protection; *CB-12 Anchor Point.*

2. 18-inches High:

a. Manufacturer / Product: Guardian Fall Protection; *CB-18 Anchor Point.*

3. Anchor Height: Contractor shall select the correct anchor height as required for a minimum 8-inch exposed height above surface of finished roof.

B. Anchor Load Rating: 5,000 lbs. minimum.

C. Material: Hot dipped galvanized steel.

D. Attachment to Roof Structure: Refer to Structural Drawings.

1. Fasteners: Provide hot-dipped galvanized machine bolts, washers and nuts of size and type recommended by anchor manufacturer to achieve the rated load capacity of the anchor.

E. Connection to Building Structure: Attach to roof structure as shown on Drawings to meet the requirements herein. Design the connection of the fall protection anchors to the building structure to resist the design loads required by OSHA and WISHA without overstressing any part of the system components or the structure beyond allowable values.

F. Quantity: Refer to Drawings.

PART 3 EXECUTION

3.01 COORDINATION

A. Review, coordinate and accommodate work of other trades that interface with, affect or are affected by the work of this section so as to facilitate the execution of the overall Work of this project in a coordinated and efficient manner.

B. Coordinate installation of anchors with other sections affected by anchor installation for proper coordination and for watertight assembly.

C. Coordinate installation of roof anchors with the work of Section 06 1000, Section 06 1800, and Section 07 4000 to assure proper relationship of anchors to support structure and to allow for proper coordination and watertight assembly.

D. Coordinate structural backing for anchors.

E. Coordinate installation of anchors with roofing installation.

F. Provide advice and assistance with respect to construction of work by other trades related to specific requirements for the products specified in this section.

3.02 EXAMINATION

A. Inspect and field verify building structure and job conditions before starting installation work for conformance to requirements of anchor installation design.

B. Start of installation indicates installer's acceptance of the building structure at each anchor connection point and of the job conditions. Faults occurring in the work completed under this section due to incorrect work by others will be corrected at no cost to the Owner.

3.03 INSTALLATION

A. Install roof anchors in accordance with the manufacturer's installation instructions and conforming to OSHA / WISHA requirements and this section.

1. Attach anchors securely to building structural members / backing in accordance with manufacturer's design to achieve the full design load of the anchor.

2. Protect building structural members from damage during installation.

B. Anchors shall be installed in a straight line and square with building lines.

C. Install anchorage and mounting devices required for the installation of each product.

D. Coordinate installation of anchors and sequence of work with installation of roofing installed by other trades; completed installation shall be completely watertight.

3.04 FINAL INSPECTION

A. Verify that all work done under this section has been completed correctly and that all installed products function properly. Adjust items where necessary to ensure satisfactory operation.

3.05 CLEANING

A. Remove loose materials, crating and packing material from the roof and project site.

3.06 FIELD QUALITY CONTROL

A. Contractor Quality Control: Employ / assign quality control personnel to monitor the work of this section for conformance to the requirements of the Contract Documents and to good construction practices.

1. Contractor is solely responsible for managing and controlling the quality of the work and conformance with the requirements of the Contract Documents.

END OF SECTION

SECTION 12 1013

EXPERIENTIAL GRAPHIC DESIGN (EGD)

PART 1 GENERAL

1.01 RELATED DOCUMENTS

A. Drawings and general provisions of the Contract, including General Conditions, Supplementary Conditions and Divisions 00 and 01 Specification Sections, apply to work of this section.

1.02 SECTION INCLUDES

A. Experiential Graphic Design (EGD) Elements.

1.03 EXPERIENTIAL GRAPHIC DESIGN (EGD) SCHEDULE

A. EGD-_____ – _____.

1.04 SCOPE OF WORK

A. The work of this section shall be performed by company regularly engaged in the design, fabrication and installation of graphic design elements similar to the EGD types shown on the Drawings.

1. Coordinate, direct and control the work of any subcontractors, suppliers or fabricators providing fabrication and / or installation of the various EGD types shown on the Drawings.

B. EGD types shown on the Drawings are schematic level indicating the design intent only; provide EGD design on the shop drawings showing the fabrication and installation details required for complete and functional EGD elements that conform to the design intent.

C. Field verify site conditions and dimensions affecting EGD installation and coordinate with EGD fabrication and installation.

D. EGD fabricator is responsible for preparing final digital files required for custom printed graphics, cut vinyl film graphics, and computer controlled CNC equipment that are scaled to the as-built dimensions of the building at each EGD fabrication location.

E. Coordinate the EGD design and fabrication to match appearance of adjacent work specified in other sections to match (materials, size, color, details, etc.).

F. Fabricate EGD types in accordance with the shop drawings and review comments by the Architect.

G. Install EGD types in locations shown on the Drawings.

1.05 SUBMITTALS

A. Refer to Section 01 3300 for submittal procedures.

B. Product Data: Provide manufacturer's product information for each material specified.

C. Shop Drawings: Submit shop drawings of all EGD components, fittings, parts, and installation procedures showing layout, jointing and complete anchoring and support systems for the various applications and mounting details. Drawings shall indicate size, thickness and finishes of materials and shall include methods of attachment. Provide details and sections at full size. Differences from the drawings in this section shall be clearly identified. Coordinate attachments with substrate and surrounding materials and products.

D. Samples:

1. Submit color and material samples of actual materials to be used for all exposed trim, connections, closures, etc.

2. Fabricator shall do all file manipulations of the submitted digital artwork to achieve color matches per approved color palettes.

1.06 QUALITY ASSURANCE

A. Fabricator Qualifications: Company regularly engaged in fabrication and digital printing of environmental graphic panels of the type and complexity specified in this section, and that employ skilled workers who custom fabricate products similar to those required for this project and whose products have a record of successful in-service performance.

1.07 FIELD CONDITIONS

A. Field verify / measure dimensions and review site conditions prior to submitting shop drawings.

B. Coordinate signage work with Contract Drawings, change directives and as-built conditions.

1.08 DELIVERY, STORAGE AND HANDLING

A. Store products indoors and protect from moisture, construction traffic, and damage.

1.09 WARRANTY

A. Warranty EGD systems and components to be free of material, fabrication and installation defects that would adversely affect its function or appearance for a period of five (5) years.

B. Defective materials and workmanship include, but are not limited to, the following: Delaminating of parts or finishes, cupping, warping or dishing of surfaces, bubbling, crazing, chalking, or fading of finishes, rusting or corrosion of parts, installations that are not plumb or securely fastened, use of incorrect finishes or materials, or unapproved deviations from the Contract Documents or approved shop drawings.

PART 2 PRODUCTS

2.01 FABRICATORS

A. EGD Fabricators: The following fabricators are acceptable for this project:

1. Doty and Associates; phone: (206) 441-9301.

2. Industry Sign and Graphics; phone: (253) 854-2333.

3. Image Mill; phone: (425) 861-8651.

2.02 MATERIALS

2.03 FABRICATION – GENERAL

A. General: Fabricate EGD elements from new materials using the best fabrication procedures, practices and workmanship that is common to the graphics and sign industry.

1. Field verify dimensions and conditions on project site for each EGD fabrication prior to starting fabrication work.

2. EGD fabricator is responsible for preparing final digital files required for custom printed graphics, cut vinyl film and computer controlled CNC equipment that are scaled to the as-built dimensions of the building at each EGD fabrication location.

B. There shall be no visible labels, manufacturer's or otherwise, code permitting, on the completed EGD elements. If labels are required, a sample label and intended location must be included with submittal for Architect's review.

2.04 EGD FABRICATIONS

A. EGD-_____ – _____.

PART 3 EXECUTION

3.01 COORDINATION

A. Review, coordinate and accommodate work of other trades that interface with, affect or are affected by the work of this section so as to facilitate the execution of the overall work of this project in a coordinated and efficient manner.

B. Coordinate backing required for attachment of EGD elements with Section 06 1000, Section 05 4000, and Section 09 2216.

3.02 EXAMINATION

A. Examine the substrate and conditions under which the EGD work of this section is to be installed and verify that all such work is complete for proper installation. Installer shall notify General Contractor of unsatisfactory conditions; installer shall not proceed until unsatisfactory conditions are corrected.

B. Install EGD elements and components at the locations shown or scheduled, securely mounted. Verify clearance, anchorage methods and final location for before installation.

C. Install EGD work after wall and ceiling surfaces are painted and finished.

3.03 INSTALLATION - GENERAL

A. Install EGD elements and components in locations noted on the EGD Drawings.

B. Installation shall be performed by personnel experienced in EGD installation work.

C. Install level, plumb and at the proper height as shown on the EGD Drawings with EGD surfaces free from defects.

D. Cooperate with other trades for installation of EGD units to finish surfaces.

3.04 INSTALLATION - EXPERIENTIAL GRAPHIC DESIGNS

3.05 PROTECTION OF WORK

A. Package to prevent damage or deterioration during shipment, handling, storage and installation. Products should remain in original packaging until removal is necessary. Store products in a dry, indoor location.

B. Provide protection of EGD elements during construction. Repair finishes and surrounding architectural surfaces damaged by field installation. Restore finishes so there is no evidence of corrective work. Return items which cannot be refinished in the field to the shop, make required alterations, and refinish the entire unit or provide new unit at fabricator's option.

3.06 FIELD QUALITY CONTROL

A. Contractor Quality Control: Employ / assign quality control personnel to monitor the work of this section for conformance to the requirements of the Contract Documents and to good construction practices.

1. Contractor is solely responsible for managing and controlling the quality of the work and conformance with the requirements of the Contract Documents.

3.07 EGD DESIGNS AND LOCATION PLAN – REFER TO DRAWINGS

END OF SECTION

SECTION 12 3662

SOLID SURFACE COUNTERTOPS

PART 1 GENERAL

1.01 RELATED DOCUMENTS

A. Drawings and general provisions of the Contract, including General Conditions, Supplementary Conditions and Divisions 00 and 01 Specification Sections, apply to work of this section.

1.02 SECTION INCLUDES

A. Solid Surface Countertops.

1.03 PERFORMANCE CRITERIA

A. Structural Requirements: Design and fabricate countertop assembly and the supporting substructure to support 300-pound concentrated load applied at any point without overstressing any part of the assembly, failure of the assembly or deflection of countertop front edge.

B. Accessibility Requirements: Installation shall conform to accessibility requirements of ADA Standards and ICC A117.1.

1.04 REFERENCES

A. References shall be the edition current as of the date of the Contract Documents.

B. ADA Standards - 2010 ADA Standards for Accessible Design.

C. ANSI Z124.3 - Plastic Lavatories.

D. ANSI Z124.6 - Plastic Sinks.

E. APA - The Engineered Wood Association.

F. ASTM C920 - Standard Specification for Elastomeric Joint Sealants.

G. ASTM E84 - Standard Test Method for Surface Burning Characteristics of Building Materials.

H. ICC A117.1 - Accessible and Usable Buildings and Facilities.

I. UL 723 - Standard for Test for Surface Burning Characteristics of Building Materials.

1.05 SUBMITTALS

A. Refer to Section 01 3300 for submittal procedures.

B. Product Data: Submit manufacturer's literature for each product specified.

C. Shop Drawings: Show location of each item, dimensioned plans and elevations, large-scale details, attachment devices and other components.

1. Show full-size details, edge details, thermoforming requirements, attachments, etc.

2. Show locations and sizes of backing specified in other sections.

3. Show locations of required supports and seams.

4. Counter-Mounted Items (Sinks, appliances, etc.): Show location and size of cutouts for all counter-mounted items, including reinforcing and special requirements. Coordinate rough-in requirements and cut-out dimensions required to accommodate counter-mounted items with trade responsible.

5. Coordinate required dimensions, cutout sizes and rough-in requirements with Owner or trade responsible prior to submission.

D. Samples: Submit one (1) 6-inch by 6-inch sample of each color / pattern specified in specified gloss.

E. Maintenance Data: Submit manufacturer's care and maintenance data, including repair and cleaning instructions.

1.06 QUALITY ASSURANCE

A. Fabricator / Installer Qualifications: Shop that employs skilled workers who custom fabricate products similar to those required for this project and whose products have a record of successful in-service performance.

B. Flammability Tests: Solid surfacing products shall conform to Class A (Class I) surface burning characteristics as determined by testing identical products per UL 723 (ASTM E84) or another testing and inspecting agency acceptable to authorities having jurisdiction:

1. Flame Spread Index: 25 or less.

2. Smoke Developed Index: 450 or less.

1.07 DELIVERY, STORAGE AND HANDLING

A. Deliver no components to project site until areas are ready for installation.

B. Store components indoors prior to installation.

C. Handle materials to prevent damage to finished surfaces.

1. Provide protective coverings to prevent physical damage or staining following installation for duration of project.

PART 2 PRODUCTS

2.01 SOLID SURFACE COUNTERTOPS, SIDESPLASHES, BACKSPLASHES, AND INTEGRAL SINKS

A. Manufacturer / Product: Formica, *Solid Surface* is the basis of design and the standard of quality, function, performance and appearance required for this project.

1. Formica; *Solid Surface* (specified, basis of design).

2. Products by the following manufacturers may be acceptable, subject to their ability to meet or exceed this standard and provide products conforming with the requirements of the Drawings and this Specification:

a. DuPont; *Corian Solid Surface.*

b. Krion; *Natural Lux.*

c. Wilsonart; *Solid Surface.*

d. Willoughby; *Aquasurf.*

3. Substitutions: Comply with Section 01 6000 requirements, proposed substitutions must match specified product, selected colors and be approved by Architect.

B. Solid Surface Countertop, Sidesplash, Backsplash, and Sink Materials: Cast, nonporous, filled polymer, not coated, laminated or of composite construction with through body colors meeting ANSI Z124.3 or ANSI Z124.6, having minimum physical and performance properties noted in manufacturer's published product description.

1. Superficial damage to a depth of 0.010-inch shall be repairable by sanding and / or polishing.

C. Thickness: 1/2-inch, thicker where required for function or fabrication.

D. Colors: _____.

E. Accessories:

1. Joint Adhesive: Manufacturer's standard one- or two-part adhesive kit to create inconspicuous, nonporous joints.

2. Construction Adhesive: Solid Surface manufacturer's recommended silicone-based construction adhesive for backsplashes, sidesplashes, and other applications according to manufacturer's published fabrication and installation instructions.

3. Elastomeric Sealant: Sealant approved by solid surface manufacturer, mildew-resistant silicone sealant for filling gaps between countertops and terminating substrates in wet environment applications. Complies with ASTM C920, Type S (single component), Grade NS (nonsag). Match color of solid surface.

4. Sink / Lavatory Mounting Hardware: Manufacturer's standard bowl clips, panel inserts and fasteners for attachment of undermount sinks / lavatories.

5. Support Substructure and Ledgers for Wall-Mounted Counters: Provide substructure and wall ledgers capable of supporting countertop under a 300 pound load without failure or deflection; substructure shall be 3/4-inch exterior grade APA rated B-C sanded Fir plywood and Fir lumber (minimum).

2.02 SHOP FABRICATION

A. Coordinate and confirm field dimensions and conditions affecting work prior to start of fabrication.

1. Countertops Supported on Ledgers: Coordinate dimensions and required supports for countertop.

B. Shop assemble work in largest sections possible that will fit through building openings.

C. Fabricate components to greatest extent practical to sizes and shapes indicated on Drawings, in accordance with approved shop drawings and manufacturer's printed instructions and technical bulletins.

D. Countertops, Sidesplashes, Backsplashes, and Integral Sinks:

1. Countertops:

a. Fabricate countertop assembly and the supporting substructure to support 300 pound load applied at any point without failure of the assembly or deflection of countertop front edge exceeding 1/8-inch.

b. Provide solid surface sheets in the largest sizes available and lay out for minimum number of joints.

c. Form joints between components using manufacturer's standard joint adhesive without conspicuous joints.

1) Reinforce with strip of solid polymer material, 2-inch wide.

d. Countertop Thickness: 1/2-inch.

e. Countertop Front Edge Treatment: Square, build up to 1-1/2-inch thickness, with 1/8-inch radius edges.

2. Provide cutouts for plumbing fittings and accessories using manufacturer's templates.

E. Rout and finish component edges with clean, sharp returns.

1. Rout cutouts, radii and contours to template.

2. Smooth edges.

3. Repair or reject defective and inaccurate work.

2.03 FINISHES

A. Finish: Matte; gloss range of 5–20.

1. Provide surfaces with a uniform finish.

PART 3 EXECUTION

3.01 COORDINATION

A. Review, coordinate and accommodate work of other trades that interface with, affect or are affected by the work of this section so as to facilitate the execution of the overall Work of this project in a coordinated and efficient manner.

B. Coordinate the location and layout of backing required with Section 06 1000.

C. Coordinate the installation of plumbing fixtures, fittings and other counter-mounted items with installer responsible for their installation.

3.02 EXAMINATION

A. Examine substrates and conditions for compliance with requirements for installation tolerances and other conditions affecting performance of work.

B. Verify that substrate(s) supporting counters are level, and flat to within 1/16-inch in 10 feet, and that all necessary supports are in place, secure and conform to Performance Requirements specified herein.

C. Do not proceed with installation until any unsatisfactory conditions have been corrected.

D. Start of installation indicates acceptance of substrates and conditions.

3.03 INSTALLATION – COUNTERTOPS

A. Install countertops level and rigid, scribed to adjacent finishes, in accordance with manufacturer's installation instructions and approved shop drawings and product data.

1. Accessibility Requirements: Conform to ADA Standards and ICC A117.1 accessibility regulations and as indicated on Drawings.

B. Install countertop assembly and the supporting substructure to conform with Performance Requirements specified herein.

C. Anchor securely to wall mounted supports in concealed location.

D. Align adjacent countertop sections flush and form joints to comply with manufacturer's written recommendations using joint adhesive.

1. Exposed joints / seams shall not be allowed.

2. Securely join sections with manufacturer's recommended adhesive in color to match countertop. Joints shall be 100% watertight.

3. Fill joints flush with surface of countertop for inconspicuous appearance.

4. Reinforce field joints with solid surface strips extending a minimum of 1-inch on either side of the seam with the strip being the same thickness as the top.

5. Clamp or brace solid surface pieces in position until adhesive sets.

E. Cut and finish component edges with clean, sharp returns.

F. Cut out countertops for fixtures, appliances and fittings using templates and as required for installation of attachment clips on sinks, appliances and fittings, reinforce countertop unit if weakened by cutout.

G. Carefully dress joints smooth, remove surface scratches and clean entire surface.

H. Fully support countertops so there is no sag, bow or other variation from a straight line.

3.04 REPAIR

A. Repair or replace damaged work which cannot be repaired to Architect's satisfaction.

3.05 CLEANING AND PROTECTION

A. Keep components clean during installation.

B. Remove adhesives, sealants and other stains.

C. Protect surfaces from damage until Owner acceptance of project.

3.06 WORKMANSHIP

A. Countertop installation shall be installed using the best workmanship, including the following:

1. No damage to exposed to view finished surfaces.

2. Countertops scribed tight to adjacent surfaces.

3. Countertops securely attached to base cabinet or other supports.

4. Accurate cut-outs for plumbing pipes and electrical devices / conduit in countertop.

5. Countertops properly supported and installed level and secured in place.

6. Countertop joints tightly fitted and flush.

7. No exposed fasteners.

B. Countertops installed with improper or poor workmanship shall be removed and replaced at Contractor's expense.

3.07 FIELD QUALITY CONTROL

A. Contractor Quality Control: Employ / assign quality control personnel to monitor the work of this section for conformance to the requirements of the Contract Documents and to good construction practices.

1. Contractor is solely responsible for managing and controlling the quality of the work and conformance with the requirements of the Contract Documents.

END OF SECTION

SECTION 14 2426

HOLELESS HYDRAULIC PASSENGER ELEVATOR

PART 1 GENERAL

1.01 RELATED DOCUMENTS

A. Drawings and general provisions of the Contract, including General Conditions, Supplementary Conditions and Divisions 00 and 01 Specification Sections, apply to work of this section.

1.02 SECTION INCLUDES

A. Holeless Hydraulic Elevator.

1.03 DESIGN REQUIREMENTS

A. Design and engineer complete operating hydraulic elevator to accommodate the layout, configuration and building structure shown on the Drawings, including but not limited to:

1. Connection to building structure.

2. Conformance to all applicable Codes and Regulations, including:

a. ADA Standards.

b. ASME A17.1 – Safety Code for Elevators and Escalators.

c. ASME A17.6 – Standard for Elevator Suspension, Compensation, and Governor Systems.

d. ASME A17.7 – Safety Code for Elevators and Escalators.

e. International Building Code (IBC).

f. NFPA 70 – National Electrical Code.

g. NFPA 80 – Standard for Fire Doors and Windows.

h. NFPA 5000 – Chapter 54 Building Construction and Safety Code.

i. RCW 70.87 - Elevators, Lifting Devices, And Moving Walks, Revised Code of Washington.

j. Uniform Federal Accessibility Standards (UFAS).

k. UFC 3-600-01 – 6 Design: Fire Protection Engineering For Facilities.

l. UL 10B – Fire Tests of Door Assemblies.

m. State of Washington WAC 296-96 - Rules governing passenger elevators for the handicapped.

3. Comply with requirements of the Washington State Elevator Inspector.

4. Miscellaneous materials and accessories required to provide complete installation and fully operable elevators.

5. Engineering and installation shall be sufficient to obtain approval and certification of the complete installation by the governing agency(s) and authority(s) having jurisdiction. Provide additional equipment and / or features required by governing agencies whether specified or not. In case of conflict between these specifications and applicable codes or governmental requirements the more restrictive requirement shall apply.

1.04 REFERENCES

A. References shall be the edition current as of the date of the Contract Documents.

B. ADA Standards - 2010 ADA Standards for Accessible Design.

C. APA - The Engineered Wood Association.

D. ASME A17.1 - Safety Code for Elevators and Escalators Includes Requirements for Elevators, Escalators, Dumbwaiters, Moving Walks, Material Lifts, and Dumbwaiters with Automatic Transfer Devices.

E. ASME A17.6 - Standard for Elevator Suspension, Compensation, and Governor Systems.

F. ASME A17.7 - Performance-Based Safety Code for Elevators and Escalators.

G. ASTM A653/A653M - Standard Specification for Steel Sheet, Zinc-Coated (Galvanized) or Zinc-Iron Alloy-Coated (Galvannealed) by the Hot-Dip Process.

H. ASTM A1008/A1008M - Standard Specification for Steel, Sheet, Cold-Rolled, Carbon, Structural, High-Strength Low-Alloy, High-Strength Low-Alloy with Improved Formability, Required Hardness, Solution Hardened, and Bake Hardenable.

I. ASTM B221 - Standard Specification for Aluminum and Aluminum-Alloy Extruded Bars, Rods, Wire, Profiles, and Tubes.

J. IBC - International Building Code.

K. MIL-L-19140 - Lumber and Plywood, Fire-Retardant Treated.

L. NFPA 70 - National Electrical Code.

M. NFPA 80 - Standard for Fire Doors and Other Opening Protectives.

N. NFPA 5000 - Building Construction and Safety Code.

O. PS 1 - Structural Plywood.

P. RCW 70.87 - Elevators, Lifting Devices, And Moving Walks, Revised Code of Washington.

Q. UFAS - Uniform Federal Accessibility Standards.

R. UFC 3-600-01 - Fire Protection Engineering For Facilities, With Change 6.

S. UL 10B - Standard for Fire Tests of Door Assemblies.

T. WAC 296-96 - Safety Regulations and Fees for All Elevators, Dumbwaiters, Escalators and other Conveyances.

1.05 SUBMITTALS

A. Refer to Section 01 3300 for submittal procedures.

B. Product Data: Submit manufacturer's product data for elevator system proposed for use; include the following information:

1. Signal and operating fixtures, operating panels and indicators.

2. Cab design, dimensions and layout.

3. Hoistway-door and frame details.

4. Electrical characteristics and connection requirements.

5. Expected heat dissipation of elevator equipment in hoistway (BTU).

C. Shop Drawings: Provide drawings showing the layout of the elevator car, shaft and machine room; include the following information:

1. Car, guide rails, buffers and other components in hoistway.

2. Maximum rail bracket spacing.

3. Maximum loads imposed on guide rails requiring load transfer to building structure.

4. Clearances and travel of car.

5. Clear inside hoistway and pit dimensions.

6. Location and sizes of access doors, hoistway entrances and frames.

D. Deferred Submittal to Washington State Department of Labor and Industries:

1. Submit two (2) copies each of product data and shop drawings including hoistway and machine room to Washington State Department of Labor and Industries for review and approval as a deferred submittal. Make any corrections and provide any additional information required to obtain approval by Labor and Industries Elevator Inspector.

E. Samples: Submit two (2) samples of each finish material required for cars and finish of hoistway entrances and doors. If floor finish is submitted in a separate flooring submittal, no flooring samples are required.

F. Operations and Maintenance Manuals: Provide manufacturer's standard operations and maintenance manual.

1.06 DELIVERY AND STORAGE

A. Deliver items and materials to site when area and construction sequence is ready for installation.

B. Store materials in a storage area allotted. Prevent deterioration or damage to equipment and materials.

C. Wrap and crate factory finished materials in manner to protect their finishes. Fully protect moveable and operating equipment from weather.

1.07 WARRANTY

A. Warranty the Elevator System for a period of one (1) year against any failures in elevator system. Failures are defined to include faulty workmanship, excessive wear, operation system or control system failures, sub-standard performance, excessive noise or vibration, and similar unsafe or unsatisfactory conditions. Damage or failures due to abuse, misuse, or vandalism shall be excluded from the warranty.

1.08 MAINTENANCE

A. Full Maintenance Service: Provide complete maintenance service by installer, including standard monthly preventive maintenance. Repair or replace worn equipment, and include normal lubrication, cleaning, and adjustment as recommended by manufacturer of elevator system components.

B. Include complete emergency service, on an around-the-clock basis every day.

C. Initial maintenance period is one (1) year, starting on date of substantial completion concurrent with the one (1) year materials and installation warranty.

D. Maintenance Service:

1. Include systematic examination, adjustment and lubrication of elevator equipment, repair or replace worn electrical and mechanical parts of the elevator equipment using only genuine standard parts produced by manufacturer of equipment.

2. Replace seals, packing, and valves to maintain required safe operation.

3. Ensure that competent personnel handle maintenance service. Maintain local supply of parts for scheduled replacement or emergency purposes. Have qualified personnel available to ensure timely response for service.

PART 2 PRODUCTS

2.01 MANUFACTURER

A. Manufacturer / Product: Thyssen Krupp, *Endura A Twinpost Above-Ground* is the basis of design and the standard of quality, function, performance and appearance required for this project. The following manufacturers are acceptable subject to their ability to provide products conforming to this standard:

1. Kone.

2. Otis Elevator Corporation.

3. Thyssen Krupp; *Endura A Twinpost Above-Ground* (specified, basis of design).

4. Substitutions: Refer to Section 01 6000 for substitution procedures and requirements. Proposed substitutions must match specified product performance.

B. Building Design Differences Between Manufacturers: The design shown on the Drawings for the elevator hoistway, machine room and electrical power are based on the requirements of the specified elevator manufacturer.

1. Any modifications to the elevator hoistway, machine room and electrical power required to accommodate other manufacturer's elevator system that differ from the specified elevator manufacturer shall be included in the Contract Work and not result in any change in the Contract amount.

2.02 ELEVATOR

A. The work of this section includes complete and operational hydraulic elevator, including motors, pumps and controllers at machine room.

B. Hydraulic Cylinder: Twinpost holeless.

C. Elevator Type: Passenger.

1. Quantity of Elevators: One (1).

2. Net Capacity: 4,000 lbs.

3. Speed: 110 feet per minute (fpm).

4. Clear Cab Height: 7 foot, 4-inches.

5. Cab Size (Clear Inside): 7 foot, 8-inches wide by 5 foot, 5-inches deep.

6. No. of Openings in Cab: One (1).

7. Actual Travel Distance: Refer to Drawings and verify in field.

8. Number of Stops: Two (2).

9. Elevator Stop Designations: 1 and 2.

D. Car Enclosure:

1. Canopy Construction: Reinforced cold-rolled steel with hinged exit; two (2) coats factory applied reflective baked enamel.

2. Ceiling: Stainless steel panels (sheet metal or laminate) with No. 4 brushed finish, with round low voltage downlights.

a. Frame Finish: Stainless steel, No. 4 brushed finish.

b. Panel Finish: Stainless steel, No. 4 brushed finish.

3. Wall Construction: Reinforced cold-rolled steel; two (2) coats factory applied baked enamel.

a. Finish Interior Panels: Plastic Laminate Panels.

1) Color: _____.

4. Cab Columns, Front and Transom: Provide panels faced with brushed stainless steel.

5. Base: Stainless steel, No. 4 brushed finish.

6. Floor: _____.

7. Handrails: 1-1/2-inch round tubular stainless steel metal, at both sides and rear.

8. Emergency Car Light: Battery Operated.

9. Ventilation: Two (2) speed exhaust fan mounted on the car top; key switch.

E. Door Operation: One Speed, Center Opening, Double Leaf.

F. Car Door:

1. Doors: Stainless steel, No. 4 brushed finish.

2. Car Return: Stainless steel, No. 4 brushed finish.

3. Opening Size: 4 foot wide x 7 foot high.

G. Hoistway:

1. Doors: Stainless steel, No. 4 brushed finish.

2. Frames: Stainless steel, No. 4 brushed finish.

3. Entrance Opening Size: 4 foot wide x 7 foot high.

H. Required Equipment / Machinery Options:

1. Solid State Starting: Provide an electronic reduced voltage starter featuring adjustable starting currents.

2. Electric Motor and Controls Protection Circuitry: Protect motor and control circuitry from damage resulting from voltage spikes, reversed, crossed or disconnected phase wires and overheating due to under or low voltage.

3. Muffler.

4. Sound isolation features including:

a. Vibration Isolation mounting pads under power unit.

b. Sound insulating panels on power unit.

c. Sound isolation couplings on oil piping between power unit and jack.

I. Hydraulic Motor and Pump Location: In elevator machine room, refer to Drawings.

J. Elevator Operation:

1. Simplex Operation.

2. Independent operation with key lock to remove car from normal hall button calls.

3. Standard pushbutton.

4. Home landing shall be: First Floor.

K. Fire Emergency Service:

1. Elevator operation shall comply with most recent requirements of ASME and the local authority having jurisdiction.

2. If smoke or heat sensing devices are wired to the elevator system to initiate the foregoing operation, install three (3) position key switch, third position to override automatic initiation by a sensing device.

L. Provide "Firefighter's Operation" in accordance with applicable code(s).

1. Designated Landings: First Floor.

2. Provide Phase 1 Recall.

M. Emergency Operation During Power Failure: In the event of power failure, elevator cab light shall turn on under battery power and elevator cab shall slowly descend to the lowest floor and stand with doors open until power is restored. All normal elevator functions except battery powered light and phone shall be inoperable until power is restored.

1. Battery shall include a charging circuit connected to the electrical power to keep battery fully charged at all times.

2. Include labeled LED warning light on cab control wall indicating low or dead battery condition.

2.03 MATERIALS

A. Rolled Steel Sections, Shapes, Rods: ASTM A1008/A1008M.

B. Sheet Steel: ASTM A653/A653M, G90 Coating designation, stretcher leveled commercial grade.

C. Stainless Steel: Type 302 / 304, No. 4 brushed finish.

D. Aluminum: ASTM B221 extruded alloy; enameling quality.

E. Plywood: Softwood Plywood: NIST PS 1, APA stamped, exterior grade, five ply, sanded "A" or “B” face on exposed surfaces to receive laminate finish material, "C" face on concealed surfaces.

1. Fire-Retardant Treatment: Conform to MIL-L-19140 fire-retardant treated.

a. Comply with requirements of ASME A17.1.

2.04 OPERATING EQUIPMENT

A. Provide all operating equipment required for fully functional elevators including: motors, pumps, microprocessor controllers, hydraulic fluid reservoir, cylinder, plunger cylinder, piping, guide rails, buffers, buttons, wiring, indicators, door control features and hardware and fittings to provide a fully operational elevator.

2.05 POWER CHARACTERISTICS

A. Elevator Apparatus: Coordinate with Division 26 contractor.

B. Lighting: 120 volt, AC, 60 Hz.

C. Coordinate and confirm power requirements to various equipment.

2.06 CONTROLS

A. Provide the controls that are provided standard with the elevator model / package specified and the following (if not included as standard):

B. Hall Call Stations: Provide illuminated pushbuttons.

C. Car Control Stations: Manufacturer's standard stainless steel faceplate-mounted type with the following minimum features:

1. Illuminated call button for each landing served.

2. Door open button.

3. Door close button.

4. Emergency stop switch.

5. Alarm button.

6. Car Position Indicators: Display to show direction of car travel and present or next landing.

7. Telephone (instrument specified elsewhere): Provide cabinet with magnetic or friction latch.

8. Key operated fan switch.

9. Key operated light switch.

10. Key operated elevator operation switch.

11. Key operated fire fighter's control. With engraved bezels.

12. Battery condition LED light.

D. Door Operation:

1. Provide manufacturer’s standard electronic operation for door closing protection.

2. Program door control to open doors automatically when car arrives at floor.

3. If doors are prevented from closing for approximately ten seconds because of an obstruction, automatically disconnect door reopening devices, close doors more slowly until obstruction is cleared. Sound buzzer.

4. Door Safety Devices: Infra-red multi-beam array.

2.07 ACCESSORIES

A. Telephone: Provide operational telephone in recessed cabinet in car with telephone wires included in elevator cab traveling cable and connection point for telephone in machine room. Telephone and intercom per code requirements.

B. License Holder: Furnish stainless steel license holders in each elevator car sized to suit license issued; with concealed tamper-proof fastenings.

C. Signage: Provide code required elevator signage, including sign that reads: “IN CASE OF FIRE, ELEVATORS ARE OUT OF SERVICE. USE EXIT STAIRS.” Locate adjacent to elevator call stations at each floor level.

2.08 METAL FINISHES

A. Primer: Shop coat zinc oxide alkyd.

B. Galvanizing: ASTM A653/A653M, G90 coating designation.

C. Enamel: Shop applied baked enamel.

1. Colors: _____.

D. Stainless Steel: No. 4 brushed finish.

2.09 FABRICATION

A. Machine: A.C. type specifically designed for elevator service having motor, pump, tank valves and muffler mounted and aligned on steel bed plate.

B. Cylinder / Plunger: Machined polished steel tube having internal couplings where jointed, welded stop on bottom, sliding in high strength steel pipe cylinder having closed bottom and stuffing box with packing gland at top and all necessary piping connections.

C. Car: Sheet steel enclosure with structural steel frame and bracing, 3/4-inch fire-retardant treated plywood floor and wall cladding fastened with hidden mechanical fasteners. Power operated hollow steel doors with track, rollers and frame.

D. Car Finish: Baked enamel base color as selected from manufacturer's standard finish.

E. Hoistway Entrances: 1-1/2 hr. fire rating. Verify jamb depths required at each door opening and provide frame depth, which accommodates full depth of hoistway wall.

2.10 FINISHING

A. Non-Exposed to View Surfaces:

1. Structural and Non-Exposed Ferrous Metal Surfaces: Free surfaces of rust, oil or grease, clean with solvent, prime with two (2) coats structural steel grade primer.

2. Field Welds: Chip and clean away oxidation, flux or residue, wire brush clean, apply two (2) coats of primer.

B. Exposed to View Surfaces (In Car, Machine Room and Hoistway Entrances):

1. Stainless Steel: Type 302 / 304, No. 4 brushed finish.

2. Baked Enamel: Clean, degrease zinc coated metal surface, one (1) coat of zinc oxide primer sprayed and baked, two (2) coats of semi-gloss enamel sprayed and baked.

C. Flooring: Installed by Section 09 6800.

2.11 HOIST BEAM

A. If elevator installer requires a hoist beam at top of shaft for installation of equipment, provide beam of required size and material and coordinate installation. Installation of beam shall be included in the bid price for the project.

PART 3 EXECUTION

3.01 COORDINATION

A. Review, coordinate and accommodate work of other trades that interface with, affect or are affected by the work of this section so as to facilitate the execution of the overall Work of this project in a coordinated and efficient manner.

B. Coordinate installation of additional hoistway structural framing members to accommodate attachment of rails and equipment.

C. Coordinate electrical power requirements and layout of electrical service for elevator with Division 26.

D. Coordinate construction of shaft walls to achieve construction and interface at elevator door frame that maintains the fire-rated listing requirements for the frame.

E. Coordinate installation of structural support angles / channels required to support sills at doors.

F. Coordinate the requirements and connections required in the machine room for the emergency telephone installed in the elevator cab.

G. Coordinate the installation of the hydraulic lines running between the elevator machine room and the hoisting cylinder in the elevator pit.

3.02 EXAMINATION OF WORK BY OTHERS

A. Examine work of other trades which relate to the work of this section. Report, in writing, all defects which may affect work of this section or equipment operation.

B. Verify that electrical power is available and of the correct characteristics.

C. Ensure that shafts and openings for moving equipment are plumb, level and in-line, and that pit is to proper depth and waterproofed. Coordinate the installation of concrete base slab and foundation, and verify that structural support will be achieved in accordance with manufacturer's recommendations, including but not limited to, cylinder support and hoist beam.

D. Verify hoistway shaft and openings are of correct size and within tolerance.

E. Verify that the elevator pit ladder(s) are installed in the correct locations.

F. Ensure that machine room is properly illuminated, heated and ventilated and equipment foundations are correctly located.

G. Beginning of installation indicates acceptance of the pit, hoistway, door openings, machine room and other site conditions as acceptable.

3.03 PREPARATION

A. Before fabrication, verify field dimensions and work that is completed and governed by other trades. Check measurements of space for equipment and means of access for installation and operation.

B. Ensure the following design coordination and preparatory work provided under other sections has been properly completed to receive the elevator work:

1. Supply of electric feeder wires to the terminals of the elevator control panel, including fused main line switch or circuit breaker. Provision of hoistway outlets for car light, and for light in pit and outlets in machine room for light. Furnishing of electric power for testing and adjusting elevator equipment.

2. Dedicated telephone line to elevator machine room.

3. Machine room enclosed and protected from moisture, with lockable door.

C. Supply in ample time prior to installation; inserts, anchors, pipe sleeves, bearing plates, brackets, supports and bracing including setting templates and diagrams for placement.

D. Excavate for below-grade installation of hydraulic lines between machine room and elevator shaft.

3.04 INSTALLATION

A. Perform work with competent mechanics skilled in this work and under the direct control and supervision of the elevator manufacturer's experienced foreman.

B. Set hoistway entrances in alignment with car openings and true with plumb sill lines.

C. Install machinery, guides, controls, car and equipment and accessories in accordance with manufacturer's instructions, applicable codes and standards to provide a quiet, smoothly operating installation, free from sideways, oscillation, or vibration.

D. Mount machine on concrete foundation. Isolate and dampen machine vibration with properly sized sound-reducing anti-vibration pads as recommended by manufacturer.

E. Install and hook-up piping between machine and cylinder.

F. Erect hoistway sills, headers and frames prior to erection of rough walls and doors; erect fascias and toe guards after rough walls finished.

G. Grout sills and hoistway entrance doors.

3.05 CLEANING

A. Prior to final acceptance remove protection from finished or ornamental surfaces and clean and polish surfaces with due regard to type of material.

B. At completion of work of this section, remove tools, equipment and surplus materials from site.

3.06 ADJUST AND BALANCE

A. Make necessary adjustments of equipment to ensure elevator operates smoothly and accurately.

B. Adjust automatic floor leveling feature at each floor to achieve flush alignment.

3.07 PROTECTION

A. Locate and protect moveable equipment and controls, such that they can only be operated by authorized persons.

3.08 FIELD QUALITY CONTROL

A. Contractor Quality Control: Employ / assign quality control personnel to monitor the work of this section for conformance to the requirements of the Contract Documents and to good construction practices.

1. Contractor is solely responsible for managing and controlling the quality of the work and conformance with the requirements of the Contract Documents.

B. Inspection:

1. Obtain and pay for inspections and permits. Coordinate all inspections by elevator inspector and make any modifications or corrections to the completed work required to achieve approval of inspector.

2. Coordinate and provide any tests required by regulations or authorities having jurisdiction.

3. Final inspection shall be after elevator installation, hoisting enclosure and machine room are complete and certified by elevator inspector.

4. Inspect installation in accordance with ASME A17.1.

5. Deliver original copies of test certificates, permits and certification to Owner with a copy to the Architect, along with a transmittal letter signed by Owner's personnel acknowledging receipt.

END OF SECTION

SECTION 20 0000

GENERAL MECHANICAL REQUIREMENTS

PART 1 - GENERAL

1.01 GENERAL

A. Includes, but not limited to, furnishing labor, materials, and equipment for completion of work unless indicated or noted otherwise. See Division 1 for sequence of work.

B. Work indicated on the mechanical plans and in the specifications that will not be performed by this Mechanical Contractor (i.e. duct and pipe block-outs, penetrations through walls, floors, and attic, wall patching, work indicated to be performed by other Contractors, etc.) shall be coordinated with the General Contractor prior to bid. The Mechanical Contractor is responsible for identifying quantity, size, and type of work with the General Contractor. Work not coordinated will be the responsibility of the Mechanical Contractor and shall not be charged as additional cost to the Owner.

C. All work included in Divisions 22 and 23 shall be the responsibility of a single Mechanical Subcontractor. The scope of work identified in these sections can be performed by different subcontractors, but one must take responsibility for coordination. The subcontractor will be identified by the General Contractor at the Pre-Construction Meeting.

D. This Contractor shall obtain and pay for all permits required by State and local authorities governing the installation of the mechanical work. It is the Contractor's responsibility to contact all utility organizations serving the building, prior to bid, and to include all charges for inspections, installation of materials, equipment, and connection of all required utilities.

E. Furnish exact location of electrical connections and complete information on motor controls to Division 26, prior to bid.

F. Put heating, ventilating, cooling, and exhaust systems into full operation and continue their operation during each working day of testing and balancing.

G. Make changes in mechanical drive systems (pulleys, belts, VFD’s, motor speed, etc.) and dampers or add dampers as required for correct balance as recommended by Section 23 0593 and at no additional cost to Owner. All equipment shall be provided with a single point electrical connection, unless otherwise indicated.

H. The drawings and specifications are complementary and what is called for in either is binding as if called for in both.

I. The ductwork and accessibility to HVAC equipment shall take precedence over all other equipment in the ceiling interstitial spaces or other mechanical areas including, but not limited to, sprinkler piping, heating piping, domestic water piping, and electrical conduit (except fire pump rooms where fire sprinkler equipment takes precedence).

1.02 RELATED SECTIONS

A. General and Supplementary Conditions and Division 1 apply to this Section.

1.03 SUBMITTALS REQUIREMENTS OF THIS SECTION

A. Access doors

1.04 QUALITY ASSURANCE

A. Requirements of Regulatory Agencies:

1. Perform work in accordance with applicable Codes.

2. In case of differences between building codes, state laws, local ordinances, utility company regulations, and Contract Documents, the most stringent shall govern.

B. Product Approvals: See paragraphs elsewhere in this specification.

C. Warranties:

1. In addition to guarantee specified in General Conditions, guarantee heating, cooling, and plumbing systems to be free from noise in operation that may develop from failure to construct system in accordance with Contract Documents.

2. In order to be protected, secure proper guarantees from suppliers and Subcontractors.

3. Provide certificates of warranty for each piece of equipment. Clearly record "start-up" date of each piece of equipment on certificate. Include certificates as part of Operation & Maintenance Manual.

D. Manufacture: Use domestic made pipe, pipe fittings, and motors on Project.

E. Identification: Motor and equipment name plates as well as applicable UL and AGA labels shall be in place when Project is turned over to Owner.

1.05 CODES AND STANDARDS

A. Codes and agencies having jurisdictional authority over mechanical installation.

1. Washington State Energy Code – Latest Approved Edition

2. International Building Code – Latest Approved Edition

3. International Fire Code – Latest Approved Edition

4. International Mechanical Code – Latest Approved Edition

5. Uniform Plumbing Code – Latest Approved Edition

6. Local Sewer and Water District Requirements

7. State and County Department of Health

8. Local Fire Marshal

9. State Boiler Inspector

10. Puget Sound Air Pollution Control

11. State of Washington Boiler and Unfired Pressure Vessel Inspection Law

12. Occupational Safety and Health Administration (OSHA)

13. Washington Industrial Safety and Health Act (WISHA)

14. National Fire Protection Association (NFPA)

B. ASME code stamp required on all pressure vessels and relief valves. Certificate required from the State Boiler Inspector showing approval of the equipment and its installation.

1.06 SYSTEMS DESCRIPTION

A. Site Inspection:

1. Examine premises and understand the conditions which may affect performance of work of this Division before submitting proposals for this work.

2. No subsequent allowance for time or money will be considered for any consequence related to failure to examine site conditions.

1.07 DESIGN DRAWINGS

A. Mechanical drawings are not shop drawings and are intended to show general arrangement of piping, ductwork, equipment, etc. Follow as closely as actual building construction and work of other trades will permit.

B. Consider architectural, structural, and electrical drawings part of this work in so far as these drawings furnish information relating to design and construction of building. Architectural drawings take precedence over mechanical drawings.

C. Because of small scale of mechanical drawings, it is not possible to indicate all offsets, fittings, and accessories which may be required. The Mechanical Contractor shall include in the bid a sufficient quantity of offsets, fittings, and accessories for the size of the project, based upon the contractor's experience, necessary to facilitate mechanical utility installation. No additional costs shall be charged for additional offsets, fittings, and accessories required for installation of the mechanical utilities shown on the design drawings. Investigate structural and finish conditions affecting this work and arrange work accordingly, providing such fittings, valves, and accessories required in meeting the design conditions.

1.08 PRE-CONSTRUCTION COORDINATION MEETING

A. This Contractor is responsible to participate in coordination meetings with the General Contractor, Fire Protection Contractor, and other subcontractors needing to coordinate special requirements (such as electrical contractor, HVAC contractor, plumbing contractor, etc.)

B. Coordination meetings shall consider elevations, required clearances, and routings of all trades to assure that all trades can be installed without conflict.

C. The outcome of this coordination shall allow each system (Mechanical, Fire Protection, Plumbing, Electrical, etc.) to be installed without further conflicts for space or locations.

D. Failure to coordinate with other trades and/or existing conditions that result in the removal and re-installation of systems shall not be charged as additional costs.

1.09 COORDINATION DRAWINGS

A. Develop coordination drawings, and other pre-installation coordination methods as necessary to coordinate layouts prior to installation. Coordination drawings shall consist of overlay drawings, or other similar methods to graphically indicate plumbing, fire protection, HVAC, electrical, and other similar elements in a single location in order to identify conflicts. All elements shall be drawn to scale. Coordination drawings are not required to be submitted for approval, except where indicated otherwise in the specification. However, a minimum of one hard copy of coordination drawings shall be present on site at all times and made available to the Architect/Engineer (A/E) Representative upon request. If coordination drawings are not on file, or if systems are not installed per coordination drawings, costs and delays of required re-engineering, replacement, and other work required to correct conflicts shall be solely the Contractor's.

1. Contractor shall have the underground coordination drawings available upon request by A/E Representative within 60 days after Notice to Proceed.

2. Contractor shall have the aboveground coordination drawings available upon request by A/E Representative within 90 days after Notice to Proceed.

B. Coordination drawings shall consist of:

1. Drawing sheets developed sequentially by each trade with all components drawn to scale and color coded to represent each trade.

C. Where coordination drawings, or other preinstallation coordination methods show that available space is inadequate or that modifications will affect architectural elements, request information from the Architect before proceeding with work. No additional payment will be made for installation conflicts which could have been identified by coordination drawings or other pre-installation coordination methods.

D. Make runs parallel with lines of building. Utilize space efficiently to maximize accessibility for other installations, for maintenance, and for repairs.

E. Each subcontractor shall:

1. Indicate the exact name, location, and dimension of each element to be provided by that subcontractor.

2. Arrange components as necessary to avoid conflict with new and existing conditions and the work of other subcontractors as directed by the General Contractor.

3. Note requirements for sleeves, block-outs, cutting, patching, access doors, blocking, supports, inserts, and other similar items.

4. Notify the General Contractor of conflicts.

5. Approve the coordination drawings when all conflicts are resolved and an acceptable layout is obtained.

F. The General Contractor shall coordinate the layouts indicated on the coordination drawings and resolve any conflicts prior to commencement of subject portions of the work.

1.10 ELECTRICAL

A. All electrical work, conduit, boxes, and devices in connection with control wiring as required to install the control equipment as specified herein or shown on the drawings shall be furnished and installed complete by the Division 26 Contractor.

B. All electrical work performed under this Section of the Specifications shall conform to all applicable portions of the Division 26 specifications and shall conform to all governing codes.

C. All equipment shall be factory wired to a junction box for connection to electrical service.

D. Where a piece of equipment specified includes an electric motor, the motor shall be furnished and mounted by this Contractor. Motor starter, disconnect switches, and wiring from the electrical panel to the motor control devices and to the motor shall be provided by the Division 26 Contractor unless stated otherwise in the mechanical specification and/or on the mechanical drawings.

E. All motor controllers and equipment panels (including but not limited to packaged equipment, custom control panels, custom air handler panels, etc.) shall comply with NEC (including, but not limited to, marking on controllers and labeling requirements).

1.11 TEMPORARY HEATING

A. Temporary heating for facility during construction phase shall not be supplied by the permanent system installed under these specifications, unless all of the following are satisfied:

1. Product warranties shall be extended to account for construction use. Contractor shall furnish certified document stating such extended warranties.

2. Contractor shall obtain letter of approval from the Owner stating that they understand equipment expected life may be shortened due to severe usage.

3. Contractor shall be responsible for pressure cleaning all coils and vacuum cleaning all ductwork prior to occupancy.

1.12 PRODUCT HANDLING AND PROTECTION

A. Contractor is responsible for protection of all material, equipment and apparatus provided under this Section from damage, water, corrosion, freezing and dust, both in storage and when installed, until final project acceptance.

B. Provide temporary heated and sheltered storage facilities for material and equipment.

C. Completely cover motors and other moving machinery to protect from dirt and water during construction.

D. Handle and protect equipment and/or material in manner precluding unnecessary fire hazard.

E. Equipment requiring rotation and/or lubrication during storage shall have records maintained and witnessed on a monthly basis and forwarded to the Architect/Engineer prior to acceptance. Provide recorded maintenance for the O&M Manual.

F. Material or equipment damaged because of improper storage or protection will be rejected.

G. Equipment finish that is damaged by handling, storage, etc. shall be corrected by the Contractor at no additional cost to the Owner.

1.13 DEFINITIONS

A. Finished Spaces: Spaces used for habitation or occupancy where rough surfaces are plastered, paneled, or otherwise treated to provide a pleasing appearance

B. Unfinished Spaces: Spaces used for storage or work areas, such as fan rooms, mechanical and boiler rooms, etc., where appearance is not a factor

C. Concealed Spaces: Spaces out of sight. For example, above ceilings; below floors; between double walls; furred-in areas; pipe and duct shafts; and similar spaces

D. Exposed: Open to view. For example, pipe running through a room and not covered by other construction

E. Outside: Open to view up to 5 feet beyond the exterior side of walls, above the roof, and unexcavated or crawl spaces

F. Conditioned Space: An area, room, or space within the building envelope insulation

G. Replace: Existing mechanical equipment and components shall be demolished and discarded from the project site or as directed otherwise. New mechanical equipment and components shall be installed in the area where the existing mechanical equipment and components were demolished or as indicated on the contract documents.

H. Removed: Existing mechanical equipment and components identified on the contract documents shall be taken apart, taken down, and discarded from the project site unless directed otherwise on plan. Removed items shall not be brought back to the project site for use or reinstallation.

I. Reinstall: Existing mechanical equipment and components identified on the contract documents that need to be taken down and installed in the same or new location.

1.14 ABBREVIATIONS

ADA	Americans with Disabilities Act
A/E	Architect/Engineer
AFF	Above Finish Floor
AGA	American Gas Association
AMCA	Air Moving & Conditioning Association
ANSI	American National Standards Institute
APWA	American Public Works Association
ASHRAE	American Society of Heating, Refrigerating and Air Conditioning Engineers

ASME	American Society of Mechanical Engineers
ASTM	American Society of Testing & Materials
AWWA	American Water Works Association
BFF	Below Finish Floor
BHP	Brake Horsepower
BTU	British Thermal Unit
CFM	Cubic Feet per Minute
CISPI	Cast Iron Soil Pipe Institute
fpm	feet per minute
FS	Federal Specifications
FDC	Fire Department Connection
FCO	Flush Cleanout
FD	Floor Drain
FPWH	Freeze Proof Wall Hydrant
GPM	Gallons per Minute
HP	Horsepower
IAPMO	International Association of Plumbing and Mechanical Officials
IAQ	Indoor Air Quality
IEEE	Institute of Electrical and Electronics Engineers
KW	Kilowatt
LPG	Liquefied Petroleum Gas
MBH	One Thousand British Thermal Units per Hour
MS	Military Specifications
MSS	Manufacturers Standardization Society
NEC	National Electrical Code
NEMA	National Electrical Manufacturers Association
NFPA	National Fire Protection Association
NP	Non-Potable Water
NPSH	Net Positive Suction Head
OS&Y	Outside Screw and Yoke
PIV	Post Indicator Valve
PDI	Plumbing and Drainage Institute
per	in accordance with
POC	Point of Connection
PSI	Pounds per Square Inch Gauge Pressure
PVC	Polyvinyl Chloride
SMACNA	Sheet Metal and Air Conditioning Contractors National Association
SP	Static Pressure
SWP	Steam Working Pressure
UL	Underwriter's Laboratories
VFD	Variable Frequency Drive
VTR	Vent Thru Roof
wg	Water Gauge (inches of water)
WP	Working Pressure
WPL	Weatherproof Louver
WQA	Water Quality Association

Additional abbreviations are as listed on the drawings or elsewhere in these specifications.

1.15 SCHEDULE OF VALUES

A. General: Provide schedule of values per Division 1 and related project requirements:

1. Divisions 22 and 23 Breakdown: Provide schedule of values for each building, broken down into labor and materials per specification section at a minimum. Further breakdown into subcategories is at the option of the Contractor, except as noted below:

a. Section 20 0000 - General Mechanical Requirements: Provide a subcategory for “Mechanical Punchlist, Closeout and Owner Training”. The dollar value for this subcategory shall be no less than 2.25% of the total dollar value of the Division 22 and 23 work (or as indicated in Division 1, whichever is higher). The contractor shall receive payment upon completion of all Mechanical Punchlist and Closeout items and Owner Training.

b. Section 20 0000 - General Mechanical Requirements: Provide a subcategory for “Pre-Construction Coordination Meeting.” The dollar value for this subcategory shall be no less than 1% of the total dollar value of the Division 22 and 23 work. Contractor shall submit the meeting's sign in sheet to the Engineer for review. The sign in sheet shall include the printed and signed names of the General and all subcontractors who attended the meeting. The contractor shall receive payment once the sign-in sheet has been verified to meet the Pre-Instruction Coordination requirements of this Section.

c. Section 20 0000 - General Mechanical Requirements: Provide a subcategory for “Coordination Drawings”. The dollar value for this subcategory shall be no less than 1% of the total dollar value of the Division 22 and 23 work. The contractor shall receive payment upon Engineer’s verification of Coordination Drawing completion, in accordance with the requirements of this Section.

d. Section 23 0800 - Commissioning HVAC System: The dollar value for “Commissioning” shall in no case be less than 0.75% of the total dollar value of the Division 22 and 23 work (or as indicated in Division 1, whichever is higher). The contractor shall receive payment upon completion of all outstanding commissioning items as identified by the commissioning agent, Engineer, and/or Owner.

e. Section 23 0900 - Energy Management & Control Systems: Provide a subcategory for “Trend Logs”. The dollar value for this subcategory shall be no less than 1% of the total dollar value of the Division 23 work. The contractor shall receive payment upon completion of the trend logs in accordance with the requirements of this Section and Section 23 0900.

B. The Contractor is advised that in addition to payments held out for retainage and project final completion (i.e. “Mechanical Punchlist, Closeout, and Owner Training”), as specified above and in Division 1, the Owner reserves the right to withhold 10% of the funds for any of the above categories until the systems (of that category) have been proven to operate as specified and have been completely tested, adjusted, and balanced.

1.16 SUBMITTAL PROCEDURES

A. All material used on the project shall be new and free of defects. The Architect and/or Engineer reserve the right to reject any material, the appearance of which has been damaged on the site or in shipment. The material shall be of pre-approved equal quality to that which is specified. Should the make and type of material differ from that specified, the Contractor may be required to submit catalog and engineering data (samples if requested) necessary to make a comparison and determine its suitability. The Contractor shall also bear the cost of all changes to any aspect of the project (electrical, mechanical, building, etc.) made necessary by any approved substitutions. Approved substitutions include those listed as approved manufacturers or approved substitutions. Tentative approval of substitute material and equipment will be made prior to bid only. Such request for approval shall be made two weeks in advance of the bid opening to allow time to assess its suitability. Failure to obtain approval prior to bid shall require the successful bidder to furnish materials and equipment only as specified herein (see paragraph 2.01, this specification).

B. Equipment submittals shall be submitted per one of the following processes as selected by the Architect/Engineer Representative and/or Owner:

1. Electronic Submittal Process:

a. The Contractor shall upload one complete PDF file of the Electronic Submittal Package to the Architect’s SharePoint Site for approval. The Electronic Submittal package shall include the following:

1) All required submittals (i.e. equipment cut sheets, shop drawings, etc.) per each specification section.

2) Table of contents identifying each specification section, submittal requirement of each specification, and the manufacturer name and model number of each item submitted.

3) Index sheet for each specification section.

4) Submission of PDF files of individual specifications or equipment cuts will be automatically rejected.

5) The Contractor shall complete and upload a Submittal Information Form, in Microsoft WORD format, for the A/E team to review. The equipment submittal will not be considered “Received” nor will a review be provided until both the Electronic Submittal Package and Submittal information Form have been uploaded.

6) If the Electronic Submittal Process is not feasible for a particular submittal section (i.e. samples, certain shop drawings, recorded videos, CD’s, etc.), the Contractor shall submit a request in writing to the A/E Representative to deviate from the Electronic Submittal Process. If acceptable by the A/E Representative the Contractor shall follow the Hard Copy Submittal Process for the submission.

2. Hard Copy Submittal Process:

a. The Contractor shall submit to the Architect, for approval, complete information on all equipment and materials to be provided on the project. Provide copies as specified by Division 1 and at a minimum provide six (6) copies of the manufacturer's catalog and engineering data, shop drawings of shop fabricated equipment, and instruction data for each item included under this Section of the Specifications. The Contractor shall submit a typed, signed list including all items to be furnished on the project. The signature on the aforementioned list shall indicate that the Contractor has examined the suitability of all material and equipment with respect to compliance with these specifications. The Contractor's approval shall also indicate that physical dimensions of the equipment have been verified with the installation requirements and were found to cause no interference therewith.

b. Furnish submittals in a hard-back, three-ring binder. The binder shall have tabs which are indexed with a Table of Contents. The Table of Contents shall correlate an index number for each individual specification number. If the equipment submittal is not bound to the Engineer’s satisfaction, it may be rejected.

3. Review of submittal data by the Engineer or Architect does not relieve the Contractor of responsibility for quantities, measurements, and compliance with the intent of all contract documents.

4. Furnish submittals generally according to the list below. Individual sections may contain more specific submittal listing of the particular section labeled “Submittal Requirements.” Furnish on each particular section and the following equipment:

a. Pipe

b. Pipe Insulation

c. Duct Insulation and Lining

d. Hot Water Tanks

e. Boilers

f. Plumbing Fixtures

g. Valves

h. Pipe Hangers

i. Piping Specialties

j. Pumps

k. Gas Flues

l. Fire Sprinkler Equipment

m. HVAC Equipment

n. Temperature Control Equipment and Shop Drawings

o. Air Balance Contractor

p. Hydronic Equipment

q. Air Compressor & Devices

r. Natural Gas Components

s. Fire Marshal Stamped and Approved Shop Drawings for Fire Sprinkler System

t. Any material found to be installed without prior approval will be required to be removed and replaced with only specified material at Contractor's cost.

u. Mechanical Drawings for the project have been developed by the Engineer using AutoCAD™ Revision 2015 software. These drawing files will be made available to the Contractor for development of shop drawings and/or "As-Builts" for a fee of $30.00 per sheet. Full payment to be made prior to release of drawing files.

1.17 OPERATION AND MAINTENANCE MANUAL FOR MECHANICAL SYSTEMS

A. Bind Operation & Maintenance Manual for Mechanical Systems in three-ring, hard-backed binder with clear plastic pocket on spine. Spine of each binder shall have the following typewritten lettering inserted:

OPERATION
AND
MAINTENANCE
MANUAL
FOR MECHANICAL SYSTEMS

B. Provide master index at beginning of Manual showing items included. Use plastic permanent tab indexes for Sections of Manual.

C. First Section shall consist of name, address, and phone number of Architect, General Contractor, and Mechanical, Plumbing, Sheet Metal, Refrigeration, Temperature control, and Electrical Subcontractors. Also include complete list of equipment installed with name, address, and phone number of each vendor.

D. Provide Section for each type of item of equipment.

E. Submit copies as specified by Division 1 and at a minimum provide three (3) copies of Operation & Maintenance Manual to Architect for his approval.

F. Include descriptive literature (Manufacturer's catalog data) of each manufactured item. Literature shall show capacities and size of equipment used and be marked indicating each specific item with applicable data underlined.

G. Include all warranties/guarantees including extended warranties.

H. Include all start-up logs.

I. Operating Instructions shall include:

1. General description of each mechanical system.

2. Step-by-step procedure to follow in putting each piece of mechanical equipment into operation.

3. Provide schematic control diagrams for all systems. Each diagram shall show locations of start-stop switches, insertion thermostats, room thermostats, thermometers, firestats, pressure gauges, automatic valves, and refrigeration accessories. Mark correct operating settings for each control instrument on these diagrams.

4. Provide diagram for electrical control system showing wiring of related electrical control items such as firestats, fuses, interlocks, electrical switches, and relays.

5. Provide drawing of each temperature control panel identifying components on panels and their function.

J. Maintenance Instructions shall include:

1. Manufacturer's maintenance instructions for each piece of mechanical equipment installed in Project. Instructions shall include name of vendor, installation instructions, parts numbers and lists, operation instructions of equipment, and maintenance and lubrication instructions.

2. Summary list of mechanical equipment requiring lubrication showing name of equipment, location, and type and frequency of lubrication.

3. List of mechanical equipment used, indicating name, model, serial number, and name plate data of each item together with number and name associated with each system item.

4. For hydronic systems, include gallons in system, amounts and types of each chemical, etc. Also, include step-by-step procedure to recharge the system.

1.18 COMMISSIONING

A. General Requirements: The building's systems shall be tested to ensure that control devices, components, equipment, and systems are calibrated, adjusted, and operate in accordance with the approved plans and specifications. This shall include the following:

1. Commissioning Plan

2. Systems Testing and Balancing

3. Controls Functional Performance Testing

4. Preliminary Commissioning Report

5. Post Construction Documentation

6. Final Commissioning Report

B. Commissioning Plan: A commissioning plan shall be developed by a registered design professional or approved agency and shall include at a minimum the following:

1. A detailed explanation of the design intent

2. Equipment and systems to be tested

3. Functions to be tested (for example, economizer control, discharge air temperature control, etc.)

4. Conditions under which the test shall be performed

5. Measurable criteria for acceptable performance

C. System Testing and Balancing: Provide testing and balancing as specified in Sections 23 0593 and 23 0595.

D. Controls Functional Performance Testing: Functional testing shall demonstrate the correct installation and operation of each component, system, and system to system intertie relationship in accordance with the plans and specifications. This demonstration is to prove operation, function, and maintenance serviceability for each of the commissioned systems. Testing shall include all modes of operation, including:

1. All modes as described in the sequence of operation

2. Performance of alarms

3. Mode of operation upon a loss of power and restored power

4. The HVAC control system shall be tested to ensure that control devices, components, equipment, and systems are calibrated, adjusted, and operate in accordance with the plans and specifications.

E. Preliminary Commissioning Report: The preliminary commissioning report, completed and certified by the registered design professional or approved agency, shall be provided to the Owner. The preliminary commissioning report shall include test procedures and results, and shall identify the following:

1. Deficiencies found during testing which have not been corrected at the time of report preparation and the anticipated date of correction.

2. Deferred tests which cannot be performed at the time of report preparation due to climatic conditions. Include the climatic conditions required for testing and the anticipated date of each deferred test.

3. Record of progress and completion of operator training.

F. Post Construction Documentation: Provide Operation and Maintenance (O&M) data, as-built record drawings, final commissioning report, and test and balance report, as specified in this section, within 90 days of the date of receipt of the Certificate of Occupancy.

G. Final Commissioning Report: Provide a complete report of test procedures and results to the Engineer and the Owner. The report shall identify the following:

1. Procedures and results of all functional performance tests

2. Disposition of all deficiencies found during testing, including details of corrective measures used or proposed

H. The Contractor is responsible to submit to the code official a commissioning compliance checklist, Figure C408.1.2.1 of the WSEC, signed by the building owner.

1.19 WARRANTY

A. All warranty information shall be submitted as part of the “Operation and Maintenance Manual for Mechanical Systems” in this section.

B. All warranties for mechanical and plumbing equipment shall start upon completion of commissioning.

1.20 AS-BUILT DRAWINGS

A. The Contractor shall maintain, in addition to coordination drawings, an as-built set of prints that clearly identify all deviations from the original design. The As-Built drawings shall be drafted per one of the following methods:

1. Draft all revisions on a separate dark layer, on the coordination drawing set. The Contractor shall maintain a copy of the original coordination drawing set.

2. Draft all revisions on the design drawings with a red color pencil.

B. This red lined set shall identify all drawing revisions including addenda items, change orders, and Contractor revisions.

C. Drawings shall show locations of all underground pipe and duct installed by this Contractor. Underground pipes and ducts shall be shown with cross section elevations. All pipe, raceway, manholes, or lines of other trades shall be included.

D. The Contractor shall update all references to specific products to indicate products actually installed on project. This shall include, but not be limited to, air handlers, heat pumps etc.

1. Upon completion of the Divisions 22 and 23 Work, the Contractor shall deliver the red lined drawings and one set of neatly drafted as-built drawings on electronic media in ACAD 2015 format and PDF files to the Engineer for transmittal through the Engineer to the Owner.

PART 2 - PRODUCTS

2.01 APPROVED MANUFACTURERS

A. Any reference to the specifications or on the drawings to any article, device, product, material, fixture, form, or type of construction by manufacturer, name, make, or catalog number shall be interpreted as establishing a standard of quality and shall not be construed as limiting competition.

B. The manufacturers listed as Approved Manufacturers are approved to bid the project for the items indicated without obtaining prior approval. Other manufacturers desiring to bid the project require prior approval.

C. The listing of a manufacturer as an Approved Manufacturer does not necessarily mean that the products of that manufacturer are equal to those specified. The listing is only an indication of those manufacturers which may be capable of manufacturing, or have in the past manufactured, items equal to those specified, and is intended to aid the Contractor in identifying manufacturers.

D. Products provided by Approved Manufacturers shall be equal to or superior to the specified manufacturer's item in function, appearance, and quality, and shall fulfill all requirements of the plans and specifications. The Architect/Engineer shall be the final judge as to whether an item meets these requirements or not. If a manufacturer is not certain that his product meets these requirements or not, then the manufacturer shall submit data as required to obtain the Design Consultant's approval prior to bid opening.

E. The approval of a manufacturer applies to the manufacturer only and does not relieve the Contractor from the responsibility of meeting all applicable requirements of the plans and specifications.

F. Contractor shall be responsible for all costs to other trades and all revisions required in accommodating any products which are different from those specified or shown.

G. In reviewing a manufacturer for acceptance, factors considered include the following: engineering data showing item's performance, proper local representation of manufacturer, likelihood of future manufacturer's local support of product, service availability, previous installation, previous use by Owner/Engineer/Architect, and record, product quality, availability/quality of maintenance and operation data, capacity/performance compared to specified items, acoustics, items, geometry/access utility needs, and similar concerns.

H. If approval is received to use other than specified items, responsibility for specified capacities and ensuring that items to be furnished will fit space available lies with this Division.

I. If non-specified equipment is used and it will not fit job site conditions, this Division assumes responsibility for replacement with items named in Specification.

2.02 ACCESS DOORS

A. This Contractor shall be responsible for furnishing and installing flush mounted access doors in walls, ceilings, floors, and chases where the following equipment is concealed and is not accessible through same.

1. Valves (shut off, balancing, control, trap primers, etc.)

2. Dampers (control, balancing, fire, smoke, etc.)

B. Doors shall be UL listed 20 ga. cold rolled steel with concealed hinge, screwdriver operated lock and prime coated. Furnish suitable for area mounted. Provide stainless steel access doors for non-painted surfaces (i.e. tile, MDF).

C. Approved Manufacturers:

1. Milcor

2. Acudor

3. Greenheck

4. Nystrom

5. Duro Dyne

PART 3 - EXECUTION

3.01 WORKMANSHIP

A. This Contractor shall provide completed systems with a neat and finished appearance. If, in the judgment of the Engineer, any portion of the work has not been performed in a workmanlike manner or is left in a rough, unfinished state, this Contractor will be required to remove, reinstall, or replace same and patch and paint surrounding surfaces in a manner acceptable to the Engineer, without increase in cost to the Owner.

3.02 FINAL INSPECTION

A. Final Inspection:

1. Prior to acceptance of the mechanical work, the Contractor shall put all mechanical systems into operation for a period of not less than 5 working days so that they may be inspected by the Architect/Engineer and the Owner's representatives.

2. The time of the final inspection shall be mutually agreed to by the Owner, Engineer, and Contractor.

3. The Contractor shall furnish adequate staff to operate the mechanical systems during inspection.

3.03 OPERATION AND MAINTENANCE TRAINING

A. Upon completion of the work, and after all tests and final inspection of the work by the Authority(s) having jurisdiction, the Contractor shall demonstrate and instruct the Owner's designated operation and maintenance personnel in the operation and maintenance of the various mechanical systems. The Contractor shall arrange scheduled instruction periods with the Owner. The Contractor's representatives shall be Superintendents or Foremen knowledgeable in each system and Supplier's Representative when so specified.

B. Scheduled instruction periods shall be:

1.	HVAC System Controls	16 Hours
2.	HVAC Equipment Maintenance	8 Hours
3.	Plumbing Equipment	4 Hours
4.	Boiler Start-Up and Training with Factory Rep	16 Hours

C. The contractor shall, at a minimum, include an Owner Training sign-in sheet in the O&M Manual that indicates the start and end times of the training and the type of training provided. Owner shall sign off on the Owner training sign-in sheet to be considered complete and satisfactory to Owner.

D. Costs for time involved by Contractor shall be included in the bid.

3.04 CLOSEOUT SUBMITTALS

A. Requirements: Final approval of mechanical installation will be recommended upon completion of the following:

1. Completion of all punchlist items
2. Owner Training Sign-In sheet with Owner's signature
3. Permit Submittal
4. Valve Diagrams
5. Reproducible As-Built drawings delivered to Architect
6. Air and/or Water Balance Report
7. Asbestos Free Statement
8. Guarantees

9. Equipment Manufacturer of all HVAC compressor units shall provide start-up logs

10. EMCS Trend Logs

3.05 PREPARATION

A. New Buildings: Each Section of this Division shall bear expense of cutting, patching, repairing, and replacing of work of other Sections required because of its fault, error, tardiness, or because of damage done by it.

B. Existing Buildings:

1. Cut carefully to minimize necessity for repairs to existing work. Do not cut beams, columns, or trusses.

2. Patch and repair walls, floors, ceilings, and roofs with materials of same quality and appearance as adjacent surfaces unless otherwise shown. Surface finishes by General Contractor.

3. Cutting, patching, repairing, and replacing pavements, sidewalks, roads, and curbs to permit installation of work of this Division is responsibility of Section installing work.

4. This work shall be scheduled such that utility services and/or existing systems for the facility are not interrupted during normal operating hours, without prior written permission of the Owner's representative. Work that is performed during normal operational hours shall not interfere with the normal function of the facility's daily operation.

5. The Mechanical Contractor shall be responsible for the removal of all existing mechanical equipment and utilities indicated to be removed on the drawings. The Mechanical Contractor shall also be responsible for the removal and reinstallation of all existing mechanical equipment and utilities that will interfere with installation and operation of any new construction indicated or required and shall be responsible for the removal of all existing mechanical equipment and utilities indicated to be abandoned that will interfere with installation and operation of any new construction indicated or required. All mechanical equipment (other than piping) to be removed shall remain the property of the Owner, and shall be transported, stored, or disposed of, as directed by the Owner. This will be at no cost to the Owner.

3.06 INSTALLATION

A. Install mechanical equipment to permit easy access for normal maintenance, and so that parts requiring periodic replacement or maintenance, (e.g., coils, heat exchanger bundles, sheaves, filters, motors, bearings, etc.) can be removed. Relocate items which interfere with access.

B. Provide access doors in equipment, ducts, and walls/ceilings as required to allow for inspection and proper maintenance.

C. Valves, damper operators, and other devices which are manually adjusted or operated shall be located so as to be easily accessible by a person standing on the floor. Any such items which are not in the open shall be made accessible through access openings in the building construction.

D. Gauges, thermometers, instrumentation, and other components which are installed to monitor equipment performance, operating conditions, etc., shall be oriented so as to be easily read by a person standing on the floor. Provide necessary brackets and hangers as needed.

E. If circumstances at a particular location make the accessible installation of an item difficult or inconvenient, the situation shall be discussed with the Architect/Engineer before installing the item in a poor access location.

F. Belts, pulleys, couplings, projecting set screws, keys, and other rotating parts which may pose a danger to personnel, shall be fully enclosed or guarded in accordance with OSHA regulations.

G. Dissimilar Metals: Provide separations between all dissimilar metals. Where not specified in another way, use 10 mil black plastic tape wrapped at point of contact or plastic centering inserts.

H. Provide offsets around all electrical panels (and similar electrical equipment) to maintain space clear above and below panel to structure and clearance of 3.5 feet directly in front of panel, except where indicated otherwise or required by NEC to be more. Such offsets are typically not shown on the drawings, but are required per this paragraph.

I. Piping Through Framing: Piping through framing shall be installed in the approximate center of the member. Where located such that nails or screws are likely to damage the pipe, a steel plate at least 1/16-inch thick shall be installed to provide protection. At metal framing, wrap piping to prevent contact of dissimilar metals. At metal and wood framing, provide plastic pipe insulators at piping penetrations through framing nearest each fixture and on at least 48-inch centers.

J. Safety Protection: All ductwork, piping, and related items installed by this Contractor that present a safety hazard (i.e., items installed at/near head height, items projecting into maintenance access paths, etc.) shall be covered (at hazardous area) with 3/4" thick elastomeric insulation and 2" wide reflective red/white striped self-sticking safety tape.

K. Equipment Access: Access to equipment is of utmost importance. Contractor shall apply extra attention to the laying out of pipe and duct routings, and in coordinating all work. Poor access to equipment will not be accepted. Contractor shall note that in essentially all areas, piping routed in ceiling space needs to run in joist space, necessitating elbows/fittings/transitions at crosses with other trades, at structural beams, and at all connections to mains and branches. Hatched areas at HVAC units indicate equipment access areas. These (and all other) access areas shall be clear of obstructions. The Mechanical Contractor is responsible to coordinate and ensure that all trades stay clear of access areas for any Divisions 22 and 23 furnished equipment.

L. Ensure that items to be furnished fit space available. Make necessary field measurements to ascertain space requirements including those for connections and furnish and install equipment of size and shape so final installation shall suit true intent and meaning of Contract Documents.

M. Pipe Installation: Install piping in longest reasonable lengths. The use of short lengths of pipe with multiple couplings where a single length of pipe could have been used is not acceptable.

3.07 CONCRETE BASES

A. Provide a 3-inch high "minimum" concrete base under boilers, hot water tanks, and floor-mounted pumps located in mechanical/utilities spaces. Provide 6" thick structural concrete pad for equipment located outside the building or as detailed on drawings.

3.08 ADJUSTMENT AND CLEANING

A. Properly lubricate equipment before Owner's acceptance.

B. Clean exposed piping, ductwork, equipment, and fixtures, remove debris from site. Repair all damaged finishes and leave everything in working order.

C. Remove stickers from fixtures and adjust flush valves.

3.09 PAINTING

A. Paint all exposed pieces of equipment if not factory finished or painted under the Architectural Section of these specifications. Paint shall be one coat primer and two coats enamel color as directed by the Architect.

3.10 REBATES

A. Furnish vendor invoices on heat pumps to Owner after installation for power company rebates.

3.11 REQUESTS FOR INFORMATION (RFI)

A. It is our intent to provide a timely response for RFIs regarding Divisions 22 and 23 Work. To further expedite this process, if a suggestion can be determined or derived at by the initiator of the RFI, it is required this suggestion be supplied with the submitted RFI. If no suggestion is given where one is possible, the RFI will be returned as incomplete. RFI's will be returned to the Contractor within seven (7) business days from the time received by the Architect/Engineer Representative. All Mechanical RFIs shall be written on the form provided at the back of this Section.

END OF SECTION

SECTION 21 0000

GENERAL FIRE PROTECTION REQUIREMENTS

PART 1 - GENERAL

1.01 GENERAL

A. Includes, but not limited to, furnishing labor, materials, and equipment for completion of work unless indicated or noted otherwise. See Division 1 for sequence of work.

B. The Fire Protection Contractor shall review all Architectural drawings to determine if the installed work is to be "Phased". The Fire Protection Contractor shall make the necessary accommodations (caps, valves, minimize penetrations between phased areas, etc.) on the submittal drawings to conform to the Architect's "Phasing Plan".

C. The Fire Protection Contractor shall obtain and pay for all permits required by State and local authorities governing the installation of the fire protection work.

D. The fire protection specifications are a mix of being performance based and prescriptive. It is the Fire Protection Contractor's responsibility to determine the exact pipe routing, elevations, and device locations that will meet NFPA #13, the local Authority Having Jurisdiction, and project specification requirements.

E. The Fire Protection Contractor may request a pre-design meeting with the Architect, Fire Protection Engineer, Fire Protection Contractor, General Contractor, and building Owner Representative to answer any specification and contract design related questions during the early design phase of the project. The Fire Protection Contractor shall provide a written request for this meeting to the General Contractor that is addressed to the Architect.

F. The Fire Protection Sprinkler System Contractor for this project shall be from the Approved Sprinkler System Contractor list contained in paragraph 4.01.A of this Specification Section. All Fire Protection Sprinkler System Contractors not listed in paragraph 4.01.A, shall submit the information described in paragraph 4.02 of this Specification Section for the qualifications to obtain approval to bid. Additions to the Approved Sprinkler System Contractor list will be made prior to bid only and will be published by addendum if accepted.

G. **All fire protection sprinkler system components and devices shall be domestically manufactured. Imported components will not be allowed.**

H. All piping shall have the manufacturers stenciling that is installed at the factory along the length of the pipe. The stenciling shall consist of the manufacturer's identifier (name or logo) at a minimum. Piping that does not contain the information described (i.e., no stenciling on black pipe, white dashes on black pipe, etc.) shall be assumed to be imported and shall be replaced at the Fire Protection Contractors expense. All exposed piping that is to be painted shall be visually inspected by the engineer prior to being painted.

1.02 RELATED DOCUMENTS

A. Drawings, General Conditions and Supplementary Conditions of the Contract, including Division 0 and Division 1 Specification Sections apply to work of this Division.

1.03 RELATED SECTIONS

A. The following sections apply to this section:

1. Section 21 1123 "PRIVATE SERVICE FIRE MAINS"

2. Section 21 1313 "WET PIPE AUTOMATIC SPRINKLER SYSTEMS"

3. Section 21 1316 "DRY PIPE AUTOMATIC SPRINKLER SYSTEMS"

1.04 COORDINATION

A. The Fire Protection Contractor is responsible to initiate coordination meetings with the General Contractor. The General Contractor shall also involve the other Contractors needing to coordinate spatial requirements such as the Electrical Contractor, Mechanical Contractor, Plumbing Contractor, etc. as part of these coordination meetings.

B. The Fire Protection Contractor shall participate in the coordination meetings to coordinate the sprinkler system installation with the HVAC ductwork, HVAC units, plumbing piping, hydronic piping, and/or existing conditions.

C. Coordination meetings shall consider elevations, required clearances, and routings of all trades to assure that all trades can be installed without conflict.

D. The outcome of this coordination shall allow each system (Electrical, Mechanical, Fire Protection, Plumbing, etc.) to be installed without further conflicts for space or locations.

E. Failure to coordinate with other trades and/or existing conditions that result in the removal and re-installation of systems shall not be charged as additional costs.

1.05 PIPE PENETRATIONS

A. Provide pipe sleeves or core-drilled holes where piping passes entirely through concrete walls, floors, platforms, and foundations.

B. Secure sleeves in position and location during construction and provide sleeves of sufficient length to pass through entire thickness of walls, floors, platforms, and foundations.

C. Provide minimum clearances per NFPA #13 between exterior of piping and interior of sleeve or core-drilled hole.

D. Where piping passes through fire walls and fire floors, seal both end of pipe sleeves or core-drilled holes with U.L listed or Factory Mutual Global approved fill, void, or cavity material that maintains the fire resistance rating of the assembly being penetrated.

E. Refer to Division 07 for requirements on sealing of penetrations.

F. Requirements for utilizing pipe sleeves at penetrations:

1. Sleeves in masonry and concrete walls, floors, platforms, and foundations: Provide hot-dip galvanized steel, ductile-iron, cast-iron, or PVC sleeves. Core drilling of masonry and concrete may be provided in lieu of pipe sleeves when cavities in the core-drilled hole are completely grouted smooth.

2. Sleeves in other than masonry and concrete walls, floors, platforms, and foundations: Provide 26 gauge galvanized steel sheet material as a minimum thickness.

3. Sleeve Sizing: A nominal diameter of 2” larger than the nominal diameter of the pipe is acceptable for pipe sizes 1” through 3½” and a nominal diameter 4” larger than the nominal diameter of the pipe is acceptable for pipe sizes 4” and larger.

4. Clearance Omission: No clearance is necessary for piping passing through gypsum wallboard or equally frangible material that has no fire resistance rating or if flexible couplings are installed within 1’-0” of each side of the wall, floor, platform, or foundation.

G. Requirements for utilizing core drilled holes at penetrations:

1. Core Sizing: A diameter of 2” larger than the actual diameter of the pipe is acceptable for pipe sizes 1” through 3½” and a diameter 4” larger than the actual diameter of the pipe is acceptable for pipe sizes 4” and larger.

2. Clearance Omission: No clearance is necessary for piping passing through gypsum wallboard or equally frangible material that has no fire resistance rating or if flexible couplings are installed within 1’-0” of each side of the wall, floor, platform, or foundation.

H. The Fire Protection / Mechanical drawings do not specifically identify penetrations through walls, floors, platforms, and foundations.

I. The Fire Protection Contractor shall review all architectural and structural drawings to determine all penetration locations.

J. All penetration locations through walls, floors, platforms, and foundations shall be coordinated with the General Contractor and all other trades.

K. All penetrations through walls, floors, platforms, and foundations are the responsibility of the Fire Protection Contractor.

1.06 FIRE ALARM / ELECTRICAL CONNECTIONS

A. The Fire Protection Contractor shall provide all new fire alarm devices associated with the fire protection system (flow switches, pressure switches, tamper switches, etc.), as indicated on the contract documents.

B. The electric bell and back box shall be provided by the Fire Alarm Contractor.

C. The low voltage electrical Contractor shall make all connections and terminations of the fire alarm devices to the fire alarm system control panel.

D. All electrical work performed under this Section of the Specifications shall conform to all applicable portions of the Division 26 specifications and shall conform to all governing codes.

E. Where a piece of equipment specified includes an electric motor (such as in an air compressor), the motor shall be furnished and mounted by this Contractor. Motor starter, disconnect switches and wiring from the electrical panel to the motor control devices and to the motor shall be provided by the Division 26 Contractor unless stated otherwise in the fire protection specifications and on the fire protection drawings (schedules and/or notes).

1.07 SITE INSPECTIONS OF EXISTING SITE CONDITIONS PRIOR TO BIDDING

A. The Fire Protection Contractor shall examine premises and understand the existing conditions that may affect performance of the Fire Protection Contractor's work of this Division before submitting proposals and/or bids for this work.

B. No subsequent allowance for time or costs will be considered for any consequence related to failure to examine site conditions.

C. Existing site conditions may not be fully depicted on the contract documents and it is the bidding Fire Protection Contractor's responsibility to fully understand the existing conditions of the project.

1.08 CONTRACT DOCUMENTS

A. Fire Protection drawings may show general arrangement of exposed piping in critical or highly sensitive areas of the building. Follow as closely as actual building construction and work of other trades will permit.

B. The Fire Protection Contractor shall be responsible for reviewing all contract documents such as architectural, civil, electrical, mechanical, plumbing, structural, specialty equipment, fire protection drawings, etc. These drawings could furnish information and/or details related to the design and construction of this project that requires additional fire protection that is not indicated on the fire protection contract documents. It is the Fire Protection Contractor's responsibility to review the design documents of all trades and to coordinate the design documents with the fire protection shop drawings.

C. Architectural drawings take precedence over Fire Protection drawings. Additional notes affecting the fire protection sprinkler system design may be contained in the drawings of other trades.

D. Because of small scale of fire protection drawings, it is not possible to indicate all offsets, fittings, and accessories which may be required. Investigate structural and finish conditions affecting this work and arrange work accordingly, providing such fittings, valves, and accessories required to meet conditions.

E. Drawings of larger scale and of greater detail take precedence over drawings of smaller scale and lesser detail.

F. Drawings with written or computed dimensions take precedence over scaled dimensions.

G. Where new piping locations are shown on the contract documents, the piping shall be designed and installed in a similar fashion, unless accepted by the design team. The Fire Protection Contractor is responsible for providing the required elbows, fittings, transitions, and offsets to accommodate structural members, architectural features, and coordination with other trade work.

H. The fire protection system installation shall be made in accordance with the drawings, specifications, and applicable standards. Should a conflict occur between the drawings and specifications, the specifications shall prevail, refer to Division 1.

I. In the case that criteria contained on the drawings is omitted from the specifications or the specifications have criteria that is omitted from the drawings, the criteria given in one location shall apply as if shown in both the drawings and in the specifications (what's in one document applies to both documents). The drawings and specifications are complementary and what is called for in either is binding as if called for in both, see General Conditions of the Project Manual.

J. The latest dated document shall have precedence over earlier released documents such as Change Orders, ASI directives, RFI responses, project Addendums, etc.

K. The Fire Protection Contractor shall provide any work or materials the provision of which is clearly implied in the contract documents or project specifications, even if not specifically indicated.

1.09 SUBMITTALS

A. All material used on the project shall be new and free of defects.

B. The Fire Protection Contractor shall also bear the cost of all changes to any aspect of the project (electrical, mechanical, building, etc.) made necessary by any approved substitution. Tentative approval of substitute material and equipment will be made **prior to bid only**. Such request for approval shall be made **7 days** in advance of the bid opening to allow time to assess its suitability. Failure to obtain approval prior to bid shall require the successful bidder to furnish materials and equipment only as specified herein (see Specification Section 21 0000 Paragraph 2.01).

C. The Fire Protection Sprinkler System Contractor shall simultaneously submit shop drawings, calculations, and manufacturer's data sheets to the Architect/Engineer for review and obtain approval from the Architect/Engineer prior to the purchase, fabrication, or installation of any system component.

D. Failure to receive the Architect/Engineer approval that results in reordering of material, re-fabrication of piping, removal of installed system components, and the re-installation of the fire protection system shall not be charged as additional cost to the Owner or General Contractor.

E. Contractor qualifications shall be presented to the Architect / Engineer for review and approval within **60 calendar days** from the date of the Contract signing by the General Contractor.

F. Equipment submittals shall be presented to the Architect / Engineer for review and approval within **60 calendar days** from the date of the Contract signing by the General Contractor.

G. Shop drawings, seismic brace calculations, and hydraulic calculations for overhead fire protection systems shall be presented to the Architect / Engineer for review and approval within **60 calendar days** from the date of the Contract signing by the General Contractor.

H. Shop drawings and thrust block calculations for underground fire protection piping shall be presented to the Architect / Engineer for review and approval within **60 calendar days** from the date of the Contract signing by the General Contractor.

I. A colored bond copy of the "Graphic Map" shall be presented to the Architect / Engineer for review and approval prior to final system testing.

J. All applicable items contained in the "Working Plans" section of the latest edition of NFPA #13 adopted by the Authority Having Jurisdiction shall be included as part of the submittal package.

K. Equipment Submittals shall contain original brochures supplied by manufacturers (scans of photo copied originals will not be accepted). Each type of device provided shall be identified in the Equipment Submittals using the same identification as shown on the drawings and specifications. The information included must be the exact equipment to be installed, not the complete "line" of the manufacturer. Where sheets show the equipment installed and other equipment, the installed equipment shall be neatly and clearly identified on such sheets.

L. Each fire protection specification section shall be tabbed individually with a Table of Contents at the beginning of each section.

M. Combining equipment submittals from multiple fire protection specification sections into a single equipment submittal will not be allowed.

N. Submitting portions of the equipment submittals will not be accepted.

O. Electronic delivery of the submittals shall meet the following format requirements:

1. Submittal Drawings:

   a. The Submittal Drawings shall be a single PDF that is formatted to actual size (not 11x17) and collated in numerical order as designated in the title block of each drawing.

2. Equipment Submittals:

   a. The Equipment Submittal shall be a single PDF.

   b. The Equipment Submittal PDF shall contain all equipment, devices, and components that are collated for printing on 8½"x11" sized paper.

   c. The Equipment Submittal PDF shall be formatted for duplex printing with blank sheet inserted where necessary.

   d. The Equipment Submittal PDF shall contain a "Table of Contents."

   e. The Equipment Submittal PDF shall be bookmarked by "Tabbed Divider" for each category of equipment, device, and component.

   f. Hydraulic Calculations and Seismic Brace Calculations that are submitted as part of the Equipment Submittal PDF shall be formatted to the following:

      1) Calculations shall be included at the end of the Equipment Submittal PDF under a separate "Tabbed Divider" for both Hydraulic Calculations and the Seismic Brace Calculations.

2) The Equipment Submittal "Table of Contents" shall also indicate all calculations being provided for both the Hydraulic Calculations and the Seismic Brace Calculations.

3. Hydraulic Calculations and Seismic Brace Calculations that are submitted as a separate PDF from the Equipment Submittal PDF:

a. The single Hydraulic Calculations and Seismic Brace Calculations submittal PDF shall contain all calculations that are collated for printing on 8½"x11" sized paper.

b. The Hydraulic Calculations and Seismic Brace Calculations submittal PDF shall be formatted for duplex printing with blank sheet inserted where necessary.

c. The Hydraulic Calculations and Seismic Brace Calculations submittal PDF shall contain a "Tabbed Divider" to separate the Hydraulic Calculations from the Seismic Brace Calculations.

d. The Hydraulic Calculations and Seismic Brace Calculations submittal PDF shall contain a "Table of Contents."

e. The Hydraulic Calculations and Seismic Brace Calculations submittal PDF shall be bookmarked by "Tabbed Divider.

4. Thrust Block Calculations:

a. The single Thrust Block Calculation submittal PDF shall contain all calculations that are collated for printing on 8½"x11" sized paper.

P. Review of submittal data by the Engineer or Architect does not relieve the Fire Protection Contractor of responsibility for quantities, measurements, and compliance with the intent of all contract documents.

Q. Any material found to be installed without prior approval will be required to be removed and replaced with only specified material at Contractor's cost.

R. See each individual specification section associated with this project for required equipment submittals.

S. Submittal of Qualifications:

1. Qualifications of welders shall meet or exceed American Welding Society (AWS) B2.1 "Standard Welding Procedures and Performance Qualifications" or Section IX of the ASME "Boiler and Pressure Vessel Code".

2. Welding procedures shall comply with the qualification requirements of NFPA #13 and that meet or exceed American Welding Society (AWS) B2.1 "Standard Welding Procedures and Performance Qualifications" or SME Section IX of the ASME "Boiler and Pressure Vessel Code".

3. Upon request, submit State of Washington "Certificate of Competency" documentation of the company and individual performing the design and the installation of the fire protection system.

4. The "Certification of Competency" shall be listed on the "Washington State Patrol – Office of the State Fire Marshal – Licensing and Certification Report" website indicating that the submitted "Certification of Competency" is valid and up to date. If either the company or individual certifications are not indicated at this website, the company will not be allowed on the project.

T. Submit the following items prior to substantial completion inspection for review and approval:

1. List of Spare Sprinklers

2. Hydraulic Signs (Placards)

3. General information Signs

1.10 SCHEDULE OF VALUES

A. Provide schedule of values per Division 1 and related project requirements:

1. Provide a "Schedule of Values" that shall be broken down in accordance with the following subsection. Further breakdown into subcategories is at the option of the Fire Protection Contractor, except as noted below:

a. Engineering

b. Coordination Meetings

c. Materials and Labor

d. Closeout Materials

2. Engineering:

   a. The dollar value for "Engineering" work associated with each Fire Protection Specification Section shall in no case be less than 17.00% of the total dollar value of the Fire Protection work or as indicated in Division 1, whichever is higher. "Engineering" work shall be a lump sum line item for each fire protection specification section consisting of the following at a minimum:

      1) Shop Drawings

      2) Seismic Brace Calculations

      3) Hydraulic Calculations

      4) Equipment Submittals

      5) Permitting

      6) Architect and/or Engineer Approval

   b. The Fire Protection Contractor is advised there will be no payments for "Engineering" until the submittal materials (Shop Drawings, Seismic Brace Calculations, Hydraulic Calculations, and Equipment Submittals) have been reviewed and approved by the Architect and/or Engineer.

3. Coordination Meetings:

   a. Provide a separate line item in the "Schedule of Values" for coordination meetings.

   b. The dollar value for "Coordination Meetings" shall be not less than 3.00% of the total dollar value of all Fire Protection work.

   c. **The Fire Protection Contractor is advised there will be no payments for "Coordination Meetings" until the documentation required in Paragraph 1.04.F of this Specification Section is received by the Architect and/or Engineer.**

4. Materials and Labor:

   a. Provide a separate line item in the "Schedule of Values" for "Materials and Labor" associated with each Fire Protection Specification Section.

b. Each Fire Protection Specification Section shall be broken down into separate line items for rough-in and finish work in the "Schedule of Values" consisting of the following at a minimum.

1) Each building shall have a line item.

2) Each system shall have a line item.

3) Each floor of the building shall have a line item.

4) Each wing, each "Phased Area" of the project, or area defined on the Architectural documents shall have a line item.

c. The dollar value for "Materials and Labor" shall be the remaining percentages of the total dollar value of all Fire Protection work.

5. Closeout Materials:

a. Provide a separate line item in the "Schedule of Values" for each "Closeout Material" which consists of the following at a minimum.

1) Hydraulic Placards

2) General information Signs

3) List of Spare Sprinklers

4) Punch List, Sprinkler List, Hydraulic Placards, General Information Sign, Graphic Map

5) Warranty Letters, Signed Test Certificates, As-Built Drawings, and Operations and Maintenance Manuals

6) Owner Training

b. The dollar value for "Closeout Materials" shall be not less than 3.00% of the total dollar value of all Fire Protection work or as indicated in Division 1, whichever is higher.

6. The Fire Protection Contractor is advised that in addition to payments held out for retainage and project closeout materials, the Owner reserves the right to withhold 5% of the funds for any of the above categories until the systems have been approved.

1.11 QUALITY ASSURANCE

A. Requirements of Regulatory Agencies:

1. Perform work in accordance with applicable Codes.

2. In case of differences between building codes, state laws, local ordinances, utility company regulations, and Contract Documents, the most stringent shall govern.

B. Product Approvals: See each individual specification section associated with this project for the prior approved products.

C. Materials: **Use only domestic made pipe, fittings, valves, hangers, sprinklers, and devices on this Project.**

1.12 CODES AND STANDARDS

A. Codes and agencies having jurisdictional authority over Fire Protection installations.

1. International Building Code -- Latest Adopted Edition

2. International Fire Code – Latest Adopted Edition

3. Local Water District Requirements

4. State and County Department of Health

5. Local Fire Marshal

6. Occupational Safety and Health Administration (OSHA)

7. Washington Industrial Safety and Health Act (WISHA)

8. National Fire Protection Association (NFPA)

9. Underwriters Laboratories (UL) Approval Guides

1.13 PRODUCT HANDLING AND PROTECTION

A. Fire Protection Contractor is responsible for protection of all piping, fittings, and devices provided under this specification section free from damage, water, corrosion, rust, or foreign matter build up both in storage and when installed, until final project acceptance.

B. Materials in the staging areas shall be protected by an approved means to prevent corrosion of the sprinkler system components. Failure to do so shall result in the material not being approved and if found installed will be replaced at the Fire Protection Contractor's expense.

C. Equipment finish that is damaged by handling, storage, etc. shall be corrected by the Fire Protection Contractor at no additional cost to the Owner.

D. The Architect and/or Engineer reserve the right to reject any material, the appearance of which has been damaged on the site or in shipment.

1.14 OPERATION AND MAINTENANCE MANUAL FOR FIRE PROTECTION SYSTEMS

A. Each fire protection specification section shall be tabbed individually with a Table of Contents at the beginning of each section.

B. Combining Operations and Maintenance Manuals from multiple fire protection specification sections into a single Operations and Maintenance Manual will not be allowed.

C. Provide a section for each category of item of equipment.

D. Submit copies of the Operation and Maintenance Manual as specified by Division 1 to Architect for approval.

E. Submit Operation and Maintenance manuals for each piece of equipment requiring instructions on operation and/or maintenance and cut sheets of sprinklers being utilized.

F. Operation and Maintenance manuals shall contain shop drawings, wiring diagrams, operating and maintenance instructions, replacement parts lists, and equipment nameplate data for all equipment and systems installed under the project.

G. Include descriptive literature (Manufacturer's catalog data) of each manufactured item. Literature shall show capacities and size of equipment used and be marked indicating each specific item with applicable data underlined.

H. Operation and Maintenance manuals shall contain original brochures supplied by manufacturers (photocopies of originals will not be accepted).

I. The information included must be the exact equipment installed not the complete "line" of the manufacturer. Where sheets show the equipment installed and other equipment, the installed equipment shall be neatly and clearly identified on such sheets.

J. Parts lists shall give full ordering information assigned by the original parts manufacturer. Relabeled and/or renumbered parts information as reassigned by equipment supplier is not acceptable.

K. The following information shall be provided for each device:

1. Manufacturer's name, address, and phone number

2. Local supplier's name, address, and phone number

3. Complete parts lists including quantities and manufacturer's part numbers

4. Installation instructions

5. Recommended maintenance items including maintenance procedure

L. Operating Instructions shall include:

1. General description of each fire protection system

2. Step-by-step procedure to follow shutting down each fire protection system

3. Step-by-step procedure to follow putting each fire protection system back into operation

M. If the Operations and Maintenance Manuals are being delivered electronically, the Fire Protection Contractor shall provide the following:

1. "As-Built" Drawings:

a. The "As-Built" Drawings shall be a single PDF that is formatted to actual size (not 11x17) and collated in numerical order as designated in the title block of each drawing.

2. Operations and Maintenance Manual Submittals:

a. The Operations and Maintenance Manual Submittal shall be a single PDF.

b. The Operations and Maintenance Manual Submittal PDF shall contain all equipment, devices, and components having replacement parts or can be replaced, and marked-up cut sheets of all fire sprinklers utilized, that are collated for printing on 8½"x11" sized paper.

c. The Operations and Maintenance Manual Submittal PDF shall be formatted for duplex printing with blank sheet inserted where necessary.

d. The Operations and Maintenance Manual Submittal PDF shall contain a "Table of Contents" that indicates all pieces of equipment, devices, and components contained within each "Tabbed Divider" defined in Paragraph 1.09.P of this Specification Section.

e. The Operations and Maintenance Manual Submittal PDF shall be bookmarked by "Tabbed Divider" for each category of equipment, device, and component.

N. The information contained in the Operation and Maintenance manuals shall be grouped in an orderly arrangement by specification. The Operation and Maintenance manuals shall have a typewritten Table of Contents and divider sheets between categories with identifying tabs. The covers shall be imprinted with the name of the job, Owner, Architect, and year of completion.

1.15 WARRANTY LETTER

A. In addition to the guarantee specified in General Conditions, the Fire Protection Contractor shall guarantee that the fire protection systems are installed to NFPA code and approved shop drawings.

B. In order to be protected, secure proper guarantees from suppliers and any Sub-Contractors. Include all warranties/guarantees including extended warranties.

C. Provide a "Certificate of Warranty" letter at the completion of the project. The date of "Substantial Completion" shall be clearly shown on the letter indicating when the warranty period begins and the "Certificate of Warranty" letter shall be signed by the Fire Protection Contractor.

D. The "Certificate of Warranty" shall be included as part of the Operation and Maintenance Manual. The date of "Substantial Completion" shall be the date indicated on the approved test certificate that was signed by the Authority Having Jurisdiction for system acceptance.

1.16 TEST CERTIFICATES

A. The following completed tests shall be contained as a minimum on "Test Certificates" provided to the Owner at completion of this project.

B. Water Based Sprinkler Systems

1. Private Fire Service Mains

   a. Underground lead-in hydrostatic testing

   b. Underground purification testing

   c. Underground lead-in flushing per NFPA #13 and NFPA #24 requirements

   d. Full forward flow testing of the backflow preventer

   e. Backflow preventer certification testing

2. Wet pipe automatic fire protection sprinkler system

   a. Overhead hydrostatic testing

   b. Overhead fire alarm connection point interface testing

   c. Purification of piping on the potable side of the backflow preventer

   d. Full forward flow testing of the backflow preventer

   e. Backflow preventer certification testing

f. Main drain testing

3. Dry pipe automatic fire protection sprinkler system

a. Overhead hydrostatic testing

b. Overhead fire alarm connection point interface testing

c. Purification of piping on the potable side of the backflow preventer

d. Full forward flow testing of the backflow preventer

e. Backflow preventer certification testing

f. Main drain testing

g. Air pressure testing of the dry pipe automatic fire protection sprinkler system

h. Trip time / Water Delivery time testing of the dry pipe automatic fire protection sprinkler system

1.17 AS-BUILT DRAWINGS

A. The Fire Protection Contractor shall maintain, in addition to any reference drawings, an As-Built set of drawings, which have been reproduced from the approved site set on which all deviations from the original design shall be drafted in a neat legible manner with red colored pencil.

B. The Fire Protection Contractor shall update all references to specific products to indicate products actually installed on project.

C. Upon completion of work, the Fire Protection Contractor shall deliver the red lined drawings and one set of neatly drafted As-Built drawings on electronic media to the Architect for the Engineer to review and accept prior to being forwarded to the Owner for their records.

D. Submit full-scale drawings that are not larger than the contract documents (out of scale drawings will not be allowed)

E. The As-Built drawings shall show actual installation from all change orders, field authorizations, design changes, installation modifications, etc.

F. As-Built drawings shall contain dimensions to all main piping (from structure or gridlines), elevations of all piping (both above finished floor and below structure), and pipe length for all piping including riser nipples, sprigs, drops, and dry sprinklers.

G. Schematic details provided on submittal drawings shall be changed to project specific details with all piping and devices sized and drawn to scale.

1.18 GRAPHIC MAP

A. The Fire Protection Contractor shall provide a "Graphic Map" in the main sprinkler system riser room for each building associated with this project and a "Graphic Map" is to be placed in each of the Operations and Maintenance Manuals.

B. The "Graphic Map" shall identify the locations of all of the following:

1. Auxiliary Drain Valves
2. Remote Inspector's Test Valves
3. Auxiliary Control Valves
4. Yard Post Indicating Valve (if installed as part of the project)
5. Backflow Preventer in a vault (if installed as part of this project)
6. Access Panels
7. Main System Riser
8. Automatic Air Vents

C. The "Graphic Map" shall consist of the following items:

1. Color representation of the building(s) floor plan.
   a. Black: Building walls (interior and exterior)
   b. Black: Building Gridlines (optional)
   c. Black: "Graphic Map" title
   d. Black: North Arrow
   e. Black: Room Names and Room Numbers
   f. Black: Text and leader lines that identify locations of all valves
   g. Red: All horizontal sprinkler piping, elevation changes in piping are not required to be indicated on the "Graphic Map"
   h. Cyan: All Acoustical Tile Ceilings
   i. Blue: All Access Panels
2. All text shall be a minimum of 3/32" in height and placed to not be superimposed over walls or sprinkler piping. The text shall be legible and clear utilizing leader lines to move text to a clear location.

3. The "Graphic Map" shall be full color image printed on 8½"X11", 11"X17", 22"x34", or 24"X36" media, depending upon the size of the project and clarity of the information.

D. The "Graphic Map" in the main sprinkler system riser room shall be laminated and securely fastened to the wall adjacent to the spare sprinkler cabinet.

E. The "Graphic Map" in each of the Operations and Maintenance Manuals shall be on bond paper and placed within a plastic sheet protector.

1.19 START-UP / SHUT DOWN PROCEDURES

A. The "Operations and Maintenance Manual" shall contain a section devoted to the Start-Up / Shut Down Procedures of all systems.

B. The Start-Up / Shut Down Procedures shall consist of a detailed list of step-by-step instructions to follow, including any and all intermediate steps.

1.20 CLOSE OUT MATERIAL

A. The fire protection close out material shall be submitted to the Architect for review and approval by the Engineer prior to being provided to the Owner.

B. The close out materials shall include the following at a minimum:

1. Operations and Maintenance Manuals: See Paragraph 1.14 of this Specification Section for "Operations and Maintenance Manual" requirements.

2. Warranty Letters: See Paragraph 1.15 of this Specification Section for "Warranty Letter" requirements.

3. Test Certificates: See Paragraph 1.16 of this Specification Section for "Test Certificate" requirements.

4. As-Built Drawings: See Paragraph 1.17 of this Specification Section for "As-Built Drawing" requirements.

5. Graphic Map: See Paragraph 1.18 of this Specification Section for "Graphic Map" requirements.

6. Start-Up / Shut Down Procedures: See Paragraph 1.19 of this Specification Section for "Start-Up / Shut Down Procedures" requirements.

1.21 ABBREVIATIONS

AEG	Above Exterior Grade
AFF	Above Finish Floor
AHJ	Authority having Jurisdiction
ANSI	American National Standards Institute
ASME	American Society of Mechanical Engineers
ASTM	American Society of Testing & Materials
AWWA	American Water Works Association
BHP	Brake Horsepower
CH	Ceiling Height
CPVC	Chlorinated Polyvinyl Chloride
EC	Electrical Contractor
FDC	Fire Department Connection
FM	Factory Mutual Global
GC	General Contractor
GPM	Gallons per Minute
HP	Horsepower
MC	Mechanical Contractor
NEC	National Electrical Code
NEMA	National Electrical Manufacturers Association
NFPA	National Fire Protection Association
NRS	Non-Rising Stem
NTS	Not to Scale
OS&Y	Outside Screw and Yoke
PIV	Post Indicator Valve
POC	Point of Connection
PSI	Pounds per Square Inch Gauge Pressure
UFC	Unified Facilities Criteria (U.F.C.)
UL	Underwriter's Laboratories

PART 2 - PRODUCTS

2.01 ACCEPTABLE MANUFACTURERS

A. Any reference in the specifications or on the drawings to any article, device, product, or material, by manufacturer, name, make, model, or catalog number shall be interpreted as establishing a standard of quality and shall not be construed as limiting competition.

B. The manufacturer listed as "Approved Manufacturer" has been approved for this project for the items indicated and does not require obtaining prior approval. Other manufacturers not listed shall require prior approval.

C. The listing of a manufacturer as an "Acceptable Manufacturer" does not necessarily mean that the products of that manufacturer are equal to those specified. The listing is only an indication of those manufacturers which may be capable of manufacturing, or have in the past manufactured, items equal to those specified, and is intended to aid the Fire Protection Contractor in identifying manufacturers.

D. A product provided by an "Approved Manufacturer" shall be equal to or superior to the specified manufacturer's item in function, appearance, and quality, and shall fulfill all requirements of the contract documents and specifications. The Architect/Engineer shall be the final judge as to whether an item meets these requirements or not. If a manufacturer is not certain that his product meets these requirements or not, then the manufacturer shall submit data as required to obtain the Architect/Engineer's approval prior to bid opening.

E. The approval of a manufacturer applies to the manufacturer only and does not relieve the Fire Protection Contractor from the responsibility of meeting all applicable requirements of the plans and specifications.

F. Fire Protection Contractor shall be responsible for all costs to other trades and all revisions required to accommodate any products which are different from those specified or shown.

G. In reviewing a manufacturer for acceptance, factors considered include the following: engineering data showing item's performance, proper local representation of manufacturer, likelihood of future manufacturer's local support of product, service availability, previous installation, previous use by Owner/Engineer/Architect, product quality, availability/quality of maintenance and operation data, capacity/performance compared to specified items, and similar concerns.

H. If approval is received to use other than specified items, responsibility for ensuring that items to be furnished will fit space available lies with this Division.

I. If non-specified equipment is used and it will not fit job site conditions, the Fire Protection Contractor assumes responsibility for replacement with items named in project specifications.

J. All Substitution Requests shall be submitted on the forms provided in Division 0 or 1 of the General and Supplemental Conditions of the Project Manual.

K. The material shall be of pre-approved equal quality to that which is specified. Should the make and type of material differ from that specified, the Fire Protection Contractor may be required to submit catalog and engineering data (samples if requested) necessary to make a comparison and determine its suitability.

PART 3 - EXECUTION

3.01 WORKMANSHIP

A. This Fire Protection Contractor shall provide completed systems with a neat and finished appearance. If, in the judgment of the Engineer, any portion of the work has not been performed in a workmanlike manner or is left in a rough unfinished state, the Fire Protection Contractor will be required to remove, reinstall, or replace same and patch and paint surrounding surfaces in a manner acceptable to the Engineer, without increase in cost to the Owner or General Contractor.

3.02 CLOSEOUT SUBMITTALS

A. Requirements: Final approval of fire protection installation will be recommended upon completion of the following:

1. Completion of all punch list items
2. Operation instruction period to Owner's satisfaction
3. Permit Submittal
4. As-Built drawings on electronic media delivered to Architect
5. Signed Warranty Letter
6. Operations and Maintenance Manuals
7. Completed and Signed Test Certificates
8. Graphic Map

3.03 FINAL INSPECTION

A. Prior to acceptance of the fire protection work, the Fire Protection Contractor shall put all fire protection systems into operation for a period of not less than 5 working days so that they may be inspected by the Architect/Engineer and the Owner's representatives.

B. The time of the final inspection shall be mutually agreed to by the Authority Having Jurisdiction and the Fire Protection Contractor.

3.04 OPERATION AND MAINTENANCE TRAINING

A. Upon completion of the work, and after all tests and final inspection of the work by the Authority Having Jurisdiction (AHJ), the Fire Protection Contractor shall demonstrate and instruct the Owner's designated operation and maintenance personnel in the operation and maintenance of the various fire protection systems.

B. The Fire Protection Contractor shall arrange for scheduled instruction periods with the Owner.

C. The Fire Protection Contractor’s representatives shall be Superintendents or Foremen knowledgeable in each system and Supplier's Representative when so specified.

D. All drain locations and inspector’s test locations shall be shown in addition to showing the access required to obtain the valves.

E. A general description of each fire protection system shall be demonstrated including the following.

1. Step-by-step procedure to follow shutting down each fire protection system.

2. Step-by-step procedure to follow putting each fire protection system back into operation.

3. Dry system air compressor locations and procedure for replacement.

F. Scheduled instruction periods shall be based upon the complexity of the systems installed, but in no case, be less than the following:

Underground Systems	1 Hour
Water Based Fire Protection Systems:	2 Hours for each system type

G. Costs for time involved by the Fire Protection Contractor shall be included in the bid.

3.05 FIRE PROTECTION CONTRACTOR'S RESPONSIBILITY FOR NEW BUILDINGS

A. The Fire Protection Contractor shall bear expense of cutting, patching, painting, repairing, and replacing of work of other trades that are required because of the Fire Protection Contractors fault, error, tardiness, or because of damage caused by the fire protection installation.

B. All fire protection sprinkler system components, devices, and materials installed as part of this project shall be new and free of corrosion or rust.

3.06 INSTALLATION

A. Install fire protection equipment to permit easy access for normal maintenance, and so that parts requiring periodic replacement or maintenance can be readily removed.

B. Design and provide each system with full consideration to blind spaces, piping, electrical equipment, ducts, other construction, and equipment in accordance with detailed working drawings to be submitted to the Architect/Engineer for approval.

C. Provide access doors to access all valves installed in finished areas.

D. If circumstances at a particular location make the accessible installation of an item difficult or inconvenient, the situation shall be discussed with the Architect/Engineer before installing the item in a poor access location.

E. Provide separations between all dissimilar metals with a dielectric connection.

F. Provide offsets around all electrical panels and similar electrical equipment (transformers, main distribution panels, etc.) to maintain the clear space required by Section 110.26.E(1)a of NFPA #70 (National Electrical Code). A 6'-0" clear space is required above all electrical panels or to a structural ceiling, whichever is lower, except where indicated otherwise or required by NFPA #70 (National Electrical Code). Such offsets are typically not shown on the contract documents, but are required to be indicated and installed as part of the installation.

G. All piping and related items installed by the Fire Protection Contractor shall not present a safety hazard (i.e., items installed at/near head height, items projecting into maintenance access paths, or any items that present a tripping hazard etc.) or it will be required to be relocated at no additional cost to the Owner or General Contractor.

H. Access to equipment is of utmost importance. The Fire Protection Contractor shall apply extra attention to the laying out of pipe and in coordinating all work. Poor access to other trade work equipment will not be accepted.

I. Ensure that items to be furnished fit space available. Make necessary field measurements to ascertain space requirements including those for connections and furnish and install equipment of size and shape so final installation shall suit true intent and meaning of contract documents.

J. Install piping in longest reasonable lengths. The use of short lengths of pipe with multiple couplings where a single length of pipe could have been used is not acceptable.

3.07 REQUESTS FOR INFORMATION (RFI)

A. It is our intent to provide a timely response to any Request for Information (RFI) regarding the fire protection work. To further expedite this process, if a suggestion can be determined or derived at by the initiator of the Request for Information (RFI), it is required that this suggestion is supplied with the submitted Request for Information (RFI). If no suggestion is given where one is possible, the RFI will be returned as incomplete.

B. All Fire Protection Request for Information (RFI) questions shall be written on the forms provided in Division 0 or 1 of the General and Supplemental Conditions of the Project Manual.

PART 4 - CONTRACTORS

4.01 PRE-APPROVED FIRE PROTECTION CONTRACTORS

A. The Fire Protection Contractor shall be an approved Fire Protection Contractor or shall be approved by the Architect and Engineer prior to bidding this project. Pre-approved Fire Protection Contractors are as follows:

1. Advanced Fire Protection – Woodinville (425) 483-5657

2. Columbia Fire – Seattle (206) 232-8569

3. Cosco Fire Protection – Tukwila (206) 438-3360

4. Emerald Fire LLC – Gig Harbor (253) 857-2056

5. Fire Sprinklers Incorporated – Sumner (253) 826-0099

6. Knight Fire Protection – Olympia (360) 786-8606

7. Patriot Fire Protection – Tacoma (253) 926-2290

8. Red Hawk Fire Protection – Puyallup (253) 840-9900

9. Shinn Fire Protection – Kent (425) 203-9800

10. Smith Fire Systems – Tacoma (253) 926-1880

11. Viking Automatic Sprinkler Company – Seattle (206) 622-4656

12. Western States Fire Protection – Redmond (425) 881-0100

4.02 FIRE PROTECTION CONTRACTOR QUALIFICATIONS TO BID THIS PROJECT

A. Any Fire Protection Contractor that is not pre-approved shall submit the information contained in the "Fire Protection Contractor Qualifications Form" (3 pages) provided at the back of this Specification Section (as a minimum) for evaluation by the Owner, Architect, and Fire Protection Engineer.

B. Any Fire Protection Contractor that is not pre-approved shall submit the information contained in the "Fire Protection Contractor Qualifications Form" (3 pages) provided at the back of this Specification Section (as a minimum) for evaluation by the Owner, Architect, and Fire Protection Engineer.

C. The Fire Protection Contractor shall follow the approval process and timing identified in Part I of this specification and Division 0 and 1 of the project specifications.

D. The Fire Protection Contractor Qualifications shall be forwarded to the Architect and Fire Protection Engineer prior to the last addendum being released.

E. Fire Protection Contractors that do not meet the minimum qualifications or rejected during evaluation of qualifications will not be allowed on the project.

F. Acceptable Fire Protection Contractors allowed to bid this project will be identified in the last addendum prior to this project bidding.

END OF SECTION

FIRE PROTECTION CONTRACTOR QUALIFICATIONS FORM (PAGE 1 OF 3)

Item #1:

Project Name: _____

Item #2:

Company Name	Telephone Number
Address	E-Mail Address
Branch Office Address (If different)	Individual in Charge
Signature	Title

Item #3:

Date Company Opened: _____

Company History and past Name Changes (10 year minimum):

_____

_____

_____

_____

_____

_____

Item #4:

Attach a "Certificate of Insurance" showing a minimum of $2,000,000 liability insurance.

FIRE PROTECTION CONTRACTOR QUALIFICATIONS FORM (PAGE 2 OF 3)

Item #5:

Provide project name, contact person, and contact number for the 5 most recent projects that your company has designed and installed that are similar in nature to this specific project.

Project #1: _____

Contact Person: _____ Phone Number: _____

Project #2: _____

Contact Person: _____ Phone Number: _____

Project #3: _____

Contact Person: _____ Phone Number: _____

Project #4: _____

Contact Person: _____ Phone Number: _____

Project #5: _____

Contact Person: _____ Phone Number: _____

Item #6:

Design must be by full time "in house" designers/engineers.

Provide documentation for a State of Washington Level III Certificate of Competency holder, a State of Washington Level U Certificate of Competency holder, and resumes of the designers/engineers to be working on this project for the dedicated fire protection underground work.

Provide documentation for a State of Washington Level III Certificate of Competency holder, NICET Level IV certification, and resumes of the designers/engineers to be working on this project for the sprinkler system work.

FIRE PROTECTION CONTRACTOR QUALIFICATIONS FORM (PAGE 3 OF 3)

Item #7:

To achieve maximum quality control of materials and to facilitate meeting project scheduling, second party fabrication (sub-contracted out) will not be allowed. All fabrication shall be performed "In House" and not at an outside fabrication shop. The Fire Protection Contractor's fabrication shop shall contain the following items to qualify as a legitimate fabrication shop and shall be indicated below.

	Yes	No
A full-time, in house, certified welder on staff that meets the requirements of American Welding Standards (AWS) B2.1 and NFPA #13.	☐	☐
Sample of testing reports to be given to owner, generated by the welder to certify the corresponding welds.	☐	☐
The fabrication shop includes a hanger shop for cutting of all hanger materials.	☐	☐
The fabrication shop contains a stationary (floor mounted) threading machine.	☐	☐
The fabrication shop contains a plasma cutter.	☐	☐
The fabrication shop contains a "make-on" machine.	☐	☐

Verification that the Fire Protection Contractor has accurately indicated the above information may be required.

SECTION 21 1123

PRIVATE FIRE SERVICE MAINS

PART 1 - GENERAL

1.01 GENERAL

A. Includes, but not limited to, the following:

1. Provide all material, labor, equipment, design, and services necessary to perform the installation of a private fire service main supplying automatic sprinkler systems from a point 5'-0" outside the building to a supply flange installed in the riser room at approximately 6" above finished floor in accordance with the required and advisory provisions of the latest edition of NFPA #24 accepted by the Authority having Jurisdiction (City of Everett), and project specifications, except as modified herein.

~~2.~~ The Fire Protection Underground Contractor shall install the private service main per the latest edition of NFPA #13 and NFPA #24 accepted by the Authority having Jurisdiction.

3. The Fire Protection Underground Contractor shall obtain a permit and final approval from City of Everett for the private service main underground installation. All permits, fees for plan review, inspections, testing, etc. shall be included in the bid proposal.

4. **The Fire Protection Underground Contractor shall simultaneously submit shop drawings and manufacturer's data sheets to the local Authority Having Jurisdiction and Architect/Engineer for review and shall be approved by the Architect/Engineer prior to the purchase, fabrication, or installation of any system component as detailed in Paragraph 1.05 of Specification Section 21 1123. The Architect/Engineer submittal drawings shall be stamped and signed by the appropriate Contractors performing the design and installation of the fire protection underground supply.**

5. **If another Contractor is performing the underground installation from the supply flange left approximately 6" above finished floor to a point 5'-0" outside of the buildings footing, it shall be submitted by that Contractor to the Architect/Engineer for review prior to any of the underground being purchased, fabricated, or installation of any system components.**

6. All fire protection underground equipment installed shall be by a manufacturer contained within "PART 2 – PRODUCTS" of this specification unless prior approval has been received for "Requests For Substitution" following the guidelines set forth in Specification Section 21 0000 paragraphs 1.09 and 2.01.

7. Fire Protection Underground Contractor shall perform asphalt cutting, trenching, select fill, asphalt patching, and pipe restraining required for proper installation of the new private fire service mains.

8. **The Fire Protection Underground Contractor shall provide a copy of the "Underground Test Certificate" to the Architect/Engineer for review and shall be approved by the Architect/Engineer prior to the overhead fire protection piping being connected to the underground piping. The "Test Certificate" shall be completely filled out and shall indicate the method used for flushing, standard the system was flushed in accordance with, and shall be signed by the Authority having Jurisdiction who witnessed the flushing test.**

1.02 RELATED DOCUMENTS

A. Drawings, General Conditions and Supplementary Conditions of the Contract, including Division 0 and Division 1 Specification Sections apply to work of this Division.

1.03 RELATED SECTIONS

A. The following sections apply to this section:

1. Section 21 0000 "GENERAL FIRE PROTECTION REQUIREMENTS".

2. Section 21 1313 "WET PIPE AUTOMATIC SPRINKLER SYSTEMS"

3. Section 21 1316 "DRY PIPE AUTOMATIC SPRINKLER SYSTEMS"

1.04 GENERAL SYSTEM REQUIREMENTS

A. _____

B. The Fire Protection Underground Contractor shall coordinate with a locate company prior to beginning any excavation work. The Fire Protection Underground Contractor shall include all fees associated with the "locate" in the bid.

C. The underground supply piping shall be provided with a concrete thrust block at all changes of direction and at the elbow where the pipe turns from a horizontal installation to vertical installation.

D. The elbow located under the building on the fire protection underground supply piping shall also be provided with rodding as a second means of restraint. The elbow shall be rodded to the flange above finished floor in the vertical direction and rodded to the first joint outside of the buildings footing in the horizontal direction.

E. The minimum Fire Protection Underground supply pipe size shall be 6", but shall be based upon the hydraulic calculation demands of the fire protection system being installed in the building by the project fire protection engineer.

F. The Fire Protection Underground supply piping shall:

1. Be installed a minimum of 1'-0" below the bottom of the foundation / footing to the top of the piping.

2. Be installed a maximum distance of 10'-0" from the outside edge of foundation / footing to the centerline of the vertical supply piping penetrating the floor slab.

G. If allowed by the local Authority Having Jurisdiction, the minimum depth of cover shall be no less than 3'-0" at finish grade. Otherwise, the minimum depth of cover shall be based upon Figure A.10.4.2(a) of the 2016 edition of NFPA #13 and NFPA #24, with the minimum depth of cover being no less than 4'-0" at finish grade.

H. The underground piping shall terminate with a flange left 6" above finished floor.

I. The supply flange shall be two-holed with respect to the back wall (the two closest flange holes to the back wall shall be at the same distance from the back wall) to assure that the sprinkler system riser will be aligned parallel with the back wall.

1.05 SUBMITTALS

A. See Specification Section 21 0000 Paragraphs 1.09 and 2.01 for "Submittal" requirements.

B. Follow the guidelines set forth in Specification Section 21 00 00 Paragraphs 1.09 and 2.01 for "Requests For Substitution" procedures. Product substitution during installation from the approved Equipment Submittals will not be allowed and shall result in the removal and re-installation of system components at no additional cost to the Owner.

C. Equipment submittal tabs shall include, at a minimum, the following:

1. Piping

2. Fittings / Couplings

3. Miscellaneous Equipment

D. Equipment submittals shall include all materials, components, and devices being installed. The items contained in the following list are typically included in a Private Fire Service Main System installation and would require equipment submittal literature to be provided.

1. Piping (Potable and Non-Potable)

2. Couplings / Fittings (Flanged, Grooved, Mechanical Joint, Etc.)

3. Buried Utility Warning and Identification Tape

E. Follow the guidelines set forth in Specification Section 21 0000 Paragraph 1.09 for submittal requirements of the following:

1. Equipment Submittals

2. Shop Drawings

3. Thrust Block Calculations

4. Qualifications

F. Submit all test results identified in "Part 3 – Execution" of Specification Section 21 1123 for review and/or approval.

G. All re-submitted drawings shall have the areas of revision clearly marked with revision clouds.

1.06 QUALIFICATIONS

A. Design and installation of the Underground System shall be in compliance with Section 212.80.018 of the "Washington Administrative Code" (WAC).

B. The installing Fire Protection Underground Contractor shall have a minimum of five (5) years' experience in the design, installation and testing of private fire service mains.

1.07 PIPING SYSTEM LAYOUT

A. Prepare detailed working drawings that are not larger than the contract documents for the system layout in accordance with NFPA #13, "Working Drawings (Plans)." Show data essential for the proper installation of each fire protection underground system per NFPA #13 and NFPA #24.

B. The cover sheet of the shop drawings shall contain a site plan (1" = 50'-0" minimum) that clearly shows all fire service main routing with size and type of pipe indicated, fire hydrant locations, fire department connection location, devices, valves, and fittings, regardless of who performed the underground work.

C. A graphical scale shall be provided for each floor plan or detail on the shop drawings in accordance with NFPA #13, "Working Drawings (Plans)".

D. The minimum text size on full scale drawings shall be 1/8" high.

E. The cover sheet of the shop drawings shall clearly state the scope of Contractor's work, Contractor's exclusions, Contractor's start point, which edition of NFPA #13 and NFPA #24 was used for the private fire service main design, and current water flow information.

1.08 UNDERGROUND MAXIMUM PRESSURE LOSS REQUIREMENTS

A. The pressure loss associated with the fire protection underground supply shall not exceed that allowed by NFPA #13 and NFPA #24.

PART 2 - PRODUCTS

2.01 PRIVATE FIRE SERVICE MAIN PIPING SYSTEMS

A. All fire protection system components, devices, and materials installed as part of this project shall be new.

B. **All fire protection underground components and devices shall be domestically manufactured. Imported components will not be allowed.**

2.02 PRIVATE FIRE SERVICE MAIN PIPE AND FITTINGS

A. All underground system piping and fittings shall meet the following criteria:

1. Underground Supply Piping from the Supply Flange Left Approximately 6" Above Finished Floor to a point 5'-0" Outside the Building Footing: Provide cement mortar lined Class 52 ductile iron piping. If acceptable by the Authority Having Jurisdiction, AWWA standard bell and spigot Class 150 ductile iron piping, C-900 Class 200 DR14 U.L. labeled PVC pipe, or type 304 or 316 stainless steel piping may be installed. All fittings shall be U.L. listed, or F.M. approved for fire protection installations, shall utilize full flow standard radius fittings, and shall match the type of underground piping to be installed.

   a. Galvanized Steel Pipe: AMS Tube Corporation, Bull Moose Tube Company, Charlotte Pipe and Foundry Company, North West Pipe and Casing, State Pipe and Supply Company, Wheatland Tube Company, or prior approved equal.

b. Grooved Products: Gruvlok, Tyco, Victaulic, or prior approved equal.

c. Flanged Products: American Cast Iron Pipe Company, Anvil International, Merit Manufacturing (Mueller), Trinity Valley Iron & Steel Company, Pacific Coast Flange Incorporated, Tyler Pipe, Union Foundry Company, U.S. Pipe and Foundry Company, Ward, or prior approved equal.

d. Mechanical Joint Fittings and Retainer Glands: American Cast Iron Pipe Company, Ford Meter Box Company, Tyler Pipe, U.S. Pipe and Foundry Company, or prior approved equal.

e. Ductile Iron Pipe: American Cast Iron Pipe Company, Pacific States Cast Iron Pipe Company, U.S. Pipe and Foundry Company, or prior approved equal.

f. Mechanical Joint Products: American Cast Iron Pipe Company, EBBA Iron Incorporated, Pacific States Cast Iron Pipe Company, U.S. Pipe and Foundry Company, or prior approved equal.

g. P.V.C. Pipe: Diamond Plastics Corporation, Johns Manville (Blue Brute), North American Pipe Corporation, PW Pipe, or prior approved equal.

h. Stainless Steel Fittings: Ames, Anvil International, Greensboro Pipe Company, Merit Brass, Victaulic, or prior approved equal.

i. Stainless Steel Pipe: Alaska Copper and Brass, American Pipe and Supply, Ames, Greensboro Pipe Company, Merit Brass, or prior approved equal.

2.03 BURIED UTILITY WARNING AND IDENTIFICATION TAPE

A. Provide electronically detectable 12 AWG solid core copper wire in an aluminum foil plastic backed tape or electronically detectable magnetic plastic tape manufactured specifically for warning and identification on all buried piping.

B. Install identification tape in accordance with US Department of Transportation Gas Pipeline Safety Standards in 49 CFR 92.321.

C. Identification tape shall be continuous and installed immediately above the underground piping over the entire length of the underground piping.

D. Provide identification tape that has a 3" minimum width roll, a minimum of 4 mil thick, and color coded for the utility involved. Identification tape shall have bold black letters imprinted with "CAUTION BURIED WATER PIPING BELOW" or similar wording continuously and repeatedly over entire tape length.

E. Use permanent code and letter coloring unaffected by moisture and other substances contained in trench backfill material.

F. Approved manufacturers are as follows:

1. Buried Utility Warning and Identification Tape: Pro-Line Safety Products Company, Tek Identification Products, or prior approved equal.

PART 3 - EXECUTION

3.01 INSTALLATION OF UNDERGROUND PIPING SYSTEMS

A. Installation, workmanship, fabrication, assembly, erection, examination, inspection, and testing shall be in accordance with NFPA #13 and NFPA #24, except as modified herein.

B. A list of installations of a similar nature and scope shall be provided on request.

C. All piping and fittings installed prior to the backflow preventer are considered part of the potable water system and shall be required to be of a type that maintains a clean and rust free potable system. The use of black and galvanized pipe and fittings on the potable waterside of the backflow preventer will not be allowed.

D. The Fire Protection Underground Contractor shall be responsible for the design, material, fabrication, workmanship, assembly, examination, testing, and certification that the underground installation meets local and NFPA codes.

E. The Fire Protection Underground Contractor shall remove and replace any piping joints deemed improperly installed or show signs of leakage.

3.02 FLUSHING OF UNDERGROUND PIPING

A. Flush potable piping installed prior to the backflow preventer with potable water in accordance with NFPA #13 at a minimum velocity of 10 feet per second, based upon the actual internal diameter of piping being flushed.

B. The flushing of fire protection underground piping shall consist of the following:

1. The Fire Protection Underground Contractor providing burlap bags to the discharge of all hoses used to flush the fire protection underground piping to collect debris and/or foreign matter.

2. Flush the underground piping for a sufficient time to ensure thorough cleaning and removal of all debris and/or foreign matter.

3. At completion of the flush, the burlap bags shall be removed and inspected for the accumulation of debris and/or foreign matter.

4. If debris and/or foreign matter is found in the burlap bag, the flushing test shall be performed again until debris and/or foreign matter is not found.

5. After the fire protection underground piping has been successfully flushed, the Fire Protection Underground Contractor shall take pitot readings from the discharge of all hoses used to flush the fire protection underground piping to verify the actual flow rate and velocity.

6. If the pitot values indicate that the volume of water used during flushing is below the minimum values stated above, an additional outlet shall be opened up and the flushing test started over.

7. If the pitot values indicate that the volume of water used during flushing is above the minimum values stated above, the flushing test is acceptable.

C. The Fire Protection Underground Contractor shall provide all equipment and instruments necessary to take pitot readings consisting of 2½" hoses for each required outlet, stream straighteners, hose monsters, and/or pitots with calibrated pressure gauges.

D. When the flushing test has been successfully completed at the minimum required flow rate, submit a signed and dated certificate similar to that specified in NFPA #13 and NFPA #24 To the Fire Protection Engineer for review and/or approval.

3.03 PURITY TESTING OF PIPING INSTALLED BEFORE BACKFLOW PREVENTION DEVICE

A. Disinfect the new water supply piping affected by Fire Protection Underground Contractor's operations in accordance with the health authority, water purveyor having jurisdiction and AWWA C651.

3.04 WIRE AND MARKING TAPE TO LOCATE PIPING

A. Install marking tape at an elevation approximately 1'-0" above the underground piping. Install a continuous 12-gauge copper wire (where required by the Authority Having Jurisdiction) to the topside of all underground piping.

3.05 HYDROSTATIC TEST

A. Hydrostatically test each system at 200 P.S.I. or 50 P.S.I. in excess of the systems working pressure (whichever is greater), for a 2-hour period.

B. The amount of leakage at the joints shall not exceed the limits allowed in NFPA #13 and NFPA #24.

C. When tests have been completed and corrections made, submit a signed and dated certificate similar to that specified in NFPA #13 and NFPA #24.

3.06 INITIAL BACKFILL MATERIAL

A. Initial backfill consists of select granular material or satisfactory materials free from rocks 1/2" or larger in any dimension or free from rocks of such size as recommended by the pipe manufacturer, whichever is smaller.

B. When the pipe is coated or wrapped for corrosion protection, the initial backfill consists of select granular material or satisfactory materials free from rocks 1/4" or larger in any dimension or free from rocks of such size as recommended by the pipe manufacturer, whichever is smaller.

3.07 OFFSITE SOILS REQUIREMENTS

A. Do not bring material onsite until approved test results are submitted to the Architect/Engineer for review and acceptance.

3.08 INITIAL BACKFILLING AND COMPACTION

A. Backfill the trench to the top of pipe prior to performing the required hydrostatic pressure test.

B. Leave the joints and couplings uncovered during the pressure test.

1. Replacement of Unyielding Material: Replace unyielding material removed from the bottom of the trench with select granular material or initial backfill material.

2. Replacement of Unstable Material: Replace unstable material removed from the bottom of the trench or excavation with select granular material placed in layers not exceeding 6" loose thickness.

C. Place initial backfill material and compact it with approved tampers to a height of at least 1'-0" above the water piping.

D. Bring up the backfill evenly on both sides of the pipe for the full length of the pipe.

E. Take care to ensure thorough compaction of the fill under the haunches of the pipe.

F. Except as specified otherwise in the individual piping section, provide bedding for buried piping in accordance with AWWA C600, Type 4, except as specified herein.

G. Compact backfill to top of pipe to 95 percent of ASTM D 698 maximum density.

H. Provide plastic piping with bedding to spring line of pipe.

I. Provide materials as follows:

1. Class I: Angular, 6 to 40 mm 0.25 to 1.5 inch, graded stone, including a number of fill materials that have regional significance such as coral, slag, cinders, crushed stone and crushed shells.

2. Class II: Coarse sands and gravels with maximum particle size of 1½", including various graded sands and gravels containing small percentages of fines, generally granular and noncohesive, either wet or dry. Soil Types GW, GP, SW, and SP are included in this class as specified in ASTM D 2487.

3. Clean coarse-grained sand in accordance with industry standard methods and procedures.

4. Clean, coarsely graded natural gravel, crushed stone or a combination thereof in accordance with industry standard methods and procedures. Do not exceed maximum particle size of 3".

3.09 FINAL BACKFILLING AND COMPACTION

A. Fill the remainder of the trench with satisfactory material.

B. Place backfill material and compact as follows:

1. Sidewalks, Turfed or Seeded Areas and Miscellaneous Areas: Deposit backfill in layers of a maximum of 1'-0" loose thickness, and compact it to 85% maximum density for cohesive soils and 90% maximum density for cohesionless soils. Water flooding or jetting methods of compaction for granular noncohesive backfill material will be allowed, provided the water jetting does not penetrate the initial backfill.

3.10 TRENCH SHORING

A. Where trench excavation equal or exceeds a depth of 4'-0", the contractor shall provide, construct, maintain and remove, as required, safety systems that meet the requirements of the Washington Industrial Safety and Health Act.

B. A qualified individual shall design the trench safety system that meets all applicable local, state, and federal safety code.

C. The Contractor shall adequately shore trenches to protect the work, existing property, utilities, pavement, etc., and to provide safe working conditions in the trench.

D. The method of shoring shall be according to the contractor's design. The contractor may elect to use a combination of shoring, trench shields, or other methods of accomplishing the work.

3.11 DEWATERING OF TRENCH

A. Where water is encountered in the trench, it shall be removed during pipe-laying operations and the trench so maintained until the ends of the pipe are sealed and provisions are made to prevent floating of the pipe.

B. Trench water, bedding material, or other foreign materials shall not be allowed to enter the pipe at any time.

C. The contractor shall furnish, install, and operate all necessary equipment to keep the trench above the foundation level free from water during construction, including power outages and shall dewater and dispose of the water so as not to cause injury to public or private property.

3.12 DISPOSITION OF SURPLUS MATERIAL

A. The fire protection underground Contractor shall haul away all surplus material or other soil material that is not required or suitable for filling or backfilling including brush, refuse, stumps, roots, and timber.

3.13 FORMAL TESTS AND INSPECTIONS

A. Do not submit a request for formal test and inspection until the preliminary test and corrections are completed and approved.

B. An experienced technician regularly employed by the system installer shall be present during the inspection.

C. At this inspection, repeat any or all of the required tests as directed.

D. Correct defects in work provided by the Fire Protection Underground Contractor and make additional tests until the system(s) comply with contract requirements.

E. Furnish appliances, equipment, electricity, instruments, connecting devices and personnel for the tests.

F. The Owner will furnish water for the tests.

G. Furnish Architect with three (3) copies of certificates required by testing agencies.

END OF SECTION

SECTION 21 1313

WET PIPE AUTOMATIC SPRINKLER SYSTEMS

PART 1 - GENERAL

1.01 GENERAL

A. Includes, but not limited to, the following:

1. Provide all material, labor, equipment, design, and services necessary to perform the installation of wet pipe automatic fire protection sprinkler system(s) for complete fire protection coverage throughout, in accordance with the required and advisory provisions of the latest edition of NFPA #13 accepted by the Authority having Jurisdiction (City of Everett), and project specifications, except as modified herein.

2. The Fire Protection Sprinkler System Contractor shall obtain a permit and final approval from City of Everett for the fire protection sprinkler system. All permits, fees for plan review, inspections, testing, etc. shall be included in the bid proposal.

3. **The Fire Protection Sprinkler System Contractor shall simultaneously submit shop drawings, hydraulic calculations, seismic bracing calculations, and manufacturer's data sheets to the local Authority Having Jurisdiction and Architect/Engineer for review and shall be approved by the Architect/Engineer prior to the purchase, fabrication, or installation of any system component as detailed in Paragraph 1.13 of Specification Section 21 1313.**

4. All fire protection equipment installed shall be by a manufacturer contained within "PART 2 – PRODUCTS" of this specification unless prior approval has been received for "Requests For Substitution" following the guidelines set forth in Section 21 0000 Paragraphs 1.09 and 2.01.

1.02 RELATED DOCUMENTS

A. Drawings, General Conditions and Supplementary Conditions of the Contract, including Division 0 and Division 1 Specification Sections apply to work of this Division.

1.03 RELATED SECTIONS

A. The following sections apply to this section:

1. Section 21 0000 "GENERAL FIRE PROTECTION REQUIREMENTS".

2. Section 21 1123 "PRIVATE FIRE SERVICE MAINS"

3. Section 21 1316 "DRY PIPE AUTOMATIC SPRINKLER SYSTEMS"

1.04 GENERAL SYSTEM REQUIREMENTS

A. Notify the Architect, Fire Protection Engineer, General Contractor, and building Owner to coordinate the pre-design meeting stated in Section 21 0000 Paragraph 1.01.E.

B. _____
_____
_____
_____
_____
_____
_____

C. The sprinkler riser detail shown on the contract documents is conceptual in nature with the minimum quantity and types of sprinkler risers being required for this project. Actual quantity and types of system risers required for this project shall be determined by the Fire Protection Sprinkler System Contractor. If additional system risers are necessary, the Fire Protection Sprinkler System Contractor shall include them in their scope of work, prior to bidding.

D. A table shall be placed adjacent to the fire protection sprinkler system riser detail that indicates the actual "Floor Area" protected by each system riser on each floor of the building it serves.

E. Devices and equipment for fire protection service shall be U.L. listed or Factory Mutual Global approved for use in wet pipe sprinkler systems.

F. **All H.V.A.C. mechanical units and associated ductwork larger than 10" shall be shown on the drawings as part of the backgrounds.**

G. All H.V.A.C grilles, electrical lights, and fire alarm devices that are to be installed at the ceiling level shall be shown on the submittal drawings to verify sprinkler placements.

1.05 LOCATION OF SPRINKLERS

A. Sprinklers located in acoustical ceiling tiles shall be installed in a consistent pattern, centered both directions within the ceiling tiles (12" from a ceiling grid), and placed to avoid all lights, air diffuser grilles, and obstructions.

B. Sprinklers located in rooms that contain entire gypsum wallboard ceilings shall be installed in a consistent pattern within the gypsum wallboard ceiling and placed to avoid all surface mounted lights, air diffuser grilles, and obstructions.

C. Sprinklers located in soffits shall be installed in a consistent pattern and placed to avoid all lights (surface mounted and/or recessed), air diffuser grilles, and obstructions.

D. Sprinklers in exposed areas shall be installed in a consistent pattern while avoiding all lights, ductwork, and structural members.

E. All semi-recessed sprinklers shall be installed in such a manner that the deflector distance shall be within ½" of each other as measured from the ceiling. Sprinklers that are determined to be installed outside of this installation range shall be modified to meet these criteria.

F. All semi-recessed sprinklers shall be installed in such a manner that the center part of the escutcheon that is attached to the sprinkler does not protrude beyond the trim ring that conceals the ceiling or wall penetration.

G. All pendent sprinklers with 2-piece escutcheons shall be installed in such a manner that the deflector distances shall be within ½" of each other as measured from the ceiling. Sprinklers that are determined to be installed outside of this installation range shall be modified to meet these criteria.

H. Sprinklers shall be installed within ceiling pockets where required by NFPA #13.

I. Sprinklers shall be installed in skylights where required by NFPA #13.

J. All semi-recessed and pendent sprinklers installed below a ceiling within each room shall have the frame arms aligned parallel to each other. Multiple sprinklers installed in a single room shall not be allowed to have the frame arms not parallel to each other.

K. All upright sprinklers shall be installed with the frame arms parallel to the branch line.

L. Fire Protection Sprinkler System Contractor shall provide 1" threaded outlets in a symmetrical pattern that does not exceed 100 square feet in the unfinished tenant improvement areas. The 1" threaded outlets shall be provided with either 1" plugs or a 1" nipple, 1"x½"x1" threaded tee with a 1" threaded plug in the bullhead outlet, and an upright sprinkler head. The 1" plugs shall be used to serve future drops to pendent sprinkler heads in the unfinished tenant improvement areas when a new lowered ceiling is installed.

M. The "Area of Coverage" per sprinkler installed beneath roll back garage style doors shall be based upon the occupancy classification of the floor area beneath the roll back garage style door, not Light Hazard Occupancy as indicated by NFPA #13.

N. Spacing of sprinklers shall not exceed that permitted by NFPA #13 for occupancy, except where the Fire Protection Sprinkler System Contractor elects to utilize extended coverage sprinklers.

1.06 WATER DISTRIBUTION

A. Sprinkler discharge shall be uniform throughout the area in which the sprinklers will open. Discharge from individuals in the hydraulically most remote area shall be at a minimum of 100% the specified density.

1.07 SPRINKLER DENSITY AND DISCHARGE AREA OF OPERATION

A. Size piping to provide the required density when the system is discharging over the entire most demanding area.

B. Using the "Pipe Schedule" method to determine pipe sizing will not be allowed.

C. Basing hydraulic calculations upon the "Room Design" method to determine pipe sizing will not be allowed.

D. Application rates to horizontal surfaces below the sprinklers (floor area) shall be 0.10 g.p.m. per square feet over the hydraulically most demanding 1,500 square feet for light hazard occupancy (Classrooms, Offices, Restrooms, Corridors, Conference Rooms, Gymnasiums, Hallways, Multi-purpose Rooms, Break Rooms, Libraries, combustible ceiling voids, combustible attic spaces, _____ and dry sprinkler coverage under exterior canopies or overhangs).

E. Application rates to horizontal surfaces below the sprinklers (floor area) shall be 0.15 g.p.m. per square feet over the hydraulically most demanding 1,500 square feet for ordinary hazard group I occupancy (Mechanical Areas, Automobile Parking Areas, Laundry Rooms, Janitor's Rooms, Custodian Rooms, _____and Kitchen Service Areas).

F. Application rates to horizontal surfaces below the sprinklers (floor area) shall be 0.20 g.p.m. per square feet over the hydraulically most demanding 1,500 square feet for ordinary hazard group II occupancy (Electrical Rooms, MDF Rooms, Mercantile Areas, Fire Sprinkler Rooms, Lab Rooms, Stages, Elevator Machine Rooms, Elevator Shafts, dry sprinkler coverage under exterior canopies or overhangs over Loading Docks and Receiving Areas, _____and Storage Rooms).

G. A reduction in remote area may be used where quick response sprinklers are utilized in light or ordinary hazard occupancy where there are no unprotected ceiling pockets and the maximum ceiling height is 20'-0".

H. When sloped ceilings or roofs are present and the slope exceeds 2" per foot, the remote area shall be increased by 30%.

I. For buildings having unsprinklered combustible spaces (including areas used for roof venting), the minimum area of sprinkler operation shall be 3,000 square feet after all other remote area modifications have been made. The design area of 3,000 square feet shall be applied only to the sprinkler system or portions of the sprinkler system that are adjacent to (space above, below, or next to) the qualifying combustible concealed space.

J. Sprinklers under a roof or ceiling in combustible concealed spaces of wood joist, wood truss, or TJI construction with framing members less than 3'-0" on center with a slope having a pitch of 4 in 12 or greater shall follow all of the following:

1. The sprinkler spacing shall not exceed 120 square feet.

2. The dimension perpendicular to the roof slope shall not exceed 10'-0".

3. A row of sprinklers shall be located within 1'-0" horizontally of the peak

4. Sprinkler deflector shall be between 1" and 12" below the top chord member

5. Sprinklers along the eave are located not less than 5'-0" from the intersection of the upper and lower truss chords or wood rafters and ceiling joists.

6. When the dimension perpendicular to the roof slope exceeds 8'-0", the minimum end head pressure shall be 20 p.s.i.

7. The requirements of 5 and 6 above shall not apply to sprinklers installed at the corner of the eave of a hip type roof where located directly under the hip line located along the eave spaced on the slope plane not less than 5'-0" from the intersection of the upper and lower truss chords or the wood rafters and ceiling joists.

8. These requirements shall not apply when the exposed combustible sheathing in the roof or ceiling space are constructed of pressure impregnated fire retardant–treated wood.

1.08 HOSE STREAM ALLOWANCES

A. Hose stream allowances for hydraulic calculations shall be per NFPA #13.

B. Light hazard occupancy shall require 100 g.p.m. combined hose streams.

C. Ordinary hazard occupancy shall require 250 g.p.m. combined hose streams.

1.09 PIPE C-VALUES FOR CALCULATING FRICTION LOSSES

A. Calculate losses in piping in accordance with Hazen-Williams equation using a 'C' value of:

1. 100 for unlined cast iron or unlined ductile iron.

2. 120 for black steel wet systems or galvanized steel wet systems.

3. 140 for cement lined cast iron, cement lined ductile iron, asbestos cement, or concrete.

4. 150 for listed P.V.C., CPVC, copper tube, or stainless steel.

1.10 WATER SUPPLY

A. Base hydraulic calculations (for the bid) on a fire flow report form for the parcel adjacent to this project (1410 Seiner Dr.) dated November 15, 2022 indicating 99 p.s.i. static pressure with a residual pressure of 81 p.s.i. while flowing 2,687 g.p.m. Test hydrant elevation is 9.01 feet Flow test information provided by City of Everett.

B. After award of the project, the Fire Protection Sprinkler System Contractor shall verify available water supply with a flow test or flow test model recorded within six months of bid date. If a new flow test is required, the Fire Protection Sprinkler System Contractor shall coordinate with local authorities for a new flow test and the fees associated with a new flow test shall be included in the bid. Information obtained from this flow test and indicated on the drawings shall be: test hydrant static pressure, test hydrant residual pressure, associated pitot reading from flowing hydrant, test hydrant location, test hydrant elevation, and underground water main configuration.

1.11 PIPE HANGER DETAILS

A. Provide pipe hanger details and seismic bracing details in strict accordance with NFPA #13 and manufacturer's literature.

B. Details shall be unique to each installation configuration with all components clearly identified including the means of attachment and structure to be attaching to.

C. For all trapeze hangers, provide a table indicating the size of the pipe to be supported, size and type of the trapeze member, section modulus of the trapeze member, distance from the structure to pipe being supported (A and B dimensions), and the section modulus required. Per NFPA #13 each component of the trapeze hanger assemble shay be sized per the sprinkler pipe being supported.

1.12 SEISMIC BRACING

A. Calculations.

1. Seismic brace calculation requirements shall be based upon Section 1613.1 of the 2018 Edition of the International Building Code (I.B.C.) and Chapter 13 of ASCE 7-10.

2. The "General Notes" sheets for the structural drawings contained in the contract documents define the "Seismic Design Category" for this project.

3. Per Section 13.6.8.2 of ASCE 7-10, fire protection sprinkler piping, pipe hangers, and bracing designed and constructed in accordance with NFPA #13 shall be deemed to meet the force and displacement requirements of this section.

4. Provide seismic calculations for each seismic brace configuration showing the total calculated load, size of bracing material, type of bracing material, length of bracing material, seismic brace design angle, allowable load of the bracing component, allowable horizontal bracing load of the sprinkler system, structure for bracing connection, size of fastener, length of fastener, allowable load per fastener, and the number of braces required.

5. Each seismic brace configuration shall have a unique identifier associated with the calculation to easily and readily identify which seismic brace calculation it is.

6. Seismic bracing members for connections to structural members shall be sized per assigned load tables in NFPA #13 with a maximum L/R ratio of 200.

7. **The "Total Calculated Load" divided by the "Allowable Load per Fastener" shall not exceed a maximum value of 0.90.**

B. Drawings.

1. The submittal drawings shall identify the "Zone of Influence" for each seismic brace configuration that is provided with a seismic brace calculation.

2. The submittal drawings shall identify each seismic brace on the submittal drawings by the same unique identifier indicated in the seismic brace calculations to easily and readily cross reference the seismic brace calculation associated with that particular seismic brace.

C. Details.

1. Seismic bracing details may be incorporated into the seismic bracing calculations to form a single detail for each brace configuration.

2. The seismic brace details shall identify the seismic brace member, length of brace member, angle of brace member installation, the structural member the seismic brace is attaching to, the fastener to be utilized, and all seismic brace components by Manufacturer and model number.

1.13 SUBMITTALS

A. See Specification Section 21 0000 Paragraphs 1.09 and 2.01 for "Submittal" requirements.

B. Sprinklers shall be referred to in the equipment submittals by the sprinkler identification or model number as specifically published in the appropriate agency listing or approval. Trade names or other abbreviated designations shall not be allowed.

C. Follow the guidelines set forth in Specification Section 21 0000 Paragraphs 1.09 and 2.01 for "Requests For Substitution" procedures. Product substitution during installation from the approved Equipment Submittals will not be allowed and shall result in the removal and re-installation of system components at no additional cost to the Owner.

D. Equipment submittal tabs shall include, at a minimum, the following:

1. Piping
2. Fittings / Couplings
3. Sprinklers and Accessories
4. Backflow Preventers
5. Fire Department Connections
6. Valves
7. Electrical / Fire Alarm Components
8. Pipe Hangers
9. Seismic Bracing Components
10. Access Doors
11. Miscellaneous Equipment

E. Equipment submittals shall include all materials, components, and devices being installed. The items contained in the following list are typically included in a Wet Pipe Automatic Sprinkler System installation and would require equipment submittal literature to be provided.

1. Piping (Potable and Non-Potable)
2. Fittings / Couplings (Flanged, Grooved, Threaded, Etc.)
3. Sprinklers / Head Guards
4. Backflow Preventers
5. Fire Department Connections
6. Hose Valves for Full Forward Flow testing of the Backflow Preventer
7. Valves
8. Shotgun Riser Assemblies
9. Flow Switches
10. Tamper Switches
11. Inspector's Test Assemblies
12. Flexible Piping Serving Pendent Sprinklers
13. Seismic Separation Assemblies
14. Pipe Hangers
15. Seismic Bracing Components
16. Pressure Relief Valves
17. Water Pressure Gauges
18. Automatic Air Vents
19. Access Doors
20. Oversized Escutcheon Trim Rings

F. Follow the guidelines set forth in Section 21 0000 Paragraph 1.09 for submittal requirements of the following:

1. Equipment Submittals

2. Shop Drawings

3. Hydraulic Calculations

4. Seismic Brace Calculations

5. Contractor Qualifications

G. Submit all test results identified in "Part 3 – Execution" of Section 21 1313 for review and/or approval.

H. All re-submitted drawings shall have the areas of revision clearly marked with revision clouds.

1.14 QUALIFICATIONS

A. Design and installation of Fire Protection Sprinkler Systems shall be in accordance with Section 212.80.018 of the "Washington Administrative Code" (WAC).

B. The installing Fire Protection Sprinkler System Contractor shall have a minimum of five (5) years' experience in the design, installation, and testing of wet pipe automatic fire protection sprinkler systems, or similar fire protection systems. A list of installations of a similar nature and scope shall be provided on request.

1.15 PIPING SYSTEM LAYOUT

A. Prepare detailed working drawings that are not larger than the contract documents for the system layout in accordance with NFPA #13, "Working Drawings (Plans)." Show data essential for the proper installation of each fire protection sprinkler system per NFPA #13 consisting of floor plans (1/8" = 1'-0" minimum), building sections, piping details, and elevations to clearly show pipe routing, sprinkler spacings, system water supply, devices, valves, and fittings.

B. The cover sheet of the shop drawings shall contain a site plan (1" = 50'-0" minimum) that clearly shows all fire service main routing with size, type, and length of pipe indicated, fire hydrant locations, fire department connection location, devices, valves, and fittings, regardless of who performed the underground work.

C. A graphical scale shall be provided for each floor plan or detail on the shop drawings in accordance with NFPA #13, "Working Drawings (Plans)".

D. The minimum text size on full scale drawings shall be 1/8" high.

E. The cover sheet of the shop drawings shall clearly state the scope of Contractor's work, Contractor's exclusions, Contractor's start point, sprinkler system design criteria, which edition of NFPA #13 was used for the sprinkler design, sprinkler system design density, remote area size for all occupancies, and current water flow information used in the hydraulic calculations.

F. Projects that require more than one sheet to show the entire fire protection sprinkler system shall require a key plan.

G. The key plan shall be located in the lower right-hand corner of the drawing, shall identify the location of the fire protection sprinkler system that is contained on that sheet, and shall contain a reference north arrow.

H. All sheets shall contain a "Matchline" designation to indicate where the building and fire protection sprinkler system continues, even if on the same sheet.

I. All flexible grooved couplings that are to be installed shall be designated on the drawings and shall meet the requirements of NFPA #13 for vertical and horizontal pipe runs.

J. Sprinklers shall be referred to in the sprinkler legend by the sprinkler identification or model number as specifically published in the appropriate agency listing or approval. Trade names or other abbreviated designations shall not be allowed.

1.16 SPRINKLER SYSTEM DESIGN

A. Hydraulic calculations for the fire protection sprinkler system design are to be based upon the area/density method.

B. Hydraulic calculations shall be performed on a computer utilizing an approved fire protection hydraulics program.

C. Hydraulic calculations performed by hand will not be accepted.

D. Small rooms (closets, restrooms, etc.) contained within the remote area shall be included in the hydraulic calculations. Omission of small rooms will not be allowed.

E. 1" piping shall not serve (2) upright or (2) pendent sprinklers unless hydraulic calculations are provided to verify the pressure losses associated with multiple flows through 1" pipe.

F. An equivalent length of 1'-0" shall be added to the hydraulic calculations for each roll groove installed on the piping and shall be added to the pipe containing the roll groove.

G. An equivalent length of pipe for Flexible Piping Serving Pendent Sprinklers (manufacturer’s submittal literature) shall be added to the hydraulic calculations, shall be added to the pipe containing the Flexible Piping Serving Pendent Sprinklers, and shall be based upon the U.L. listed equivalent lengths documented in the manufacturer’s submittal literature.

H. All changes in piping elevation shall be reflected in the hydraulic calculations at the point in which the elevation change occurs. Adding an accumulated total for elevation at a single point will not be allowed.

I. Hydraulic node numbers shall be unique for each remote area, shall not be duplicated for auxiliary remote areas, shall not be duplicated for other sprinkler systems installed as part of this project, and shall be shown on the submittal drawings.

J. Hydraulic node numbers shall be unique for each reference point and only used once per system. A common reference point for multiple hydraulic calculations shall only have one hydraulic node designation, multiple references to the same hydraulic reference point will not be accepted.

K. An equivalent "K-factor" for sprinkler drops or sprigs (stub-ups) will not be acceptable. The actual "K-factor" of the sprinkler, associated lineal pipe footage, equivalent lineal footage for associated pipe fittings, and elevations shall be part of the main body of the hydraulic calculations. Separate one-line calculations to determine an equivalent "K-factor" that is inserted into the hydraulic calculations will not be acceptable.

1.17 REQUIREMENTS FOR PIPING SERVING ELEVATOR AND ELEVATOR MACHINE ROOMS

A. Provide a control valve for piping serving elevator pits and elevator mechanical rooms.

B. The control valve piping shall consist of a grooved coupling on the supply side of the control valve and shall contain a grooved coupling on the discharge side of the control valve.

C. The control valve piping shall also contain an auxiliary drain outlet with a ball valve.

D. The drain discharge shall be piped to an acceptable location and shall not terminate in the wall.

E. The control valve piping serving elevator pits and elevator mechanical rooms shall be concealed in an interior wall within a recessed access door.

PART 2 - PRODUCTS

2.01 ABOVEGROUND PIPING SYSTEMS

A. Provide fittings for changes in direction of piping and for connections. Make changes in piping sizes through tapered reducing pipe fittings and perform all welding in the shop. Bushings and field welding will not be permitted.

B. Conceal all piping in areas with suspended and hard ceilings.

C. All fire protection system drain pipe and fittings installed outside of the building's thermal envelope shall be galvanized.

D. All fire protection system components, devices, and materials installed as part of this project shall be new.

E. **All fire protection system components and devices shall be domestically manufactured. Imported components will not be allowed.**

2.02 SPRINKLER PIPE AND FITTINGS

A. All above-ground wet pipe automatic sprinkler system pipe and fittings shall meet the following criteria:

1. Threaded: Black and galvanized steel pipe Schedule 40. Piping with a lesser schedule value (thinner walled pipe i.e. "Dyna-Thread", XL, Schedule 10, or other Schedule 40 "Replacement" pipe) will not be allowed for threaded or cut groove connections regardless of the corrosion resistance ratio.

2. Roll Grooved: Black steel pipe either having a minimum wall thickness in accordance with Schedule 10, Schedule 40, or U.L. listed or Factory Mutual Global approved pipe having a U.L. corrosion resistance ratio equal to or greater than 1.0.

3. Grooved Fittings and Couplings: All grooved fittings and couplings shall be manufactured to ASTM A536 requirements for ductile iron castings. The couplings shall consist of two ductile iron housing segments with an elastomer pressure responsive gasket and zinc electroplated bolts and nuts.

   a. Rigid Style Grooved Couplings: All rigid style couplings shall consist of housings casted with an offset, angle pattern bolt pads to provide rigidity and system support. The coupling installation shall be complete at visual, pad–to-pad offset contact. Rigid couplings that require exact gapping of bolt pads at specified bolt torques are not permitted. Grooved couplings that are "Installation-Ready" for direct stab installation without field disassembly are acceptable.

   b. Flexible Style Grooved Couplings: All flexible style couplings shall consist of housings casted with parallel pattern bolt pads to provide flexibility for vibration attenuation, stress relief, or seismic movement. The coupling installation shall be complete at visual, pad–to-pad contact. Flexible couplings that require exact gapping of bolt pads at specified bolt torques are not permitted. Grooved couplings that are "Installation-Ready" for direct stab installation without field disassembly are acceptable.

   c. Gaskets: All gaskets for wet pipe sprinkler systems shall be Grade "E" Type "A" EPDM. All gaskets installed in areas with high ambient temperatures shall be Grade "EHP" EPDM.

d. All grooved couplings and fittings shall be the products of a single manufacturer.

4. All fire protection piping and fittings (above-ground) shall be threaded, grooved, flanged, or welded fittings. The use of plain end, lock-type, friction type, compression type, or any other type of fitting that is plain end ("prepared end", "polished end", beveled end, "FIT" end such as Victaulic "FIT", Gruvlok "Sock-It", Victaulic "Pressfit") is not permitted.

5. Welded Outlets and Drilled Outlets for Mechanical Tees: Use outlets for main, branch line, arm-overs, drops, and sprigs only and shall be U.L. listed or Factory Mutual Global approved. Welded outlets with grooved ends shall have a nominal diameter equal to or smaller than the pipe to which they are attached. Welded outlets with threaded ends and drilled outlets for mechanical tees shall have nominal size outlets at least one pipe diameter smaller than the pipe to which they are attached.

6. Supply Piping From the Flange Above Finished Floor to the Backflow Preventer: Provide cement mortar lined Class 52 ductile iron piping. If acceptable by the Authority Having Jurisdiction, provide AWWA standard bell and spigot Class 150 ductile iron piping, C-900 Class 200 DR14 U.L. labeled PVC pipe, type 304 or 316 stainless steel piping or type K roll grooved drawn copper tubing may be installed. All fittings shall be U.L listed or F.M. approved for fire protection installations, shall utilize full flow standard radius fittings, and shall match the type of underground piping to be installed. Galvanized fittings specifically certified ANSI/NSF 61 are acceptable.

7. Approved manufacturers are as follows:

   a. Black and Galvanized Steel Pipe: AMS Tube Corporation, Bull Moose Tube Company, Charlotte Pipe and Foundry Company, North West Pipe and Casing, State Pipe and Supply Company, Wheatland Tube Company, Youngstown Tube, or prior approved equal.

   b. Threaded Products: Anvil International, Ward, Youngstown Tube, or prior approved equal.

   c. Grooved Products: Gruvlok, Tyco, Victaulic, or prior approved equal.

   d. Factory Segmentally Welded Grooved Products: Iowa Fittings, TexLine, Victaulic, or prior approved equal.

e. Flanged Products: American Cast Iron Pipe Company, Anvil International, Merit Manufacturing (Mueller), Trinity Valley Iron & Steel Company, Pacific Coast Flange Incorporated, Tyler Pipe, Union Foundry Company, U.S. Pipe and Foundry Company, Ward, or prior approved equal.

f. Welded outlets: Anvil International, Island Fitting, Merit Manufacturing (Mueller), NAP (North Alabama Pipe Corporation), Ward, or prior approved equal.

g. Ductile Iron Pipe: American Cast Iron Pipe Company, Pacific States Cast Iron Pipe Company, U.S. Pipe and Foundry Company, or prior approved equal.

h. Mechanical Joint Products: American Cast Iron Pipe Company, EBBA Iron Incorporated, Pacific States Cast Iron Pipe Company, U.S. Pipe and Foundry Company, or prior approved equal.

i. P.V.C. Pipe: Diamond Plastics Corporation, Johns Manville (Blue Brute), North American Pipe Corporation, PW Pipe, or prior approved equal.

j. Stainless Steel Fittings: Anvil International, Greensboro Pipe Company, Merit Brass, Victaulic, or prior approved equal.

k. Stainless Steel Pipe: Alaska Copper and Brass, American Pipe and Supply, Greensboro Pipe Company, Merit Brass, or prior approved equal.

2.03 FIRE SPRINKLERS

A. Provide minimum nominal ½-inch orifice commercial sprinklers with a release mechanism meeting the requirements of NFPA #13 for thermal sensitivity and temperature rating. Commercial sprinklers less than ½-inch orifice will not be allowed unless prior approval is obtained.

B. Provide high temperature (286 °F) dry pendent sprinklers in all commercial style freezers.

C. Extended coverage sprinklers will be allowed, but it will be the Fire Protection Sprinkler System Contractor's responsibility to assure proper implementation.

D. Extended coverage sprinklers will not be allowed in areas requiring sprinkler head guards unless a U.L. listed or Factory Mutual Global approved sprinkler head guard is available.

E. Provide white finished semi-recessed sprinklers with escutcheons of matching finish in acoustical ceiling tile ceilings.

F. Provide white finished semi-recessed sprinklers with escutcheons of matching finish in soffits or other gypsum wallboard ceilings that do not contain surface mounted light fixtures.

G. Provide white finished pendent sprinklers with 2-piece escutcheons of matching finish in rooms that contain entire gypsum wallboard ceilings containing surface mounted light fixtures.

H. Provide white finished semi-recessed horizontal sidewall sprinklers with escutcheons of matching finish in walls of normally occupied rooms or in rooms that are finished and painted.

I. Provide chrome finished semi-recessed dry style sprinklers (pendent or sidewall) with escutcheons of matching finish for all installation locations.

J. In lieu of rigid connections to dry sprinklers, flexible dry sprinklers may be used consisting of the following qualities:

1. Provide chrome finished semi-recessed dry style sprinklers (pendent or sidewall) with escutcheons of matching finish for all installation locations.

2. The sprinkler shall provide a vertical or horizontal flexible connection with a bend radius to 2”, and allow for up to 4 bends.

3. The product shall consist of a braided type 300 stainless steel corrugated flexible hose with a swivel type branch line threaded connection, EPDM gasket seal, with PTFE-coated Beryllium Nickel and stainless-steel spring-seal assembly.

4. The flexible dry sprinkler and bracket system shall be U.L. listed or Factory Mutual Global approved for sprinkler services to 175 p.s.i.

K. Provide bronze uprights in exposed areas (no ceilings) and in ceiling voids.

L. The Fire Protection Sprinkler System Contractor shall provide intermediate temperature sprinklers for all locations required by NFPA #13 to be of ordinary temperature rating thereby reducing the necessity for multiple temperature ratings of sprinklers to be installed.

M. Provide sprinkler head guards on exposed piping installed at an elevation less than 8'-0", or in areas subject to mechanical damage.

N. All sprinkler head guards shall be specifically listed for the sprinkler in which they are protecting.

O. Approved manufacturers are as follows:

1. Sprinklers: Reliable, Tyco, Victaulic, Viking, or prior approved equal.

2. Sprinkler Guards: Reliable, Tyco, Victaulic, Viking, or prior approved equal.

2.04 SPARE SPRINKLER CABINET

A. Provide a metal cabinet for the storage of spare sprinklers and sprinkler wrenches (adjacent to the sprinkler riser) for each building receiving a fire protection sprinkler system.

B. The number and types of extra sprinklers shall be as specified in NFPA #13 with one sprinkler wrench being provided for each type of sprinkler installed.

C. Spare sprinkler wrenches from the sprinkler manufacturer shall be provided by the Fire Protection Sprinkler System Contractor.

D. Spare sprinkler wrenches or other means of removing sprinklers (crescent wrenches for example) that are not approved by the sprinkler manufacturer shall not be provided.

2.05 BACKFLOW PREVENTER

A. Provide a letter of certification to the Owner after testing.

B. The backflow preventer type shall conform to local water purveyor requirements.

C. The backflow preventer shall be a double detector check valve assembly style made from cast iron or fabricated stainless-steel body consisting of (2) independent check valves, (2) OS&Y or butterfly shut-off valves, (4) ball type test cocks, a bypass valve, and meter trim.

D. The backflow preventer shall conform to U.L., Factory Mutual Global, FCCC, and HR flow rate with maximum velocity across the backflow preventer of 16 feet per second.

E. The backflow preventer type and installation configuration shall be listed in the "Backflow Prevention Assemblies Approved for Installation in Washington State" from the Washington State Department of Health.

F. Provide backflow preventer assembly with a permanently installed water pressure gauge with a ball valve on the supply side and discharge side of the assembly.

G. Approved manufacturers are as follows:

1. Backflow Preventers: Ames, Conbraco, Watts, Wilkins, or prior approved equal.

2.06 FIRE DEPARTMENT CONNECTIONS

A. Provide a fire department connection approximately 2'-0" to 4'-0" above the finished grade in a location (on the wall) allowed by the authority having jurisdiction.

B. The fire department connection is to be an approved two-way type with 2½" female National Standard hose thread inlets and a 4" female National Pipe Thread or grooved pipe connection.

C. Provide the fire department connection with a clapper, cap, and chain for each inlet and a single identification escutcheon plate.

D. At the low point near each fire department connection, install a 90-degree drain elbow with a ½" outlet for installation of a ball drip for system drainage to prevent freezing.

E. Approved manufacturers are as follows:

1. Fire Department Connections: Croker, Elkhart, Guardian, Potter Roemer, Powhattan, or prior approved equal.

2.07 HOSE VALVES FOR FULL FORWARD FLOW TESTING OF THE BACKFLOW PREVENTER

A. Provide full forward flow testing hose valves approximately 2'-0" to 4'-0" above the finished grade in a location on the exterior wall.

B. Provide downstream of the backflow prevention assembly either 2½" angled hose valves or 2½" straight pattern hose valves for full forward flow testing of the backflow preventer.

C. Provide (1) 2½" hose valve for each 250 g.p.m. of system demand.

D. Provide a brass valve body with brass internal parts, natural rubber seal, ductile iron hand wheel, 2½" National Pipe Thread by male hose thread outlet.

E. Provide each hose valve with a cap and chain.

F. Valve shall be rated for a working pressure of at least 300 p.s.i.

G. Approved manufacturers are as follows:

1. Hose Valves: Croker, Elkhart, Guardian, Nibco, Potter Roemer, Powhattan, or prior approved equal.

2.08 VALVES

A. Provide valves of types approved for fire service in accordance with NFPA #13.

B. Control valves for fire protection systems shall be either NRS, OS&Y or butterfly style.

C. All butterfly style valves shall be provided with an integral tamper switch and weatherproof actuator.

D. All butterfly style valves shall either have:

1. A "resilient seated" or "rubber seated" concentric design. The stem and disc are centered in the seat of the valve, all of which are centered in the body of the valve.

2. A pressure responsive seat with stem that is offset from the disc centerline to provide complete 360-degree circumferential seating.

E. Provide a valve with an integral tamper switch to piping for sprinklers serving elevator pits and elevator mechanical rooms. The valve shall be installed at an elevation approximately 5'-0" above finished floor.

F. Check valves shall be grooved or flanged clear opening spring assisted swing-check type for vertical or horizontal installation of sizes 2½" and larger (butterfly style check valves are not allowed).

G. Gate valves shall open by counterclockwise rotation.

H. Provide a normally closed butterfly valve on the piping utilized for full forward flow testing of the backflow preventer. A valve that is normally open in which the wiring of the integral tamper switch is reversed for a normally closed position will not be allowed. The integral tamper switch shall be listed for monitoring of the valve in a closed position such that the slightest opening of the valve will send a signal to the fire alarm system.

I. Approved manufacturers are as follows:

1. Butterball Valves: Milwaukee, Nibco, Victaulic, or prior approved equal.

2. Butterfly Valves: Anvil International (Gruvlok), McWane (Kennedy), Nibco, Tyco, Victaulic, or prior approved equal.

3. Ball Valves: Anvil International, Milwaukee, Nibco, United Brass, Victaulic, Watts, or prior approved equal.

4. Check Valves: Anvil International (Gruvlok), Reliable, United Brass, Victaulic, Viking, or prior approved equal.

5. N.R.S. Gate Valves: McWane (Kennedy), Mueller, Nibco, Victaulic, Wilkins, or prior approved equal.

6. OS&Y Gate Valves: AVK, McWane (Kennedy), Mueller, Nibco, Victaulic, Wilkins, or prior approved equal.

2.09 SHOTGUN RISER ASSEMBLIES

A. Provide a Shotgun Riser Assembly consisting of a main drain valve, flow switch, pressure gauge, and all accessories for a code compliant fire protection riser.

B. A shop fabricated piece of pipe containing welded outlets (for the required components) will be acceptable.

C. Approved manufacturers are as follows:

1. Shotgun Riser Assemblies: Reliable, Tyco, Victaulic, Viking, or prior approved equal.

2.10 FLOW SWITCH (RISER)

A. The flow switch shall be vane type with a pipe saddle and cast aluminum housing.

B. The electro-mechanical device shall include a flexible, low-density polyethylene paddle conforming to the inside diameter of the fire protection pipe.

C. The flow switch shall sense water movements and be capable of detecting a sustained flow of 10 g.p.m. or greater.

D. The flow switch shall contain a retard device adjustable from 0 to 90 seconds to reduce the possibility of false alarms caused by transient flow surges and shall be set to actuate the local alarm device in 60 seconds or less.

E. The flow switch shall contain (2) sets of single pole / double throw (SPDT) Form "C" contacts for the automatic transmittal of an alarm over the facility fire alarm system.

F. The flow switch shall be tamper resistant and shall be equipped with a silicone rubber gasket to assure a positive water seal and a dustproof cover to seal the flow switch mechanism from dirt and moisture.

G. Do not install the flow switch within 6" of a fitting that changes direction of the water flow or within 24" of a valve or drain.

H. The flow switch is to be installed by the Fire Protection Sprinkler System Contractor and wiring of the flow switch is be performed by the electrical Contractor.

I. Approved manufacturers are as follows:

1. Flow Switches: Potter Electric, System Sensor, or prior approved equal.

2.11 TAMPER SWITCHES

A. Provide tamper switches that are suitable for mounting to the type of control valve to be supervised either in the open or closed position.

B. The tamper switch shall contain (1) set of single pole / double throw (SPDT) Form "C" contacts arranged to transfer upon opening or closing of the valve of more than two rotations of the valve stem.

C. Tamper switches shall be tamper resistant and shall be provided for all control valves, backflow preventer valves, post indicating valves, or any other valve used for system shutdown.

D. Approved manufacturers are as follows:

1. Tamper Switches: Potter Electric, System Sensor, or prior approved equal.

2.12 INSPECTOR'S TEST CONNECTION

A. Provide test connections approximately 6 feet above the floor for each sprinkler system or portion of each sprinkler system equipped with an alarm device.

B. The Inspector’s test connection shall be located at the most remote part of each system.

C. If permitted by the authority having jurisdiction the inspector’s test valve may be located at the system riser and tied into the main drain discharge.

D. All inspectors’ test connection drain discharges shall be piped down the wall to an elevation approximately 6" above exterior grade before penetrating the exterior wall.

E. Provide test connection discharge piping to a location where the discharge will be readily visible and where water may be discharged without property damage.

F. All pipe and fittings outside of the building’s thermal envelope shall be hot dipped galvanized and the drain discharge shall terminate with a down turned 45° elbow and a galvanized cast-iron wall plate.

G. Exterior discharge shall be placed to minimize impacts on landscaping features and coordinated with the General Contractor and building Owner.

H. Provide a sight glass when the inspectors test discharge cannot be readily visible.

I. Inspector’s test valves installed in finished areas shall be recessed in the wall and provided with a lockable access door.

J. The Inspector’s test discharge orifice shall be a smooth bore corrosion resistant orifice giving a flow equivalent to one sprinkler of a type having the smallest orifice installed on that system.

K. For inspector’s test valves installed at the remote end of the sprinkler system, the inspector’s test discharge shall not terminate on the roof or on the roof of a building overhang.

L. The inspector’s test discharge shall be piped down to discharge just above exterior grade level.

M. The piping shall be located inside a wall or vertical shaft in finished areas.

N. Any inspector's test connection that discharges in landscaped areas or locations in which damage to owner property will occur shall be provided with a concrete splash block.

2.13 COMBINED INSPECTOR'S TEST AND DRAIN ASSEMBLY

A. The inspector’s test connection and the main drain (or auxiliary drain) valve may be combined into a listed unit that performs both functions.

B. The assembly shall be capable of providing a discharge flow equivalent to one sprinkler of a type having the smallest orifice installed on that system or full flow equivalent to the pipe size serving the assembly.

C. The assembly shall also contain a sight glass that allows for visual verification of water flow.

D. The combined inspector’s test and drain discharge shall be piped down the wall to an elevation approximately 6" above exterior grade before penetrating the exterior wall.

E. All pipe and fittings outside of the building’s thermal envelope shall be hot dipped galvanized and the drain discharge shall terminate with a down turned 45° elbow and a galvanized cast-iron wall plate.

F. Exterior discharge shall be placed to minimize impacts on landscaping features and coordinated with the General Contractor and building Owner.

G. The combined inspector’s test and drain (main or auxiliary) discharge shall not terminate on the roof or on the roof of a building overhang.

H. The combined inspector’s test and drain discharge assembly shall be piped down to discharge just above exterior grade level.

I. The piping shall be located inside a wall or vertical shaft in finished areas.

J. Any combined inspector's test and drain assembly that discharges in landscaped areas or locations in which damage to owner property will occur shall be provided with a concrete splash block.

K. Approved manufacturers are as follows:

1. Combined Inspector's Test and Drain Assemblies: AGF Manufacturing, FPPI (Sure-Test), Victaulic (TestMaster II), or prior approved equal.

2.14 DRAINS

A. Provide main drain discharge piping to the provided hub drain to readily receive the full flow from the main drain through a 2" air gap.

B. Provide auxiliary drains for trapped sections of system piping in accordance with NFPA #13.

C. Auxiliary drain valves installed in finished areas shall be recessed in the wall and provided with a lockable access door.

D. Coordinate all drain locations with the General Contractor and building Owner.

E. All pipe and fittings outside of the building's thermal envelope shall be hot dipped galvanized and the drain discharge shall terminate with a down turned 45° elbow and a galvanized cast-iron wall plate.

F. Exterior discharge shall be placed to minimize impacts on landscaping features and coordinated with the General Contractor and building Owner.

G. Termination of main drains or auxiliary drains that allow the discharged water to flow across concrete, asphalt, roof, building overhang roof, gutter, or other finished material will not be allowed.

H. Any drain that discharges in landscaped areas or locations in which damage to owner property will occur shall be provided with a concrete splash block.

2.15 FLEXIBLE PIPING SERVING PENDENT SPRINKLERS

A. If the Fire Protection Sprinkler System Contractor chooses to, provide flexible piping assemblies for drops to pendent sprinklers that are U.L. listed or Factory Mutual Global approved for use in fire protection sprinkler systems to 175 p.s.i.

B. The flexible pipe assembly shall utilize braided type 304 stainless steel flexible hose with factory installed zinc plated steel adapters (1" Male Pipe Thread (MPT) or grooved for connection to the sprinkler system piping and ½" or ¾" Female Pipe Thread (FPT) for connection of the sprinkler) that are fully welded or use of compression fittings to form a single unit.

C. The flexible piping unit shall be held securely to acoustical ceiling assemblies by using one of the following:

1. Mounting brackets that attach to the ceiling runners and utilizes self-tapping screws though each side of the mounting bracket to the ceiling runner.

2. Tube steel cross member that is secured to the ceiling runner with clips having set screws.

D. The flexible piping assembly shall be held securely to gypsum wallboard ceilings by securing the mounting bracket with four self tapping screws (two on each end) into the metal or wood stud ceiling framing members.

E. Flexible piping serving pendent sprinklers shall be installed in accordance with the documented manufacturers literature in regards to bend radius and number of bends allowed based upon the length of the flexible piping assembly.

F. Approved manufacturers are as follows:

1. Flexible Piping Serving Pendent Sprinklers: Easyflex, FlexHead, Vic-Flex (Victaulic), or prior approved equal.

2.16 PIPE HANGERS

A. Hanger components that attach directly to sprinkler piping or the building structure shall be U.L. listed or Factory Mutual Global approved.

B. Hanger components shall be connected directly to major frame members (Rigid Frames, CMU, Girder Trusses, etc.) wherever possible with connections to secondary framing members (joists, purlins, etc.) being made only when necessary and shall be coordinated with the Structural Engineer.

C. Unless approved by the Structural Engineer of record, Hangers shall not attach directly to metal decking without exception, sunless the metal deck is provided with a concrete topping.

D. All C-clamp type hangers shall be fitted with retainer straps.

E. Hangers consisting of a hanger ring, all thread rods, and a hanger ring attached to a pipe at a higher elevation will not be allowed.

F. All pipe stands shall be listed for the application or constructed of a minimum 2" diameter schedule 40 steel pipe.

G. Post-installed concrete anchors shall have passed the ACI 355.2 cracked concrete test.

H. Approved manufacturers are as follows:

1. Hangers: Afcon (Anvil International), Erico (nVent), PHD, Tolco (Eaton), or prior approved equal.

2. Attachments: Hilti, ITW Ramset, Powers Fastening Innovations, Simpson Manufacturing Company, ITW (Sammy), DeWalt (HangerMate), or prior approved equal.

2.17 SEISMIC BRACING COMPONENTS

A. Seismic braces shall be connected directly to major frame members (Rigid Frames, CMU, Girder Trusses, etc.) wherever possible with connections to secondary framing members (joists, purlins, etc.) being made only when necessary and shall be coordinated with the Structural Engineer.

B. Seismic braces shall not attach directly to metal decking without exception unless the metal deck is provided with a concrete topping.

C. Post-installed concrete anchors shall have passed the ACI 355.2 cracked concrete test.

D. Approved manufacturers are as follows:

1. Seismic Braces: Afcon (Anvil International), Erico (nVent), Tolco (Eaton), or prior approved equal.

2. Attachments: Hilti, ITW Ramset, Powers Fastening Innovations, Simpson Manufacturing Company, ITW (Sammy), DeWalt (HangerMate), or prior approved equal.

2.18 PRESSURE RELIEF VALVES

A. Each system riser shall be provided with a pressure relief valve not sized less than ½" in size.

B. The pressure relief valve shall be cast bronze with a rough brass finish.

C. The pressure relief valve shall be set to operate at a minimum pressure of 175 p.s.i. or 10 p.s.i. in excess of the maximum system pressure, whichever is greater.

D. In lieu of a pressure relief valve, an auxiliary air reservoir listed for fire protection use that can absorb pressure increases can be provided.

E. Approved manufacturers are as follows:

1. Pressure Relief Valves: AGF Manufacturing, Bermad (Victaulic), Watts, or prior approved equal.

2.19 WATER PRESSURE GAUGES

A. Each system shall have permanently installed stainless steel pressure gauges to provide visual supervision of the water pressure.

B. Each water pressure gauge shall be provided with a ball valve for easy water pressure gauge replacement without shutting down the system.

C. Provide a minimum 3½" diameter pressure gauge with a ¼" national pipe thread connection.

D. The pressure gauge shall have an accuracy of 3-2-3% over the range of the gauge per ASME B40.100 (3% over the first ¼ of the gauge range, 2% over the middle ½ of the gauge range, and 3% over the last ¼ of the gauge range).

E. The pressure gauge shall be calibrated to register up to a maximum of 300 p.s.i. for static water pressures less than 175 p.s.i. and a minimum of 50 p.s.i. above static water pressure when the static water pressure exceeds 175 p.s.i.

F. Provide a water pressure gauge in the following locations at a minimum.

1. Supply side of the backflow preventer check valves to read the system supply pressure.

2. Discharge side of the backflow preventer check valves to read the pressure drop across the backflow assembly.

3. On the system riser above all check valves or alarm valves to read the system pressure.

G. Approved manufacturers are as follows:

1. Water Pressure Gauges: Argco, Ashcroft, Moeller Instrument Company Inc., Potter Roemer, Reliable, US Gauge Products, Victaulic, Wika, or prior approved equal.

2.20 AUTOMATIC AIR VENTS

A. Provide an automatic float type air vent to reduce the amount of trapped air within all wet pipe based automatic fire protection sprinkler systems.

B. Provide a ball valve in an accessible location between the system piping and the automatic air vent to facilitate maintenance of the automatic air vent.

C. An automatic air vent shall be installed at a high point of the system piping for each wet-pipe sprinkler system installed.

D. The Fire Protection Sprinkler System Contractor shall determine the exact location of the automatic air vents based upon the piping layout indicated on the Fire Protection Sprinkler System Contractor's shop drawings.

E. Where automatic air vents may discharge water, the automatic air vent discharge shall not terminate in the building (except models than cannot emit water).

F. The automatic air vent discharge shall be piped down to discharge just above exterior grade level.

G. If discharging to the exterior of the building is not practical, the Fire Protection Sprinkler System Contractor shall provide sketches that identify the proposed interior discharge location to the Architect/Engineer for approval prior to the Fire Protection Sprinkler System Contractor performing the work.

H. Approved manufacturers are as follows:

1. Automatic Air Vents: AGF, Engineered Corrosion Solutions, Potter, South-Tek, Metraflex, or prior approved equal.

2.21 ACCESS DOORS

A. Provide access doors for the following components:

1. Auxiliary drain valves installed in finished areas

2. Inspector’s test valve installed in finished areas

3. Control valves serving sprinklers in elevator pits

4. Control values serving sprinklers in elevator machine / mechanical rooms

B. Access doors shall be installed at an elevation approximately 5'-0" above finished floor.

C. Access doors in rated walls shall be fire rated with 2" of insulation sandwiched between an inner and outer door panels.

D. Access doors in non-rated walls are not required to be fire rated.

E. The access doors shall be cold rolled steel and constructed with a minimum 18-gauge frame and an 18-gauge door panel minimally.

F. Access doors shall be a minimum of 9" X 9" in size for auxiliary drain valves.

G. Access doors shall be a minimum of 12" X 12" in size for control valve loops.

H. Access doors shall mount flush to the finished wall and are not allowed to be surface mounted, unless the wall is CMU or concrete.

I. Access doors shall be UL listed or Factory Mutual Global approved and shall have a hinge, key operated lock, and a baked-on primer coating.

J. Approved manufacturers are as follows:

1. Access Doors: Acudor, Elmdor, Greenheck, JL Industries, Nystrom, or prior approved equal.

2.22 WALL PLATES

A. Provide a split hinge type metal plate or split plastic plate for piping passing through walls, floors, platforms, and ceilings installed in exposed spaces.

B. Wall plates shall either be chrome plated or paintable white finish.

C. Wall plates installed on the exterior of the building shall be galvanized cast-iron.

2.23 OVERSIZED ESCUTCHEON TRIM RINGS

A. The Fire Protection Sprinkler System Contractor shall provide oversized escutcheon trim rings to conceal the suspended acoustical tile ceiling system penetrations that are oversized to meet the requirements of the International Building Code (I.B.C.) and ASCE 7.

B. The oversized escutcheon trim rings shall be the same finish as the sprinkler and escutcheon in which it is to be installed.

C. The oversized escutcheon trim rings shall be made of cold rolled steel to maintain the fire ratings. Plastic or other materials will not be allowed.

D. The oversized escutcheon shall be recessed in the middle where the sprinkler escutcheon sits to create a flat profile. Oversized escutcheon rings that are not recessed in the middle will not be allowed.

E. Approved manufacturers are as follows:

1. Oversized Escutcheon Trim Rings: Fire Lock (Victaulic), or prior approved equal.

2.24 LIST OF SPRINKLERS

A. The Fire Protection Sprinkler System Contractor shall provide a typed list of all sprinklers installed in the project per the requirements of NFPA #13.

B. The typed list shall be placed within the spare sprinkler cabinet and shall identify each sprinkler by Sprinkler Identification Number, manufacturer, model, orifice, deflector type, thermal sensitivity, and pressure rating.

C. The typed list shall also provide a general description, the quantity of each type of sprinkler provided within the spare sprinkler cabinet, and the date the list was generated.

2.25 IDENTIFICATION SIGNS

A. Provide a permanently marked metal or engraved rigid plastic identification sign with proper lettering and secured with corrosion resistant wire, chain, or other approved methods for all control valves, drain valves, inspector's test valves, and fire department connection zones in accordance with NFPA #13.

2.26 HYDRAULIC SIGNS (PLACARDS)

A. Each sprinkler system riser shall have the NFPA #13 required hydraulic sign placed near the control valve that is permanently marked and made either of weatherproof metal, rigid plastic or weatherproof tyvek.

B. The hydraulic sign shall be permanently secured with corrosion resistant wire, chain, or adhesive backing.

C. The hydraulic sign shall identify the location of the design area, discharge density, design area size, system demands at the base of riser, hose stream allowances, current water flow information, auxiliary design parameters (densities and areas) associated with the system installed, and the name of the installing Fire Protection Sprinkler System Contractor.

2.27 GENERAL INFORMATION SIGNS (PLACARDS)

A. Each sprinkler system riser shall have the NFPA #13 required general information sign placed near the control valve that is permanently marked and made either of weatherproof metal, rigid plastic or weatherproof tyvek.

B. The general information sign shall be permanently secured with corrosion resistant wire, chain, or adhesive backing.

C. The general information sign shall identify the name and location of the facility protected, flow test data, location of all auxiliary drains and low point drains, original results of main drain flow test, name of installing Fire Protection Sprinkler System Contractor or designer, and the indication of presence or location of anti-freeze or other auxiliary systems.

PART 3 - EXECUTION

3.01 INSTALLATION

A. Installation, workmanship, fabrication, assembly, erection, examination, inspection, and testing shall be in accordance with NFPA #13, except as modified herein.

B. All piping and fittings installed prior to the backflow preventer are considered part of the potable water system and shall be required to be of a type that maintains a clean and rust free potable system. The use of black and galvanized pipe and fittings on the potable waterside of the backflow preventer will not be allowed.

C. Cutout disks that are created when cutting in a flow switch shall be secured with nylon zip ties or metal wiring to the flow switch that the cutout disk was cut.

D. Cutout disks that are created when cutting in mechanical tee type outlets shall be secured with nylon zip ties or metal wiring near the location from which the cutout disk was cut.

E. Grooved couplings and fittings shall be installed in accordance with the manufacturer's recommendations. Grooved ends shall be clean and free from indentations, projections, and roll marks in the area from the pipe end to the groove. Grooved coupling gaskets shall be molded and produced by the coupling manufacturer.

F. The Fire Protection Sprinkler System Contractor shall remove and replace any piping joints deemed improperly installed or show signs of leakage.

G. The Fire Protection Sprinkler System Contractor shall remove and replace any piping that has been damaged upon installation and shows signs of being bent, warped, or dented.

H. Do not install sprinklers that have been dropped, damaged, show signs of corrosion, show signs of foreign matter buildup, show signs of a cracked glass bulb, or show a visible loss of fluid.

I. The glass bulb protector shall remain in place until the sprinkler is completely installed. The Fire Protection Sprinkler System Contractor shall remove the glass bulb protector by hand after installation and prior to the sprinkler system being placed in service. The use of tools or devices to remove the glass bulb protector is not allowed.

J. Install piping straight and true to bear evenly on hangers and supports. Hangers for piping to attach to structural members with no hanger being attached to acoustical ceiling tiles or gypsum wallboard ceilings.

K. All sprinklers installed to protect the area under ductwork or similar obstructions shall be restrained from lateral movement.

L. Ends of new piping and existing piping affected by the Fire Protection Sprinkler System Contractor's operations shall be thoroughly cleaned of water, cutting oil, and foreign matter. Keep piping systems clean during installation and prevent entry of foreign matter. Inspect all piping before placing into position for foreign matter and remove as necessary.

M. All piping in finished areas shall be installed concealed above the ceiling space unless specifically noted otherwise.

N. In rooms with exposed structure, the fire protection sprinkler system piping shall be installed as tight to structure as possible and shall be installed to minimize piping offsets.

O. Any portion of the sprinkler system that is not indicated on the contract documents to be installed exposed shall be addressed in writing with sketches (prior to the piping being fabricated or installed) to the Architect and Engineer to evaluate.

P. Install piping at such heights and in such a manner so as not to obstruct any portion of windows, doorways, passageways, or lights. Coordinate installation of piping with all trades (mechanical, electrical, plumbing, and structural) to avoid conflicts and offset piping as required to clear any interferences that may occur.

Q. Install piping at such heights and in such a manner so as not pose hazards to normal walking head heights, impact the minimum clear height requirements or present tripping hazards.

3.02 CEILING SYSTEM PENETRATIONS

A. All pendent sprinklers installed in ceiling systems shall meet the requirements of the International Building Code (I.B.C.) and ASCE 7 by one of the following options:

1. Oversized suspended acoustical tile ceiling system penetrations shall be required on all hard-piped pendent sprinklers installed in suspended acoustical tile ceiling systems. The oversized suspended acoustical tile ceiling system penetration shall have a 1" annular space around the suspended acoustical tile ceiling penetration that will allow free movement of at least 1" in all directions.

2. Tight suspended acoustical tile ceiling system penetrations shall be allowed when a swing joint is installed at the top of the sprinkler drop that can accommodate 1" of ceiling movement in all directions.

3. Tight suspended acoustical tile ceiling system penetrations shall be allowed when Flexible Piping Serving Pendent Sprinklers is installed that can accommodate 1" of ceiling movement in all directions

4. Tight suspended acoustical tile ceiling system penetrations shall be allowed when the sprinkler system and suspended acoustical tile ceiling system are tied together as an integral unit and evaluated by a registered design professional hired by the Fire Protection Sprinkler System Contractor.

3.03 RESTRAINT OF SPRINKLER SYSTEM BRANCH LINES

A. Sprinkler system branch lines shall be laterally restrained at intervals not exceeding those specified in Table 9.3.6.4(a) of NFPA #13 and are based upon the branch line diameter and the seismic coefficient value of C_p (See Structural Drawings).

B. Branch Line Restraint shall not attach directly to metal decking without exception unless the metal deck is provided with a concrete topping.

C. Means of providing branch line restraint shall comply with one of the means contained within Section 9.3.6.1 of NFPA #13.

3.04 SPRINKLER PROTECTION OF EXTERIOR OVERHANGS AND CANOPIES

A. Provide sprinkler protection beneath all attached exterior overhangs and canopies that exceed 4'-0" in depth in which any member that comprises the exterior overhang and canopy is of combustible construction (entire canopy construction, not just exposed surface).

B. Provide sprinkler protection beneath all exterior overhangs and canopies that exceed 2'-0" in depth, where the area underneath the exterior overhang and canopy is used for the storage or handling of combustibles regardless of the construction type.

C. Provide sprinkler protection inside all exterior overhangs and canopies comprised of combustible construction and the clear space between framing members exceeds 6" in height.

D. Provide sprinkler protection inside and beneath all exterior overhangs and canopies required by the local Authority Having Jurisdiction and as indicated on the contract documents.

3.05 PURITY TESTING OF PIPING INSTALLED BEFORE BACKFLOW PREVENTION DEVICE

A. Disinfect the new potable water piping affected by the Fire Protection Sprinkler System Contractor's operations in accordance with the health authority, water purveyor having jurisdiction, AWWA C651, and AWWA C652.

B. Exercise caution when mixing chlorine disinfectant solutions.

C. Fill piping systems or piping affected by the Fire Protection Sprinkler System Contractor’s operations with solution containing a minimum of 50 parts per million of chlorine and allow solution to stand for minimum of 24 hours or use a solution containing a minimum of 200 parts per million of chlorine and allow solution to stand for minimum of 3 hours.

D. Following the required standing time, the piping shall be flushed with clean potable water until the maximum residual chlorine content is not greater than that of the domestic water supply or 0.2 part per million.

E. Have a certified laboratory analyze the results from two consecutive satisfactory bacteriological samples and submit these results prior to the piping being placed into service.

F. Purity testing of piping supplied by non-potable water sources will not be required.

3.06 PREPARATION OF SPRINKLER PIPING FOR PAINTING IN EXPOSED AREAS

A. The Fire Protection Sprinkler System Contractor shall clean the exterior surface to the sprinkler piping that is to be painted. The piping shall be cleaned and prepped in the following manner.

1. The Fire Protection Sprinkler System Contractor shall remove all pipe tags or fabrication labels that have been adhered to the sprinkler system piping as part of the listing/fabrication process.

2. Any adhesive that remains on the sprinkler piping after removal of the pipe tags or fabrication labels shall be removed with an acceptable adhesive solvent.

3. All sprinkler piping and fittings that show signs of surface rust shall be sanded to remove the rust from the sprinkler piping.

4. Sprinkler system piping shall be wiped down with a solvent soaked rag to remove cutting oil residue, finger prints, adhesive solvents, and other foreign materials that could prevent the primer and/or finished color coats of paint from adhering properly to the sprinkler system piping.

3.07 PROTECTION OF SPRINKLERS DURING PAINTING OR SPRAY APPLICATIONS

A. The Fire Protection Sprinkler System Contractor shall provide and install a suitable means of protecting the sprinklers against the accumulation of foreign matter build up during the time that the exposed structure is either being painted, having fire proofing applied, or during other applications that put particulates into the air that potentially could collect upon the sprinklers.

B. At the conclusion of the processes listed above, the Fire Protection Sprinkler System Contractor shall be responsible for removing the protective coverings, visually inspecting the sprinklers for foreign matter build-up, and shall replace all sprinklers where build-up of foreign matter is observed at no additional cost to the owner.

3.08 HYDROSTATIC TEST

A. Hydrostatically test each system at 200 P.S.I. or 50 P.S.I. in excess of the systems working pressure (whichever is greater), for a 2-hour period with no leakage or reduction in pressure.

B. Piping above ceilings shall be tested, inspected, and approved before installation of ceiling material.

C. When tests have been completed and corrections made, submit a signed and dated certificate similar to that specified in NFPA #13.

3.09 WATER FLOW TEST

A. Test the alarms and other devices by flowing water through the inspector's test connection.

B. Upon activation of the inspector’s test valve, the time to sound the local alarm device shall not be greater than 60 seconds.

C. When tests have been completed and corrections made, submit a signed and dated certificate similar to that specified in NFPA #13.

3.10 FORMAL TESTS AND INSPECTIONS

A. Do not submit a request for formal test and inspection until the preliminary test and corrections are completed and approved.

B. An experienced technician regularly employed by the system installer shall be present during the inspection.

C. At this inspection, repeat any or all of the required tests as directed.

D. Correct defects in work provided by the Fire Protection Sprinkler System Contractor and make additional tests until the system(s) comply with contract requirements.

E. Furnish appliances, equipment, electricity, instruments, connecting devices and personnel for the tests.

F. The Owner will furnish water for the tests.

G. Furnish Architect with three (3) copies of certificates required by testing agencies.

3.11 TRAINING PERIOD

A. Upon completion of the work and after all tests and inspections by the authority(s) having jurisdiction, the Fire Protection Sprinkler System Contractor shall demonstrate and train the Owner's designated operation and maintenance personnel in the operation and maintenance of the fire protection system.

B. The Fire Protection Sprinkler System Contractor shall arrange scheduled instruction periods with the Owner’s designated operation and maintenance personnel.

C. The Fire Protection Sprinkler System Contractor's representatives shall be superintendents or foremen who are knowledgeable in each system and supplier’s representatives when so specified.

D. Scheduled training periods shall be based upon complexity of the system installed, but in no case, be less than indicated in Paragraph 3.04 of Specification Section 21 0000.

E. Upon request of the Owner, a DVD of the training period shall be made available by the Fire Protection Sprinkler System Contractor at no additional cost to the Owner.

END OF SECTION

SECTION 21 1316

DRY PIPE AUTOMATIC SPRINKLER SYSTEMS

PART 1 - GENERAL

1.01 GENERAL

A. Includes, but not limited to, the following:

1. Provide all material, labor, equipment, design, and services necessary to perform the installation of dry pipe automatic fire protection sprinkler system(s) for complete fire protection coverage throughout, in accordance with the required and advisory provisions of the latest edition of NFPA #13 accepted by the Authority having Jurisdiction (City of Everett), and project specifications, except as modified herein.

2. The Fire Protection Sprinkler System Contractor shall obtain a permit and final approval from City of Everett for the fire protection sprinkler system. All permits, fees for plan review, inspections, testing, etc. shall be included in the bid proposal.

3. **The Fire Protection Sprinkler System Contractor shall simultaneously submit shop drawings, hydraulic calculations, seismic bracing calculations, and manufacturer's data sheets to the local Authority Having Jurisdiction and Architect/Engineer for review and shall be approved by the Architect/Engineer prior to the purchase, fabrication, or installation of any system component as detailed in Paragraph 1.14 of Section 21 1316.**

4. All fire protection equipment installed shall be by a manufacturer contained within "PART 2 – PRODUCTS" of this specification unless prior approval has been received for "Requests For Substitution" following the guidelines set forth in Specification Section 21 0000 Paragraphs 1.09 and 2.01.

1.02 RELATED DOCUMENTS

A. Drawings, General Conditions and Supplementary Conditions of the Contract, including Division 0 and Division 1 Specification Sections apply to work of this Division.

1.03 RELATED SECTIONS

A. The following sections apply to this section:

1. Section 21 0000 "GENERAL FIRE PROTECTION REQUIREMENTS"

2. Section 21 1123 "PRIVATE FIRE SERVICE MAINS"

3. Section 21 1313 "WET PIPE AUTOMATIC SPRINKLER SYSTEMS"

1.04 GENERAL SYSTEM REQUIREMENTS

A. Notify the Architect, Fire Protection Engineer, General Contractor, and building Owner to coordinate the pre-design meeting stated in Section 21 0000 Paragraph 1.01.E.

B. When the trip time / water delivery time testing required by paragraph 3.11 of this specification section can't be met, the Fire Protection Sprinkler System Contractor shall provide an additional dry pipe automatic fire protection sprinkler system at no additional cost to the owner.

C. _____.

D. The sprinkler riser detail shown on the contract documents is conceptual in nature with the minimum quantity and types of sprinkler risers being required for this project. Actual quantity and types of system risers required for this project shall be determined by the Fire Protection Sprinkler System Contractor. If additional system risers are necessary, the Fire Protection Sprinkler System Contractor shall include them in their scope of work, prior to bidding.

E. A table shall be placed adjacent to the fire protection sprinkler system riser detail that indicates the actual "Floor Area" protected by each system riser on each floor of the building it serves.

F. Devices and equipment for fire protection service shall be UL listed or Factory Mutual Global approved for use in dry pipe sprinkler systems.

G. **All HVAC mechanical units and associated ductwork larger than 10" shall be shown on the drawings as part of the backgrounds.**

H. All HVAC grilles, electrical lights, and fire alarm devices that are to be installed at the ceiling level shall be shown on the submittal drawings to verify sprinkler placements.

1.05 LOCATION OF SPRINKLERS

A. Sprinklers located in soffits shall be installed in a consistent pattern and placed to avoid all lights (surface mounted and/or recessed), air diffuser grilles, and obstructions.

B. Sprinklers in exposed areas shall be installed in a consistent pattern while avoiding all lights, ductwork, and structural members.

C. All upright sprinklers shall be installed with the frame arms parallel to the branch line.

D. The "Area of Coverage" per sprinkler installed beneath roll back garage style doors shall be based upon the occupancy classification of the floor area beneath the roll back garage style door, not Light Hazard Occupancy as indicated by NFPA #13.

E. Spacing of sprinklers shall not exceed that permitted by NFPA #13 for occupancy, except where the Fire Protection Sprinkler System Contractor elects to utilize extended coverage sprinklers.

1.06 WATER DISTRIBUTION

A. Sprinkler discharge shall be uniform throughout the area in which the sprinklers will open. Discharge from individual sprinklers in the hydraulically most remote area shall be at a minimum of 100% the specified density.

1.07 SPRINKLER DENSITY AND DISCHARGE AREA OF OPERATION

A. Size piping to provide the required density when the system is discharging over the entire most demanding area.

B. Using the "Pipe Schedule" method to determine pipe sizing will not be allowed.

C. Basing hydraulic calculations upon the "Room Design" method to determine pipe sizing will not be allowed.

D. Application rates to horizontal surfaces below the sprinklers (floor area) shall be 0.10 g.p.m. per square feet over the hydraulically most demanding 1,950 square feet for light hazard occupancy (dry sprinkler coverage under exterior canopies or overhangs).

E. Application rates to horizontal surfaces below the sprinklers (floor area) shall be 0.15 g.p.m. per square feet over the hydraulically most demanding 1,950 square feet for ordinary hazard group I occupancy.

F. Application rates to horizontal surfaces below the sprinklers (floor area) shall be 0.20 g.p.m. per square feet over the hydraulically most demanding 1,950 square feet for ordinary hazard group II occupancy.

1.08 HOSE STREAM ALLOWANCES

A. Hose stream allowances for hydraulic calculations shall be per NFPA #13.

B. Light hazard occupancy shall require 100 g.p.m. combined hose streams.

C. Ordinary hazard occupancy shall require 250 g.p.m. combined hose streams.

1.09 PIPE C-VALUES FOR CALCULATING FRICTION LOSSES

A. Calculate losses in piping in accordance with Hazen-Williams equation using a 'C' value of:

1. 100 for unlined cast iron, unlined ductile iron, or black steel dry systems.

2. 120 for black steel wet systems.

3. 140 for cement lined cast iron, cement lined ductile iron, asbestos cement, or concrete.

4. 150 for listed P.V.C., copper tube, or stainless steel.

1.10 WATER SUPPLY

A. Base hydraulic calculations (for the bid) on a fire flow report form for the parcel adjacent to this project (1410 Seiner Dr.) dated November 15, 2022 indicating 99 p.s.i. static pressure with a residual pressure of 81 p.s.i. while flowing 2,687 g.p.m. Test hydrant elevation is 9.01 feet Flow test information provided by City of Everett.

B. After award of the project, the Fire Protection Sprinkler System Contractor shall verify available water supply with a flow test or flow test model recorded within six months of bid date. If a new flow test is required, the Fire Protection Sprinkler System Contractor shall coordinate with local authorities for a new flow test and the fees associated with a new flow test shall be included in the bid. Information obtained from this flow test and indicated on the drawings shall be: test hydrant static pressure, test hydrant residual pressure, associated pitot reading from flowing hydrant, test hydrant location, test hydrant elevation, and underground water main configuration.

1.11 PIPE HANGER DETAILS

A. Provide pipe hanger details and seismic bracing details in strict accordance with NFPA #13 and manufacturer's literature.

B. Details shall be unique to each installation configuration with all components clearly identified including the means of attachment and structure to be attaching to.

C. For all trapeze hangers, provide a table indicating the size of the pipe to be supported, size and type of the trapeze member, section modulus of the trapeze member, distance from the structure to pipe being supported (A and B dimensions), and the section modulus required.

1.12 SEISMIC BRACING

A. Calculations.

1. Seismic brace calculation requirements shall be based upon Section 1613.1 of the 2018 Edition of the International Building Code (I.B.C.) and Chapter 13 of ASCE 7-10.

2. The "General Notes" sheets for the structural drawings contained in the contract documents define the "Seismic Design Category" for this project.

3. Per Section 13.6.8.2 of ASCE 7-10, fire protection sprinkler piping, pipe hangers, and bracing designed and constructed in accordance with NFPA #13 shall be deemed to meet the force and displacement requirements of this section.

4. Provide seismic calculations for each seismic brace configuration showing the total calculated load, size of bracing material, type of bracing material, length of bracing material, seismic brace design angle, allowable load of the bracing component, allowable horizontal bracing load of the sprinkler system, structure for bracing connection, size of fastener, length of fastener, allowable load per fastener, and the number of braces required.

5. Each seismic brace configuration shall have a unique identifier associated with the calculation to easily and readily identify which seismic brace calculation it is.

6. Seismic bracing members for connections to structural members shall be sized per assigned load tables in NFPA #13 with a maximum L/R ratio of 200.

7. **The "Total Calculated Load" divided by the "Allowable Load per Fastener" shall not exceed a maximum value of 0.90.**

B. Drawings.

1. The submittal drawings shall identify the "Zone of Influence" for each seismic brace configuration that is provided with a seismic brace calculation.

2. The submittal drawings shall identify each seismic brace on the submittal drawings by the same unique identifier indicated in the seismic brace calculations to easily and readily cross reference the seismic brace calculation associated with that particular seismic brace.

C. Details.

1. Seismic bracing details may be incorporated into the seismic bracing calculations to form a single detail for each brace configuration.

2. The seismic brace details shall identify the seismic brace member, length of brace member, angle of brace member installation, the structural member the seismic brace is attaching to, the fastener to be utilized, and all seismic brace components by Manufacturer and model number.

1.13 SYSTEM AIR CAPACITY

A. The size of the air compressor shall be based upon the total volume of the dry system piping.

B. The Fire Protection Sprinkler System Contractor shall create a table (located adjacent to the riser detail) indicating pipe size, pipe type, pipe diameter, and the associated total lineal length for each pipe size.

C. The volume of air contained in the sprinkler system shall be the sum of all the individual pipe sizes and shown at the bottom of the table.

1.14 SUBMITTALS

A. See Specification Section 21 0000 Paragraphs 1.09 and 2.01 for "Submittal" requirements.

B. Sprinklers shall be referred to in the equipment submittals by the sprinkler identification or model number as specifically published in the appropriate agency listing or approval. Trade names or other abbreviated designations shall not be allowed.

C. Follow the guidelines set forth in Specification Section 21 0000 Paragraphs 1.09 and 2.01 for "Requests For Substitution" procedures. Product substitution during installation from the approved Equipment Submittals will not be allowed and shall result in the removal and re-installation of system components at no additional cost to the Owner.

D. Equipment submittal tabs shall include, at a minimum, the following:

1. Piping

2. Fittings / Couplings

3. Sprinklers and Accessories

4. Backflow Preventers

5. Fire Department Connections

6. Valves

7. Dry Pipe Valves and Accessories

8. Electrical / Fire Alarm Components

9. Air Compressors and Accessories

10. Pipe Hangers

11. Seismic Bracing Components

12. Access Doors

13. Miscellaneous Equipment

E. Equipment submittals shall include all materials, components, and devices being installed. The items contained in the following list are typically included in a Dry Pipe Automatic Sprinkler System installation and would require equipment submittal literature to be provided.

1. Piping (Potable and Non-Potable)

2. Fittings / Couplings (Flanged, Grooved, Threaded, Etc.)

3. Sprinklers / Head Guards

4. Backflow Preventers

5. Fire Department Connections

6. Hose Valves for Full Forward Flow testing of the Backflow Preventer

7. Valves

8. Dry Pipe Valves

9. Quick Opening Devices (Accelerators)

10. Pressure Switches

11. Tamper Switches

12. Air Compressors

13. Air Maintenance Devices

14. Inspector’s Test Assemblies

15. Flexible Piping Serving Pendent Sprinklers

16. Pipe Hangers

17. Seismic Bracing Components

18. Water Pressure Gauges

19. Air Pressure Gauges

20. Access Doors

F. Follow the guidelines set forth in Section 21 0000 Paragraph 1.09 for submittal requirements of the following:

1. Equipment Submittals.

2. Shop Drawings

3. Hydraulic Calculations

4. Seismic Brace Calculations

5. Contractor Qualifications

G. Submit all test results identified in "Part 3 – Execution" of Section 21 1316 for review and/or approval.

H. All re-submitted drawings shall have the areas of revision clearly marked with revision clouds.

1.15 QUALIFICATIONS

A. Design and installation of Fire Protection Sprinkler Systems shall be in accordance with Section 212.80.018 of the "Washington Administrative Code" (WAC).

B. The installing Fire Protection Sprinkler System Contractor shall have a minimum of five (5) years' experience in the design, installation, and testing of dry pipe automatic fire protection sprinkler systems, or similar fire protection systems. A list of installations of a similar nature and scope shall be provided on request.

1.16 PIPING SYSTEM LAYOUT

A. Prepare detailed working drawings that are not larger than the contract documents for the system layout in accordance with NFPA #13, "Working Drawings (Plans)." Show data essential for the proper installation of each fire protection sprinkler system per NFPA #13 consisting of floor plans (1/8" = 1'-0" minimum), building sections, piping details, and elevations to clearly show pipe routing, sprinkler spacings, system water supply, devices, valves, and fittings.

B. The cover sheet of the shop drawings shall contain a site plan (1" = 50'-0" minimum) that clearly shows all fire service main routing with size, type, and length of pipe indicated, fire hydrant locations, fire department connection location, devices, valves, and fittings, regardless of who performed the underground work.

C. A graphical scale shall be provided for each floor plan or detail on the shop drawings in accordance with NFPA #13, "Working Drawings (Plans)".

D. The minimum text size on full scale drawings shall be 1/8" high.

E. The cover sheet of the shop drawings shall clearly state the scope of Contractor's work, Contractor's exclusions, Contractor's start point, sprinkler system design criteria, which edition of NFPA #13 was used for the sprinkler design, sprinkler system design density, remote area size for all occupancies, and current water flow information used in the hydraulic calculations.

F. Projects that require more than one sheet to show the entire fire protection sprinkler system shall require a key plan.

G. The key plan shall be located in the lower right-hand corner of the drawing, shall identify the location of the fire protection sprinkler system that is contained on that sheet, and shall contain a reference north arrow.

H. All sheets shall contain a "Matchline" designation to indicate where the building and fire protection sprinkler system continues, even if on the same sheet.

I. All flexible grooved couplings that are to be installed shall be designated on the drawings and shall meet the requirements of NFPA #13 for vertical and horizontal pipe runs.

J. Sprinklers shall be referred to in the sprinkler legend by the sprinkler identification or model number as specifically published in the appropriate agency listing or approval. Trade names or other abbreviated designations shall not be allowed.

1.17 SPRINKLER SYSTEM DESIGN

A. Hydraulic calculations for the fire protection sprinkler system design are to be based upon the area/density method.

B. Hydraulic calculations shall be performed on a computer utilizing an approved fire protection hydraulics program.

C. Hydraulic calculations performed by hand will not be accepted.

D. 1" piping shall not serve (2) upright or (2) pendent sprinklers unless hydraulic calculations are provided to verify the pressure losses associated with multiple flows through 1" pipe.

E. An equivalent length of 1'-0" shall be added to the hydraulic calculations for each roll groove installed on the piping and shall be added to the pipe containing the roll groove.

F. All changes in piping elevation shall be reflected in the hydraulic calculations at the point in which the elevation change occurs. Adding an accumulated total for elevation at a single point will not be allowed.

G. Hydraulic node numbers shall be unique for each remote area, shall not be duplicated for auxiliary remote areas, shall not be duplicated for other sprinkler systems installed as part of this project, and shall be shown on the submittal drawings.

H. Hydraulic node numbers shall be unique for each reference point and only used once per system. A common reference point for multiple hydraulic calculations shall only have one hydraulic node designation, multiple references to the same hydraulic reference point will not be accepted.

I. An equivalent "K-factor" for sprinkler drops or sprigs (stub-ups) will not be acceptable. The actual "K-factor" of the sprinkler, associated lineal pipe footage, equivalent lineal footage for associated pipe fittings, and elevations shall be part of the main body of the hydraulic calculations. Separate one-line calculations to determine an equivalent "K-factor" that is inserted into the hydraulic calculations will not be acceptable.

PART 2 - PRODUCTS

2.01 ABOVEGROUND PIPING SYSTEMS

A. Provide fittings for changes in direction of piping and for connections. Make changes in piping sizes through tapered reducing pipe fittings and perform all welding in the shop. Bushings and field welding will not be permitted.

B. Conceal all piping in areas with suspended and hard ceilings.

C. All fire protection system components, devices, and materials installed as part of this project shall be new.

D. **All fire protection system components and devices shall be domestically manufactured. Imported components will not be allowed.**

2.02 SPRINKLER PIPE AND FITTINGS

A. All above-ground dry pipe automatic sprinkler system pipe and fittings shall meet the following criteria:

1. Threaded: Black steel pipe Schedule 40. Piping with a lesser schedule value (thinner walled pipe i.e. "Dyna-Thread", XL, Schedule 10, or other Schedule 40 "Replacement" pipe) will not be allowed for threaded or cut groove connections regardless of the corrosion resistance ratio.

2. Roll Grooved: Black steel pipe either having a minimum wall thickness in accordance with Schedule 10 or Schedule 40.

3. Grooved Fittings and Couplings: All grooved fittings and couplings shall be manufactured to ASTM A536 requirements for ductile iron castings. The couplings shall consist of two ductile iron housing segments with a flush type elastomer pressure responsive gasket and zinc electroplated bolts and nuts.

   a. Rigid Style Grooved Couplings: All rigid style couplings shall consist of housings casted with an offset, angle pattern bolt pads to provide rigidity and system support. The coupling installation shall be complete at visual, pad–to-pad offset contact. Rigid couplings that require exact gapping of bolt pads at specified bolt torques are not permitted. Grooved couplings that are "Installation-Ready" for direct stab installation without field disassembly are acceptable.

   b. Flexible Style Grooved Couplings: All flexible style couplings shall consist of housings casted with parallel pattern bolt pads to provide flexibility for vibration attenuation, stress relief, or seismic movement. The coupling installation shall be complete at visual, pad–to-pad contact. Flexible couplings that require exact gapping of bolt pads at specified bolt torques are not permitted. Grooved couplings that are "Installation-Ready" for direct stab installation without field disassembly are acceptable. Grooved couplings that are "Installation-Ready" for direct stab installation without field disassembly are acceptable.

   c. Gaskets: All gaskets for dry systems shall be <u>Flush Seal or flush Gap</u> style Grade "E" Type "A" EPDM. All gaskets installed in areas with high ambient temperatures shall be Grade "EHP" EPDM. All gaskets installed in areas where the ambient temperature is below 40°F shall be Grade "L" (Silicone) EDPM.

   d. All grooved couplings and fittings shall be the products of a single manufacturer.

4. All fire protection piping and fittings (above-ground) shall be threaded, grooved, or flanged end fittings. The use of plain end, lock-type, friction type, compression type, or any other type of fitting that is plain end ("prepared end", "polished end", beveled end, "FIT" end such as Victaulic "FIT", Gruvlok "Sock-It", Victaulic "Pressfit") is not permitted.

5. Welded Outlets and Drilled Outlets for Mechanical Tees: Use outlets for main, branch line, arm-overs, drops, and sprigs only and shall be UL listed or Factory Mutual Global approved. Welded outlets with grooved ends shall have a nominal diameter equal to or smaller than the pipe to which they are attached. Welded outlets with threaded ends and drilled outlets for mechanical tees shall have nominal size outlets at least one pipe diameter smaller than the pipe to which they are attached.

6. Supply Piping From the Flange Above Finished Floor to the Backflow Preventer: Provide cement mortar lined Class 52 ductile iron piping. If acceptable by the Authority Having Jurisdiction, provide AWWA standard bell and spigot Class 150 ductile iron piping, C-900 Class 200 DR14 UL labeled PVC pipe, or type 304 or 316 stainless steel piping may be installed. All fittings shall be UL listed or F.M. approved for fire protection installations, shall utilize full flow standard radius fittings, and shall match the type of underground piping to be installed.

7. Approved manufacturers are as follows:

   a. Black Steel Pipe: AMS Tube Corporation, Bull Moose Tube Company, Charlotte Pipe and Foundry Company, North West Pipe and Casing, State Pipe and Supply Company, Wheatland Tube Company, Youngstown Tube, or prior approved equal.

   b. Threaded Products: Anvil International, Ward, Youngstown Tube, or prior approved equal.

   c. Grooved Products: Gruvlok, Tyco, Victaulic, or prior approved equal.

   d. Factory Segmentally Welded Grooved Products: Iowa Fittings, TexLine, Victaulic, or prior approved equal.

   e. Flanged Products: American Cast Iron Pipe Company, Anvil International, Merit Manufacturing (Mueller), Trinity Valley Iron & Steel Company, Pacific Coast Flange Incorporated, Tyler Pipe, Union Foundry Company, U.S. Pipe and Foundry Company, Ward, or prior approved equal.

   f. Welded Outlets: Anvil International, Island Fitting, Merit Manufacturing (Mueller), NAP (North Alabama Pipe Corporation), Ward, or prior approved equal.

g. Ductile Iron Pipe: American Cast Iron Pipe Company, Pacific States Cast Iron Pipe Company, U.S. Pipe and Foundry Company, or prior approved equal.

h. Mechanical Joint Products: American Cast Iron Pipe Company, EBBA Iron Incorporated, Pacific States Cast Iron Pipe Company, U.S. Pipe and Foundry Company, or prior approved equal.

i. P.V.C. Pipe: Diamond Plastics Corporation, Johns Manville (Blue Brute), North American Pipe Corporation, PW Pipe, or prior approved equal.

j. Stainless Steel Fittings: Anvil International, Greensboro Pipe Company, Merit Brass, Victaulic, or prior approved equal.

k. Stainless Steel Pipe: Alaska Copper and Brass, American Pipe and Supply, Greensboro Pipe Company, Merit Brass, or prior approved equal.

2.03 SPRINKLERS

A. Provide minimum nominal ½-inch orifice commercial sprinklers with a release mechanism meeting the requirements of NFPA #13 for thermal sensitivity and temperature rating. Commercial sprinklers less than ½-inch orifice will not be allowed unless prior approval is obtained.

B. Provide Nickel-Teflon coated or VC-250 coated sprinklers beneath exterior roofs and overhangs.

C. The Fire Protection Sprinkler System Contractor shall provide intermediate temperature sprinklers for all locations required by NFPA #13 to be of ordinary temperature rating thereby reducing the necessity for multiple temperature ratings of sprinklers to be installed.

D. Provide sprinkler head guards on exposed piping installed at an elevation less than 8'-0", or in areas subject to mechanical damage.

E. All sprinkler head guards shall be specifically listed for the sprinkler in which they are protecting.

F. Approved manufacturers are as follows:

1. Sprinklers: Reliable, Tyco, Victaulic, Viking, or prior approved equal.

2. Sprinkler Head Guards: Reliable, Tyco, Victaulic, Viking, or prior approved equal.

2.04 SPARE SPRINKLER CABINET

A. Provide a metal cabinet for the storage of spare sprinklers and sprinkler wrenches (adjacent to the sprinkler riser) for each building receiving a fire protection sprinkler system.

B. The number and types of extra sprinklers shall be as specified in NFPA #13 with one sprinkler wrench being provided for each type of sprinkler installed.

C. Spare sprinkler wrenches from the sprinkler manufacturer shall be provided by the Fire Protection Sprinkler System Contractor.

D. Spare sprinkler wrenches or other means of removing sprinklers (crescent wrenches for example) that are not approved by the sprinkler manufacturer shall not be provided.

2.05 BACKFLOW PREVENTER

A. Provide a letter of certification to the Owner after testing.

B. The backflow preventer type shall conform to local water purveyor requirements.

C. The backflow preventer shall be a double detector check valve assembly style made from cast iron or fabricated stainless-steel body consisting of (2) independent check valves, (2) OS&Y or butterfly shut-off valves, (4) ball type test cocks, a bypass valve, and meter trim.

D. The backflow preventer shall conform to UL, Factory Mutual Global, FCCC, and HR flow rate with maximum velocity across the backflow preventer of 16 feet per second.

E. The backflow preventer type and installation configuration shall be listed in the "Backflow Prevention Assemblies Approved for Installation in Washington State" from the Washington State Department of Health.

F. Provide backflow preventer assembly with a permanently installed water pressure gauge with a ball valve on the supply side and discharge side of the assembly.

G. Approved manufacturers are as follows:

1. Backflow Preventers: Ames, Conbraco, Watts, Wilkins, or prior approved equal.

2.06 FIRE DEPARTMENT CONNECTIONS

A. Provide a fire department connection approximately 2'-0" to 4'-0" above the finished grade in a location (on the wall) allowed by the authority having jurisdiction.

B. The fire department connection is to be an approved two-way type with 2½" female National Standard hose thread inlets and a 4" female National Pipe Thread or grooved pipe connection.

C. Provide the fire department connection with a clapper, cap, and chain for each inlet and a single identification escutcheon plate.

D. At the low point near each fire department connection, install a 90-degree drain elbow with a ½" outlet for installation of a ball drip for system drainage to prevent freezing.

E. Approved manufacturers are as follows:

1. Fire Department Connections: Croker, Elkhart, Guardian, Potter Roemer, Powhattan, or prior approved equal.

2.07 HOSE VALVES FOR FULL FORWARD FLOW TESTING OF THE BACKFLOW PREVENTER

A. Provide full forward flow testing hose valves approximately 2'-0" to 4'-0" above the finished grade in a location on the exterior wall.

B. Provide downstream of the backflow prevention assembly either 2½" angled hose valves or 2½" straight pattern hose valves for full forward flow testing of the backflow preventer.

C. Provide (1) 2½" hose valve for each 250 g.p.m. of system demand.

D. Provide a brass valve body with brass internal parts, natural rubber seal, ductile iron hand wheel, 2½" National Pipe Thread by male hose thread outlet.

E. Provide each hose valve with a cap and chain.

F. Valve shall be rated for a working pressure of at least 300 p.s.i.

G. Approved manufacturers are as follows:

1. Hose Valves: Croker, Elkhart, Guardian, Nibco, Potter Roemer, Powhattan, or prior approved equal.

2.08 VALVES

A. Provide valves of types approved for fire service in accordance with NFPA #13.

B. Control valves for fire protection systems shall be either NRS, OS&Y or butterfly style.

C. All butterfly style valves shall be provided with an integral tamper switch and weatherproof actuator.

D. All butterfly style valves shall either have:

1. A "resilient seated" or "rubber seated" concentric design. The stem and disc are centered in the seat of the valve, all of which are centered in the body of the valve.

2. A pressure responsive seat with stem that is offset from the disc centerline to provide complete 360-degree circumferential seating.

E. Check valves shall be grooved or flanged clear opening spring assisted swing-check type for vertical or horizontal installation of sizes 2½" and larger (butterfly style check valves are not allowed).

F. Approved manufacturers are as follows:

1. Butterball Valves: Milwaukee, Nibco, Victaulic, or prior approved equal.

2. Butterfly Valves: Anvil International (Gruvlok), McWane (Kennedy), Nibco, Tyco, Victaulic, or prior approved equal.

3. Ball Valves: Anvil International, Milwaukee, Nibco, United Brass, Victaulic, Watts, or prior approved equal.

4. Check Valves: Anvil International (Gruvlok), Reliable, United Brass, Victaulic, Viking, or prior approved equal.

5. N.R.S. Gate Valves: McWane (Kennedy), Mueller, Nibco, Victaulic, Wilkins, or prior approved equal.

6. OS&Y Gate Valves: AVK, McWane (Kennedy), Mueller, Nibco, Victaulic, Wilkins, or prior approved equal.

2.09 DRY PIPE VALVES

A. Provide a dry pipe valve for each system complete with control valve, main drain valve, pressure gauge and all accessories for a code compliant fire protection riser.

B. The dry pipe valve shall operate be one of the following principals:

1. A water to air p.s.i. ratio not less than 5 to 1.

2. An air operating pressure of 13 p.s.i.

C. The internal components of the dry pipe valve shall be externally resettable without requiring the removal the dry pipe valve cover plate.

D. Approved manufacturers are as follows:

1. Dry Pipe Valves: Reliable, Tyco, Victaulic, Viking, or prior approved equal.

2.10 PRIMING WATER CONNECTION

A. Provide an outlet on the system manifold that consists of a ball valve with copper- tubing that is routed to the fill cup for the priming water supply of the dry pipe valve.

B. In lieu of a priming water connection, a dry pipe valve with an internal priming chamber will be acceptable.

2.11 QUICK OPENING DEVICES (ACCELERATORS)

A. Provide a quick-opening device (accelerator) by the same manufacturer as the dry pipe valve for systems when required by paragraph 3.11 of this specification section.

B. The quick opening device shall have an integral anti-flooding device to prevent water or contamination from entering the internal restriction areas of the accelerator and shall be installed at the system riser.

C. Approved manufacturers are as follows:

1. Accelerators: Reliable, Tyco, Victaulic, Viking, or prior approved equal.

2.12 PRESSURE SWITCH – ALARM

A. The Pressure Switch – Alarm shall contain (2) sets of single pole / double throw (SPDT) Form "C" contacts for the automatic transmittal of an alarm over the facility fire alarm system.

B. The Pressure Switch shall be tamper resistant and shall be equipped with a silicone rubber gasket to assure a positive water seal and a dustproof cover to seal the flow switch mechanism from dirt and moisture.

C. The Pressure Switch is to be installed by the Fire Protection Sprinkler System Contractor and wiring of the Pressure Switch is be performed by the Electrical Contractor.

D. Approved manufacturers are as follows:

1. Pressure Switch - Alarm: Potter Electric, System Sensor, or prior approved equal.

2.13 PRESSURE SWITCH - SUPERVISORY AIR

A. The Pressure Switch – Supervisory Air shall contain (2) sets of single pole / double throw (SPDT) Form "C" contacts for the automatic transmittal of a supervisory condition to the facility fire alarm system when the air pressure in the fire protection sprinkler system becomes low.

B. The Pressure Switch is to be installed by the Fire Protection Sprinkler System Contractor and wiring of the Pressure Switch is be performed by the Electrical Contractor.

C. Approved manufacturers are as follows:

1. Pressure Switch – Supervisory Air: Potter Electric, System Sensor, or prior approved equal.

2.14 TAMPER SWITCHES

A. Provide tamper switches that are suitable for mounting to the type of control valve to be supervised either in the open or closed position.

B. The tamper switch shall contain (1) set of single pole / double throw (SPDT) Form "C" contacts arranged to transfer upon opening or closing of the valve of more than two rotations of the valve stem.

C. Tamper switches shall be tamper resistant and shall be provided for all control valves, backflow preventer valves, post indicating valves, or any other valve used for system shutdown.

D. Approved manufacturers are as follows:

1. Tamper Switches: Potter Electric, System Sensor, or prior approved equal.

2.15 AIR COMPRESSORS

A. Provide an air compressor that is an automatic electric motor-driven type with a 10-gallon minimum air tank.

B. The air compressor shall be sized such that the time to charge the complete sprinkler system to normal system air pressure is less than 30 minutes.

C. The size of the air compressor motor shall be based upon the capacity of the dry pipe system divided by the c.f.m. output of the compressor under normal operating conditions.

D. The selection of the air compressor motor shall be sized not to exceed a 1 H.P. motor rated for a _____ Volts A.C. _____ phase power source.

E. The air compressor may allow the tank to be pressurized to a minimum of 110 p.s.i. before the motor shuts off, but is not required.

F. The air compressor shall be bolted to spring isolators that are to be located at each corner of the mounting base to minimize vibration transmissions to the building structure. See the paragraph below contained in this specification section for requirements on spring isolators.

2.16 AIR MAINTENANCE DEVICES

A. Provide a UL listed or Factory Mutual Global approved fire protection system automatic air maintenance device for each system riser.

B. The air maintenance device shall regulate the air pressure contained within the dry system piping between 30 p.s.i. and 40 p.s.i.

C. Approved manufacturers are as follows:

1. Air Maintenance Device: General Air Products, Reliable, Tyco, Victaulic, Viking, or prior approved equal.

2.17 INSPECTOR'S TEST CONNECTION

A. Provide test connections approximately 6 feet above the floor for each sprinkler system or portion of each sprinkler system equipped with an alarm device.

B. The Inspector’s test connection shall be located at the most remote part of each system.

C. All inspectors’ test connection drain discharges shall be piped down the wall to an elevation approximately 6" above exterior grade before penetrating the exterior wall.

D. Provide test connection discharge piping to a location where the discharge will be readily visible and where water may be discharged without property damage.

E. The Inspector’s Test Connection shall terminate with a down turned 45° elbow and a galvanized cast-iron wall plate.

F. Exterior discharge shall be placed to minimize impacts on landscaping features and coordinated with the General Contractor and building Owner.

G. Provide a sight glass when the inspectors test discharge cannot be readily visible.

H. The Inspector’s test valves installed in finished areas shall be recessed in the wall and provided with a lockable access door.

I. Inspector’s test discharge orifice shall be a smooth bore corrosion resistant orifice giving a flow equivalent to one sprinkler of a type having the smallest orifice installed on that system.

J. The inspector’s test discharge shall not terminate on the roof or on the roof of a building overhang.

K. The inspector’s test discharge shall be piped down to discharge just above exterior grade level.

L. The piping shall be located inside a wall or vertical shaft in finished areas.

M. Any inspector's test connection that discharges in landscaped areas or locations in which damage to owner property will occur shall be provided with a concrete splash block.

2.18 COMBINED INSPECTOR'S TEST AND DRAIN ASSEMBLY

A. The inspector’s test connection and the auxiliary drain valve may be combined into a listed unit that performs both functions.

B. The assembly shall be capable of providing a discharge flow equivalent to one sprinkler of a type having the smallest orifice installed on that system or full flow equivalent to the pipe size serving the assembly.

C. The assembly shall also contain a sight glass that allows for visual verification of water flow.

D. The combined inspector’s test and auxiliary drain discharge shall be piped down the wall to an elevation approximately 6" above exterior grade before penetrating the exterior wall.

E. All combined inspector’s test and auxiliary drain discharge shall terminate with a down turned 45° elbow and a galvanized cast-iron wall plate.

F. Exterior discharge shall be placed to minimize impacts on landscaping features and coordinated with the General Contractor and building Owner.

G. The combined inspector’s test and drain (main or auxiliary) discharge shall not terminate on the roof or on the roof of a building overhang.

H. The combined inspector’s test and drain discharge assembly shall be piped down to discharge just above exterior grade level.

I. The piping shall be located inside a wall or vertical shaft in finished areas.

J. Any combined inspector's test and drain assembly that discharges in landscaped areas or locations in which damage to owner property will occur shall be provided with a concrete splash block.

K. Approved manufacturers are as follows:

1. Combined Inspector's Test and Drain Assemblies: AGF Manufacturing, FPPI (Sure-Test), Victaulic (TestMaster II), or prior approved equal.

2.19 DRAINS

A. Provide main drain discharge piping to a provided hub drain of adequate size to readily receive the full flow from the main drain through a 2" air gap.

B. Provide auxiliary drains for trapped sections of system piping in accordance with NFPA #13

C. All auxiliary drain valves shall be piped down to an elevation less than 6'-0" above finished floor.

D. Auxiliary drain valves installed in finished areas shall be recessed in the wall and provided with a lockable access door.

E. Coordinate all drain locations with the General Contractor and building Owner.

F. All drain discharges shall terminate with a down turned 45° elbow and a galvanized cast-iron wall plate.

G. Exterior discharge shall be placed to minimize impacts on landscaping features and coordinated with the General Contractor and building Owner.

H. Termination of main drains or auxiliary drains that allow the discharged water to flow across concrete, asphalt, roof, building overhang roof, gutter, or other finished material will not be allowed.

I. Any drain that discharges in landscaped areas or locations in which damage to owner property will occur shall be provided with a concrete splash block.

2.20 PIPE HANGERS

A. Hanger components that attach directly to sprinkler piping or the building structure shall be UL listed or Factory Mutual Global approved.

B. Hanger components shall be connected directly to major frame members (Rigid Frames, CMU, Girder Trusses, etc.) wherever possible with connections to secondary framing members (joists, purlins, etc.) being made only when necessary and shall be coordinated with the Structural Engineer.

C. Hangers shall not attach directly to metal decking without exception, unless the metal deck is provided with a concrete topping.

D. All C-clamp type hangers shall be fitted with retainer straps.

E. Hangers consisting of a hanger ring, all thread rods, and a hanger ring attached to a pipe at a higher elevation will not be allowed.

F. All pipe stands shall be constructed of a minimum 2" diameter steel pipe.

G. Post-installed concrete anchors shall have passed the ACI 355.2 cracked concrete test. Approved manufacturers are as follows:

1. Hangers: Afcon (Anvil International), Erico (nVent), PHD, Tolco (Eaton), or prior approved equal.

2. Attachments: Hilti, ITW Ramset, Powers Fastening Innovations, Simpson Manufacturing Company, ITW (Sammy), DeWalt (HangerMate), or prior approved equal.

2.21 SEISMIC BRACING COMPONENTS

A. Seismic braces shall be connected directly to major frame members (Rigid Frames, CMU, Girder Trusses, etc.) wherever possible with connections to secondary framing members (joists, purlins, etc.) being made only when necessary and shall be coordinated with the Structural Engineer.

B. Seismic braces shall not attach directly to metal decking without exception unless the metal deck is provided with a concrete topping.

C. Post-installed concrete anchors shall have passed the ACI 355.2 cracked concrete test.

D. Approved manufacturers are as follows:

1. Seismic Braces: Afcon (Anvil International), Erico (nVent), Tolco (Eaton), or prior approved equal.

2. Attachments: Hilti, ITW Ramset, Powers Fastening Innovations, Simpson Manufacturing Company, ITW (Sammy), DeWalt (HangerMate), or prior approved equal.

2.22 WATER PRESSURE GAUGES

A. Each system shall have permanently installed stainless steel pressure gauges to provide visual supervision of the water pressure.

B. Each water pressure gauge shall be provided with a ball valve for easy water pressure gauge replacement without shutting down the system.

C. Provide a minimum 3½" diameter pressure gauge with a ¼" national pipe thread connection.

D. The pressure gauge shall have an accuracy of 3-2-3% over the range of the gauge per ASME B40.100 (3% over the first ¼ of the gauge range, 2% over the middle ½ of the gauge range, and 3% over the last ¼ of the gauge range).

E. The pressure gauge shall be calibrated to register up to a maximum of 300 p.s.i. for static water pressures less than 175 p.s.i. and a minimum of 50 p.s.i. above static water pressure when the static water pressure exceeds 175 p.s.i.

F. Provide a water pressure gauge in the following locations at a minimum.

1. Supply side of the backflow preventer check valves to read the system supply pressure.

2. Discharge side of the backflow preventer check valves to read the pressure drop across the backflow assembly.

3. On the system riser below the dry pipe valve and above all check valves to read the system pressure.

G. Approved manufacturers are as follows:

1. Water Pressure Gauges: Argco, Ashcroft, Moeller Instrument Company Inc., Potter Roemer, Reliable, US Gauge Products, Victaulic, Wika, or prior approved equal.

2.23 AIR PRESSURE GAUGES

A. Each pneumatic air system shall have permanently installed stainless steel pressure gauges to provide visual supervision of the air pressure contained within the dry pipe sprinkler system.

B. Each air pressure gauge shall be provided with a ball valve for easy air pressure gauge replacement without shutting down the system.

C. Provide a minimum 3½" diameter pressure gauge with a ¼" national pipe thread connection.

D. The pressure gauge shall have an accuracy of 3-2-3% over the range of the gauge per ASME B40.100 (3% over the first ¼ of the gauge range, 2% over the middle ½ of the gauge range, and 3% over the last ¼ of the gauge range).

E. The pressure gauge shall be calibrated to register up to a maximum of 80 p.s.i.

F. Provide an air pressure gauge in the following locations at a minimum.

1. On the system riser above the dry pipe valve to read the system air pressure.

G. Approved manufacturers are as follows:

1. Air Pressure Gauges: Argco, Ashcroft, Moeller Instrument Company Inc., Potter Roemer, Reliable, US Gauge Products, Victaulic, Wika, or prior approved equal.

2.24 ACCESS DOORS

A. Provide access doors for the following components:

1. Auxiliary drain valves installed in finished areas

2. Drum drip assemblies installed in finished areas

3. Inspector's test valve installed in finished areas

B. Access doors shall be installed at an elevation approximately 5'-0" above finished floor.

C. Access doors in rated walls shall be fire rated with 2" of insulation sandwiched between an inner and outer door panels.

D. Access doors in non-rated walls are not required to be fire rated.

E. The access doors shall be cold rolled steel and constructed with a minimum 18 gauge frame and an 18 gauge door panel minimally.

F. Access doors shall be a minimum of 9" X 9" in size for auxiliary drain valves.

G. Access doors shall be a minimum of 18" X 18" in size for control valve loops and drum drip assemblies.

H. Access doors shall mount flush to the finished wall and are not allowed to be surface mounted, unless the wall is CMU or concrete.

I. Access doors shall be UL listed or Factory Mutual Global approved and shall have a hinge, key operated lock, and a baked-on primer coating.

J. Approved manufacturers are as follows:

1. Access Doors: Acudor, Elmdor, Greenheck, JL Industries, Nystrom, or prior approved equal.

2.25 WALL PLATES

A. Provide a split hinge type metal plate or split plastic plate for piping passing through walls, floors, platforms, and ceilings installed in exposed spaces.

B. Wall plates shall either be chrome plated or paintable white finish.

C. Wall plates on the exterior of the building shall be galvanized cast-iron.

2.26 OVERSIZED ESCUTCHEON TRIM RINGS

A. The Fire Protection Sprinkler System Contractor shall provide oversized escutcheon trim rings to conceal the suspended acoustical tile ceiling system penetrations that are oversized to meet the requirements of the International Building Code (I.B.C.) and ASCE 7.

B. The oversized escutcheon trim rings shall be the same finish as the sprinkler and escutcheon in which it is to be installed.

C. The oversized escutcheon trim rings shall be made of cold rolled steel to maintain the fire ratings. Plastic or other materials will not be allowed.

D. The oversized escutcheon shall be recessed in the middle where the sprinkler escutcheon sits to create a flat profile. Oversized escutcheon rings that are not recessed in the middle will not be allowed.

E. Approved manufacturers are as follows:

1. Oversized Escutcheon Trim Rings: Fire Lock (Victaulic), or prior approved equal.

2.27 LIST OF SPRINKLERS

A. The Fire Protection Sprinkler System Contractor shall provide a typed list of all sprinklers installed in the project per the requirements of NFPA #13.

B. The typed list shall be placed within the spare sprinkler cabinet and shall identify each sprinkler by Sprinkler Identification Number, manufacturer, model, orifice, deflector type, thermal sensitivity, and pressure rating.

C. The typed list shall also provide a general description, the quantity of each type of sprinkler provided within the spare sprinkler cabinet, and the date the list was generated.

2.28 IDENTIFICATION SIGNS

A. Provide a permanently marked metal or engraved rigid plastic identification sign with proper lettering and secured with corrosion resistant wire, chain, or other approved methods for all control valves, drain valves, inspector’s test valves, and fire department connection zones in accordance with NFPA #13.

2.29 HYDRAULIC SIGNS (PLACARDS)

A. Each sprinkler system riser shall have the NFPA #13 required hydraulic sign placed near the control valve that is permanently marked and made either of weatherproof metal, rigid plastic, or weatherproof tyvek.

B. The hydraulic sign shall be permanently secured with corrosion resistant wire, chain, or adhesive backing.

C. The hydraulic sign shall identify the location of the design area, discharge density, design area size, system demands at the base of riser, hose stream allowances, current water flow information, and auxiliary design parameters (densities and areas) associated with the system installed.

2.30 GENERAL INFORMATION SIGNS (PLACARDS)

A. Each sprinkler system riser shall have the NFPA #13 required general information sign placed near the control valve that is permanently marked and made either of weatherproof metal, rigid plastic, or weatherproof tyvek.

B. The general information sign shall be permanently secured with corrosion resistant wire, chain, or adhesive backing.

C. The general information sign shall identify the name and location of the facility protected, flow test data, location of all auxiliary drains and low point drains, original results of main drain flow test, name of installing Fire Protection Sprinkler System Contractor or designer, and the indication of presence or location of anti-freeze or other auxiliary systems.

PART 3 - EXECUTION

3.01 INSTALLATION

A. Installation, workmanship, fabrication, assembly, erection, examination, inspection, and testing shall be in accordance with NFPA #13, except as modified herein.

B. All piping and fittings installed prior to the backflow preventer are considered part of the potable water system and shall be required to be of a type that maintains a clean and rust free potable system. The use of black and galvanized pipe and fittings on the potable waterside of the backflow preventer will not be allowed.

C. Cutout disks that are created when cutting in mechanical tee type outlets shall be secured with nylon zip ties or metal wiring near the location from which the cutout disk was cut.

D. Grooved couplings and fittings shall be installed in accordance with the manufacturer's recommendations. Grooved ends shall be clean and free from indentations, projections, and roll marks in the area from the pipe end to the groove. Grooved coupling gaskets shall be molded and produced by the coupling manufacturer.

E. The Fire Protection Sprinkler System Contractor shall remove and replace any piping joints deemed improperly installed or show signs of leakage.

F. The Fire Protection Sprinkler System Contractor shall remove and replace any piping that has been damaged upon installation and shows signs of being bent, warped, or dented.

G. Do not install sprinklers that have been dropped, damaged, show signs of corrosion, show signs of foreign matter buildup, show signs of a cracked glass bulb, or show a visible loss of fluid.

H. The glass bulb protector shall remain in place until the sprinkler is completely installed. The Fire Protection Sprinkler System Contractor shall remove the glass bulb protector by hand after installation and prior to the sprinkler system being placed in service. The use of tools or devices to remove the glass bulb protector is not allowed.

I. Install piping straight and true to bear evenly on hangers and supports. Hangers for piping to attach to structural members with no hanger being attached to acoustical ceiling tiles or gypsum wallboard ceilings.

J. All sprinklers installed to protect the area under ductwork or similar obstructions shall be restrained from lateral movement.

K. Ends of new piping and existing piping affected by the Fire Protection Sprinkler System Contractor's operations shall be thoroughly cleaned of water, cutting oil, and foreign matter. Keep piping systems clean during installation by means of plugs or other approved methods and securely close open ends of piping when work is not in progress to prevent entry of foreign matter. Inspect all piping before placing into position for foreign matter and remove as necessary.

L. All piping in finished areas shall be installed concealed above the ceiling space unless specifically noted otherwise.

M. In rooms with exposed structure, the fire protection sprinkler system piping shall be installed as tight to structure as possible and shall be installed to minimize piping offsets.

N. Any portion of the sprinkler system that is not indicated on the contract documents to be installed exposed shall be addressed in writing with sketches (prior to the piping being fabricated or installed) to the Architect and Engineer to evaluate.

O. Install piping at such heights and in such a manner so as not to obstruct any portion of windows, doorways, passageways, or lights. Coordinate installation of piping with all trades (mechanical, electrical, plumbing, and structural) to avoid conflicts and offset piping as required to clear any interferences that may occur.

P. Install piping at such heights and in such a manner so as not pose hazards to normal walking head heights, impact the minimum clear height requirements or present tripping hazards.

3.02 RESTRAINT OF SPRINKLER SYSTEM BRANCH LINES

A. Sprinkler system branch lines shall be laterally restrained at intervals not exceeding those specified in Table 9.3.6.4(a) of NFPA #13 and are based upon the branch line diameter and the seismic coefficient value of C_p.

B. Branch Line Restraint shall not attach directly to metal decking without exception unless the metal deck is provided with a concrete topping.

C. Means of providing branch line restraint shall comply with one of the means contained within Section 9.3.6.1 of NFPA #13.

3.03 SPRINKLER PROTECTION OF EXTERIOR OVERHANGS AND CANOPIES

A. Provide sprinkler protection beneath all exterior overhangs and canopies that exceed 4'-0" in depth in which any member that comprises the exterior overhang and canopy is of combustible construction (entire canopy construction, not just exposed surface).

B. Provide sprinkler protection beneath all exterior overhangs and canopies that exceed 2'-0" in depth, where the area underneath the exterior overhang and canopy is used for the storage or handling of combustibles regardless of the construction type.

C. Provide sprinkler protection inside all exterior overhangs and canopies comprised of combustible construction and the clear space between framing members exceeds 6" in height.

D. Provide sprinkler protection inside and beneath all exterior overhangs and canopies required by the local Authority Having Jurisdiction and as indicated on the contract documents.

3.04 PURITY TESTING OF PIPING INSTALLED BEFORE BACKFLOW PREVENTION DEVICE

A. Disinfect the new potable water piping affected by the Fire Protection Sprinkler System Contractor's operations in accordance with the health authority, water purveyor having jurisdiction, AWWA C651, and AWWA C652.

3.05 PREPARATION OF SPRINKLER PIPING FOR PAINTING IN EXPOSED AREAS

A. The Fire Protection Sprinkler System Contractor shall clean the exterior surface to the sprinkler piping that is to be painted. The piping shall be cleaned and prepped in the following manner.

1. The Fire Protection Sprinkler System Contractor shall remove all pipe tags or fabrication labels that have been adhered to the sprinkler system piping as part of the listing/fabrication process.

2. Any adhesive that remains on the sprinkler piping after removal of the pipe tags or fabrication labels shall be removed with an acceptable adhesive solvent.

3. All sprinkler piping and fittings that show signs of surface rust shall be sanded to remove the rust from the sprinkler piping.

4. Sprinkler system piping shall be wiped down with a solvent soaked rag to remove cutting oil residue, finger prints, adhesive solvents, and other foreign materials that could prevent the primer and/or finished color coats of paint from adhering properly to the sprinkler system piping.

3.06 PROTECTION OF SPRINKLERS DURING PAINTING OR SPRAY APPLICATIONS

A. The Fire Protection Sprinkler System Contractor shall provide and install a suitable means of protecting the sprinklers against the accumulation of foreign matter build up during the time that the exposed structure is either being painted, having fire proofing applied, or during other applications that put particulates into the air that potentially could collect upon the sprinklers.

B. At the conclusion of the processes listed above, the Fire Protection Sprinkler System Contractor shall be responsible for removing the protective coverings, visually inspecting the sprinklers for foreign matter build-up, and shall replace all sprinklers where build-up of foreign matter is observed at no additional cost to the owner.

3.07 HYDROSTATIC TEST

A. Hydrostatically test each system at 200 P.S.I. or 50 P.S.I. in excess of the systems working pressure (whichever is greater), for a 2-hour period with no leakage or reduction in pressure.

B. Piping above ceilings shall be tested, inspected, and approved before installation of ceiling material.

C. When tests have been completed and corrections made, submit a signed and dated certificate similar to that specified in NFPA #13.

3.08 AIR PRESSURE TEST – DRY PIPE SYSTEM

A. As specified in NFPA #13, an air pressure leakage test at 40 p.s.i. shall be conducted for 24 hours.

B. The test piping shall include all piping downstream of the air maintenance device.

C. There shall be no drop-in gauge pressure in excess of 1.5 p.s.i. for the 24-hour test.

D. This air pressure test is in addition to the required hydrostatic test.

E. Air leaks shall be fixed by tightening the piping connections or by replacing installed components.

F. When the Air Pressure Test – Dry Pipe System has been completed submit a signed and dated certificate to the Fire Protection Engineer for review and/or approval.

3.09 TRIP TIME / WATER DELIVERY TIME TEST

A. A trip time / water delivery time test shall not be required on dry pipe automatic fire protection sprinkler systems in which the total system air capacity is 500 gallons or less.

B. A trip time / water delivery time test shall not be required on dry pipe automatic fire protection sprinkler system in which the total system air capacity is 750 gallons or less that have a quick opening device (accelerator) installed.

C. A trip time / water delivery time test shall be required for all dry pipe automatic fire protection sprinkler system that have a system air capacity larger than 500 total gallons that do not have a quick opening device (accelerator) installed. The trip test / water delivery time shall be conducted at the inspector's test valve and shall discharge water from the test port (smooth bore orifice or sight glass) with a 60 second time period.

D. A trip time / water delivery time test shall be required for all dry pipe automatic fire protection sprinkler system that have a system air capacity larger than 750 total gallons. The trip test / water delivery time shall be conducted at the inspector's test valve and shall discharge water from the test port (smooth bore orifice or sight glass) with a 60 second time period.

E. When the dry pipe automatic fire protection sprinkler system requires the trip time / water delivery time test and the 60 second time limit is exceeded, the Fire Protection Sprinkler System Contractor shall provide a quick opening device (accelerator) to speed up the water delivery time.

F. When the dry pipe automatic fire protection sprinkler system requires the trip time test / water delivery time and the 60 second time limit is exceeded with a quick opening device (accelerator) being installed, the Fire Protection Sprinkler System Contractor shall provide an additional dry pipe automatic fire protection sprinkler system to reduce the overall total system air capacity at no additional cost to the owner.

G. When the trip time / water delivery time test has been completed submit a signed and dated certificate to the Fire Protection Engineer for review and/or approval.

3.10 FORMAL TESTS AND INSPECTIONS

A. Do not submit a request for formal test and inspection until the preliminary test and corrections are completed and approved.

B. An experienced technician regularly employed by the system installer shall be present during the inspection.

C. At this inspection, repeat any or all of the required tests as directed.

D. Correct defects in work provided by the Fire Protection Sprinkler System Contractor, and make additional tests until the system(s) comply with contract requirements.

E. Furnish appliances, equipment, electricity, instruments, connecting devices and personnel for the tests.

F. The Owner will furnish water for the tests.

G. Furnish Architect with three (3) copies of certificates required by testing agencies that shall contain the results from the three pressure tests described above as a minimum.

3.11 TRAINING PERIOD

A. Upon completion of the work and after all tests and inspections by the authority(s) having jurisdiction, the Fire Protection Sprinkler System Contractor shall demonstrate and train the Owner's designated operation and maintenance personnel in the operation and maintenance of the fire protection system.

B. The Fire Protection Sprinkler System Contractor shall arrange scheduled instruction periods with the Owner’s designated operation and maintenance personnel.

C. The Fire Protection Sprinkler System Contractor's representatives shall be superintendents or foremen who are knowledgeable in each system and supplier’s representatives when so specified.

D. Scheduled training periods shall be based upon complexity of the system installed, but in no case, be less than indicated in Paragraph 3.04 of Section 21 0000.

E. Upon request of the Owner, a DVD of the training period shall be made available by the Fire Protection Sprinkler System Contractor at no additional cost to the Owner.

END OF SECTION

SECTION 22 0300

EXCAVATION AND BACKFILL FOR MECHANICAL UNDERGROUND UTILITIES

PART 1 - GENERAL

1.01 GENERAL INCLUDES

A. Excavation and Associated Grading

B. Trenching and Trench Protection

C. Backfilling and Compaction

D. Verification of Existing Utilities

E. Protection of Utilities

1.02 RELATED SECTIONS

A. Section 22 1005 - Plumbing Piping

B. Section 23 1100 - Natural Gas

1.03 QUALITY ASSURANCE

A. Inspection of Job Conditions: Prior to starting work and during work, the installer shall examine the work by others, site and job conditions under which excavation, trenching, and backfilling for underground utilities work will be performed, and notify the General Contractor in writing of unsatisfactory conditions or work. Do not proceed with work until unsatisfactory conditions have been corrected in a manner acceptable to the Installer.

B. Codes and Standards: Comply with requirements of the following codes and standards (Latest Edition) except as modified herein:

1. International Conference of Building Officials, "Uniform Building Code"

2. Local requirements for all utility work

3. OSHA and WISHA regulations

4. APWA Standard Specifications

1.04 RESPONSIBILITY

A. The Contractor is solely responsible for compliance with the requirements of the drawings, specifications, local codes and standards, proper construction coordination with work of other trades, and protection and worker's safety. Contractor shall advise Design Consultant of any discrepancy in, or disagreement with the specifications and/or drawings prior to starting work and not proceed until issue is resolved. Commencement of work shall indicate Contractor's acknowledgement of his expertise in this type of work. Any delay resulting from failure to comply with this procedure will not be basis for an extension of the completion date.

1.05 APPLICABLE PUBLICATIONS

A. The publications listed below form a part of this specification to the extent referenced.

B. American Society of Testing and materials (ASTM) publications:

1. D 422-63 Particle Size Analysis of Soils
2. D 423-66 Liquid Limit of Soils
3. D 424-59 Plastic Limit and Plasticity Index of Soils
4. D 1557-78 Moisture Density Relations of Soils using a 10 lb. (4.54kg) Rammer and 18-inch (457 mm) Drop
5. D 2167-66 Density of Soil In-Place by the Rubber Balloon Method
6. D 2217-66 Wet preparation of Soil Samples for Particle-Size Analysis and Determination of Soil Contents
7. D 2487-69 Classification of Soils for Engineering Purposes
8. D 2922-81 Test Methods for Density of Soil and Soil-Aggregate In Place by Nuclear Methods (Shallow Depth)
9. E 548-79 Generic Criteria for Use in the Evaluation of Testing and Inspection Agencies

1.06 OPERATION AND MAINTENANCE REQUIREMENTS OF THIS SECTION

A. Not Applicable

PART 2 - MATERIALS

2.01 APPROVED MANUFACTURERS

A. Not applicable

2.02 SATISFACTORY MATERIALS

A. Materials classified as ASTM D2487, Unified Soil Classification System as SW, SP, GW, and GP are satisfactory for backfill use. Materials classified as SP-SM, GP-GM, GM, GC, and ML are also satisfactory for backfill use provided that they contain moisture contents suitable for the intended use and are reasonably free of organic matter. Native material, not considered unsatisfactory as specified below, may comply, except that no material shall have any object with a dimension exceeding 2 inches.

2.03 UNSATISFACTORY MATERIALS

A. Materials classified in ASTM D2487, Unified Soil Classification System as PT, OH, and OL are unsatisfactory. Unsatisfactory materials also include man-made fills, refuse and all materials containing excessive organic matter or having moisture contents which are not suitable for the intended use, or having objects with dimensions exceeding 2 inches (boulders, etc.).

2.04 UNSTABLE MATERIAL

A. Unstable material shall consist of material too wet to properly support the utility pipe, conduit or appurtenance structure.

2.05 GRAVELLY SAND BORROW MATERIAL

A. Gravelly sand borrow material to provide backfill, or replace unsuitable soil, shall meet the requirements of SW, SP, GW, and GP materials, except that the maximum percentage passing the No. 200 sieve shall not exceed 5% based on the soil fraction passing the U.S. No. 4 sieve, and not contain discrete particles greater than 2 inches in diameter.

2.06 DEGREE OF COMPACTION

A. Degree of compaction shall be expressed as a percentage of the maximum density obtained by the test procedure presented in ASTM D1557, Method C. Minimum compaction requirements shall be as specified in PART 3.

2.07 DRAINAGE GRAVEL

A. Shall be 3/4-inch washed gravel with no more than 2% passing 1/2-inch sieve opening

2.08 SPECIAL BEDDING AND INITIAL BACKFILL MATERIAL

A. Minus 3/8-inch washed pea gravel

Unified Soil Classification (USC) System (from ASTM D 2487)				
Major Divisions			**Group Symbol**	**Typical Names**
Course-Grained Soils More than 50% retained on the No. 200 sieve	**Gravels** 50% or more of course fraction retained on the No. 4 sieve	Clean Gravels	GW	Well-graded gravels and gravel-sand mixtures, little or no fines
			GP	Poorly graded gravels and gravel-sand mixtures, little or no fines
		Gravels with Fines	GM	Silty gravels, gravel-sand-silt mixtures
			GC	Clayey gravels, gravel-sand-clay mixtures
	Sands 50% or more of course fraction passes the No. 4 sieve	Clean Sands	SW	Well-graded sands and gravelly sands, little or no fines
			SP	Poorly graded sands and gravelly sands, little or no fines
		Sands with Fines	SM	Silty sands, sand-silt mixtures
			SC	Clayey sands, sand-clay mixtures
Fine-Grained Soils More than 50% passes the No. 200 sieve	**Silts and Clays** Liquid Limit 50% or less		ML	Inorganic silts, very fine sands, rock four, silty or clayey fine sands
			CL	Inorganic clays of low to medium plasticity, gravelly/sandy/silty/lean clays
			OL	Organic silts and organic silty clays of low plasticity
	Silts and Clays Liquid Limit greater than 50%		MH	Inorganic silts, micaceous or diatomaceous fine sands or silts, elastic silts
			CH	Inorganic clays or high plasticity, fat clays
			OH	Organic clays of medium to high plasticity
Highly Organic Soils			PT	Peat, muck, and other highly organic soils

Prefix: G = Gravel, S = Sand, M = Silt, C = Clay, O = Organic Suffix: W = Well Graded, P = Poorly Graded, M = Silty, L = Clay, LL < 50%, H = Clay, LL > 50%

PART 3 - EXECUTION

3.01 EXCAVATION

A. If workers enter any trench or other excavation four or more feet in depth that does not meet the open pit requirements of WSDOT Section 2.09.3(3)B, it shall be shored and cribbed. The Contractor alone shall be responsible for worker safety. All trench safety systems shall meet the requirements of the Washington Industrial Safety and Health Act, Chapter 49.17 RCW.

B. Excavation of every description and of whatever substances encountered shall be performed to allow the installation of all utilities at the lines and grades as required. During excavation, material satisfactory for backfilling shall be stockpiled in an orderly manner at a distance from the banks of the trench sufficient to avoid overloading and to prevent slides or cave-ins. Adequate drainage shall be provided for the stockpiles and surrounding areas by means of ditches, dikes, or other approved methods. The stockpiles shall also be protected from contamination with unsatisfactory excavated material or other material that may destroy the quality and fitness of the suitable stockpiled material.

C. If the Contractor fails to protect the stockpiles and any material becomes unsatisfactory as a result, such material shall be removed and replaced with satisfactory on-site or imported material from approved sources at no additional cost to the Owner.

D. Excavated material not required or not satisfactory for backfill shall be removed from the site and shall be disposed of off site, at the Contractor's expense, at the Contractor's waste area. Any excess satisfactory excavated materials shall not be mixed with unsatisfactory materials. Unsatisfactory materials shall not cover available suitable materials, or be disposed of in such a manner as to interfere with subsequent borrow operations.

E. Grading shall be done as may be necessary to prevent surface water from flowing into the excavation, and any water accumulating therein shall be removed so that the stability of the bottom and sides of the excavation is maintained. Unauthorized over-excavation shall be backfilled in accordance with paragraph 3.05 BACKFILLIING at no additional cost to the Owner.

F. The Contractor shall provide any dewatering needed and is considered incidental to the Contract.

3.02 TRENCH EXCAVATION

A. The trench shall be excavated as recommended by the manufacturer of the pipe to be installed unless shown otherwise on the drawings. Where recommended trench widths are exceeded, redesign shall be performed by the Contractor using stronger pipe or special installation procedures. The cost of this redesign and the increased pipe or installation procedures shall be borne by the Contractor without additional cost to the Owner.

B. Bottom Preparation: The bottoms of trenches shall be accurately graded to provide uniform bearing and support for the bottom quadrant of each section of the pipe and for bedding. Bell holes shall be excavated to the necessary size at each joint or coupling to eliminate point bearing. Stones of 2 inches or greater in any dimension, or as recommended by the pipe manufacturer, whichever is smaller, shall be removed to avoid point bearing.

C. Removal of Unsuitable Material: Where unsuitable material is encountered in the bottom of the trench, such material shall be removed to the depth directed and replaced to the proper grade with select granular material as provided in paragraph 3.05 BACKFILLING. When removal of unsuitable material is required due to the fault or neglect of the Contractor in his performance of the work, the resulting material shall be excavated and replaced by the Contractor without additional cost to the Owner.

D. Bedding: The bedding surface for the pipe shall provide a firm foundation of uniform density throughout the entire length of the pipe. The pipe shall be bedded carefully in a soil foundation accurately shaped and rounded to conform to the lowest one-fourth of the outside portion of circular pipe or to the lower curved portion of pipe arch for the entire length of pipe or arch. When necessary, the bedding shall be taped. Bell holes and depressions for joints shall be only of such length, depth, and width as required for properly making the particular type joint. Provide bedding using pea gravel where noted on the drawings.

3.03 EXCAVATION FOR APPURTENANCES

A. Excavation for manholes, catch basins, inlets, or similar structures below ground shall be sufficient to leave at least 12 inches clear between the outer structure surfaces and the face of the excavation or support members. When concrete or masonry is to be placed in an excavated area, special care shall be taken not to disturb the bottom of the excavation. Excavation to the final grade level shall not be made until just before the concrete or masonry is to be placed.

3.04 JACKING, BORING, AND TUNNELING

A. Unless otherwise indicated, excavation shall be by open cut, except that sections of a trench may be jacked, bored, or tunneled if the pipe, cable or duct can be safely and properly installed and backfill can be properly tamped in such sections.

3.05 BACKFILLING

A. Backfill material shall be compacted to 6" layers and as specified in Paragraph 3.07.

1. Trench Backfill: Trenches shall be backfilled to finish grade. The trench shall be backfilled to above the top of pipe prior to performing the required pressure tests (except that where piping requires insulation, the pipe shall have an initial test prior to insulating and then a final test as specified herein). The joints and couplings shall be left uncovered during the pressure test.

2. Replacement of Unstable Material: Unstable material removed from the bottom of the trench of excavation shall be replaced with select granular material or gravel borrow placed in layers not exceeding 6 inches loose thickness.

3. Bedding and Initial Backfill: Bedding shall consist of satisfactory materials. Initial backfill shall be in 6-inch lift.

3.06 SPECIAL REQUIREMENTS

A. Special requirements for excavation, backfill, and bedding relating to the specific utilities are as follows:

1. Combination Fire/Water Lines: Trenches shall be of a depth to provide a minimum cover of 3.5 feet from the existing ground surface, or from the indicated finished grade, whichever is lower, to the top of the pipe. Bedding shall use "special bedding" materials as specified in paragraph 2.07.

2. Domestic Water Lines: Trenches shall be of a depth to provide a minimum cover of 3.0 feet from the existing ground surface, or from the indicated finished grade, whichever is lower, to the top of the pipe. Except that branch lines serving individual fixtures within building footprint shall have minimum of 1.0-foot cover. Bedding shall use "special bedding" materials as specified in paragraph 2.07.

3. Backflow Preventer Fire Vault: Provide special bedding as specified in this Specification Section.

4. Chilled Water Lines: Provide special bedding as specified in this Specification Section.

5. Where piping passes under footings, provide concrete fill starting 12 inches above pipe for excavated length and width of footing above pipe for footing support. Concrete specification shall match same provided for footing.

3.07 COMPACTION

A. Each layer of fill, or the excavated subgrade, shall be compacted to at least 95%, per ASTM D1557, of laboratory maximum density. Compaction shall be accomplished by approved tamping rollers, pneumatic-tired rollers, three-wheel power rollers, or other approved compaction equipment.

3.08 PROTECTION

A. Newly graded excavated or bedded areas shall be protected from traffic and from erosion, and any settlement or washing away that may occur from any cause, prior to acceptance, shall be repaired and grades reestablished to the required elevations and slopes.

END OF SECTION

SECTION 22 0513

COMMON MOTOR REQUIREMENTS FOR PLUMBING EQUIPMENT

PART 1 - GENERAL

1.01 SECTION INCLUDES

A. General construction and requirements

B. Single phase electric motors

C. Three phase electric motors

D. Electronically Commutated Motors (ECM)

1.02 RELATED REQUIREMENTS

A. Section 26 0583 - Wiring Connections: Electrical characteristics and wiring connections

B. Section 26 2913 - Enclosed Controllers

1.03 REFERENCE STANDARDS

A. IEEE 112 - IEEE Standard Test Procedure for Polyphase Induction Motors and Generators; 2004

B. NEMA MG 1 - Motors and Generators; 2017

C. NFPA 70 - National Electrical Code; Most Recent Edition Adopted by Authority Having Jurisdiction, Including All Applicable Amendments and Supplements

1.04 SUBMITTALS

A. Product Data: Provide wiring diagrams with electrical characteristics and connection requirements.

B. Manufacturer's Installation Instructions: Indicate setting, mechanical connections, lubrication, and wiring instructions.

C. Operation Data: Include instructions for safe operating procedures.

D. Maintenance Data: Include assembly drawings, bearing data including replacement sizes, and lubrication instructions.

1.05 QUALITY ASSURANCE

A. Products Requiring Electrical Connection: Listed and classified by Underwriters Laboratories Inc. as suitable for the purpose specified and indicated.

B. All motors shall be UL listed.

C. Motors shall not be smaller than indicated on drawings; however, motors shall be of adequate size to drive the respective equipment when handling the quantities specified without exceeding the nameplate full load current at any conditions encountered in actual operation. If it becomes evident that a motor furnished is too small to meet these requirements as a result of the Contractor using substituted equipment or having revised the system arrangement, the Contractor shall replace it with a motor of adequate size at no additional cost to the Owner. This Contractor shall also arrange with the Electrical Contractor to increase the size of the wiring, motor starter, and other accessories as required to serve the larger motor at no additional cost to the Owner.

1.06 DELIVERY, STORAGE, AND HANDLING

A. Protect motors stored on site from weather and moisture by maintaining factory covers and suitable weather-proof covering. For extended outdoor storage, remove motors from equipment and store separately.

PART 2 - PRODUCTS

2.01 MANUFACTURERS

A. Baldor Electric Company/ABB Group

B. Leeson Electric Corporation

C. General Electric

D. Westinghouse

E. Reliance

F. Allis-Chalmers

G. Gould

H. Century

I. Wagner

J. US Motors Marathon

K. Regal-Beloit Corporation (Century)

2.02 GENERAL CONSTRUCTION AND REQUIREMENTS

A. Electrical Service: Refer to Section 26 05 83 for required electrical characteristics.

B. Nominal Efficiency:

1. All motors 1 HP and larger shall be energy efficient type and shall meet the 2015 Washington State Energy Code requirements.

C. Construction:

1. Open drip-proof type except where specifically noted otherwise.

2. Motors located outdoors exposed to weather shall have corrosion resistant finish and shall be totally enclosed fan cooled (TEFC) or totally enclosed non-ventilated (TENV) type.

3. Design for continuous operation in 104 degrees F environment.

4. Design for temperature rise in accordance with NEMA MG 1 limits for insulation class, service factor, and motor enclosure type.

D. Visible Nameplate: Indicating motor horsepower, voltage, phase, cycles, RPM, full load amps, locked rotor amps, frame size, manufacturer's name and model number, service factor, and power factor.

E. Wiring Terminations:

1. Provide terminal lugs to match branch circuit conductor quantities, sizes, and materials indicated. Enclose terminal lugs in terminal box sized to NFPA 70, threaded for conduit.

2. For fractional horsepower motors where connection is made directly, provide threaded conduit connection in end frame.

2.03 SINGLE PHASE POWER - SPLIT PHASE MOTORS

A. Starting Torque: Less than 150 percent of full load torque

B. Starting Current: Up to seven times full load current

C. Breakdown Torque: Approximately 200 percent of full load torque

D. Drip-proof Enclosure: Class A (50 degrees C temperature rise) insulation, NEMA Service Factor, prelubricated sleeve or ball bearings

E. Enclosed Motors: Class A (50 degrees C temperature rise) insulation, 1.0 Service Factor, prelubricated ball bearings

2.04 SINGLE PHASE POWER - PERMANENT-SPLIT CAPACITOR MOTORS

A. Starting Torque: Exceeding one fourth of full load torque

B. Starting Current: Up to six times full load current

C. Multiple Speed: Through tapped windings

D. Open Drip-proof or Enclosed Air Over Enclosure: Class A (50 degrees C temperature rise) insulation, minimum 1.0 Service Factor, prelubricated sleeve or ball bearings, automatic reset overload protector

2.05 SINGLE PHASE POWER - CAPACITOR START MOTORS

A. Starting Torque: Three times full load torque

B. Starting Current: Less than five times full load current

C. Pull-up Torque: Up to 350 percent of full load torque

D. Breakdown Torque: Approximately 250 percent of full load torque

E. Motors: Capacitor in series with starting winding; provide capacitor-start/capacitor-run motors with two capacitors in parallel with run capacitor remaining in circuit at operating speeds

F. Drip-proof Enclosure: Class A (50 degrees C temperature rise) insulation, NEMA Service Factor, prelubricated sleeve bearings

G. Enclosed Motors: Class A (50 degrees C temperature rise) insulation, 1.0 Service Factor, prelubricated ball bearings

2.06 THREE PHASE POWER - SQUIRREL CAGE MOTORS

A. Starting Torque: Between 1 and 1-1/2 times full load torque

B. Starting Current: Six times full load current

C. Power Output, Locked Rotor Torque, Breakdown or Pull Out Torque: NEMA Design B characteristics

D. Design, Construction, Testing, and Performance: Conform to NEMA MG 1 for Design B motors

E. Insulation System: NEMA Class B or better

F. Testing Procedure: In accordance with IEEE 112. Load test motors to determine free from electrical or mechanical defects in compliance with performance data.

G. Motor Frames: NEMA Standard T-Frames of steel, aluminum, or cast iron with end brackets of cast iron or aluminum with steel inserts

H. Thermistor System (Motor Frame Sizes 254T and Larger): Three PTC thermistors embedded in motor windings and epoxy encapsulated solid state control relay for wiring into motor starter; refer to Section 26 2913

I. Weatherproof Epoxy Sealed Motors: Epoxy seal windings using vacuum and pressure with rotor and starter surfaces protected with epoxy enamel; bearings double shielded with waterproof non-washing grease

J. Nominal Efficiency: As indicated at full load and rated voltage when tested in accordance with IEEE 112

K. Nominal Power Factor: As indicated at full load and rated voltage when tested in accordance with IEEE 112

2.07 VARIABLE FREQUENCY DRIVES

A. See Section 23 0513 Common Motor Requirements.

2.08 ELECTRONICALLY COMMUTATED MOTORS (ECM)

A. Manufacturers:

1. US Motors, a brand of NIDEC Motor Corporation

B. ECM shall conform to the motor requirements listed above. In addition, the Contractor purchasing the equipment that includes the ECM is responsible for ensuring the ECM motor speed control is set to match the required component operation. The ECM motor speed control may be preset by the equipment manufacturer. The Contractor purchasing the equipment shall provide documentation showing the appropriate ECM motor control board jumper pins, dip switches and/or multi-pin plugs settings for correct HVAC equipment component operation.

PART 3 - EXECUTION

3.01 INSTALLATION

A. Install in accordance with manufacturer's instructions.

B. Install securely on firm foundation. Mount ball bearing motors with shaft in any position.

C. Check line voltage and phase and ensure agreement with nameplate.

END OF SECTION

SECTION 22 0517

SLEEVES AND SLEEVE SEALS FOR PLUMBING PIPING

PART 1 - GENERAL

1.01 SECTION INCLUDES

A. Pipe sleeves

B. Pipe sleeve-seals

1.02 RELATED REQUIREMENTS

A. Section 07 8400 - Firestopping

1.03 REFERENCE STANDARDS

A. ASTM C592 - Standard Specification for Mineral Fiber Blanket Insulation and Blanket-Type Pipe Insulation (Metal-Mesh Covered) (Industrial Type); 2016

B. ASTM E814 - Standard Test Method for Fire Tests of Penetration Firestop Systems; 2013a (Reapproved 2017)

1.04 SUBMITTALS

A. See Section 01 3000 - Administrative Requirements for submittal procedures

B. Seals

1.05 QUALITY ASSURANCE

A. Clean equipment, pipes, valves, and fittings of grease, metal cuttings, and sludge that may have accumulated from the installation and testing of the system.

PART 2 - PRODUCTS

2.01 PIPE SLEEVES

A. Vertical Piping:

1. Sleeve Length: 1 inch above finished floor

2. Provide sealant for watertight joint.

3. Blocked Out Floor Openings: Provide 1-1/2-inch angle set in silicon adhesive around opening.

4. Drilled Penetrations: Provide 1-1/2-inch angle ring or square set in silicone adhesive around penetration.

B. Sheet Metal: Pipe passing through interior walls, partitions, and floors, unless steel or brass sleeves are specified below.

C. Pipe Passing Through Below Grade Exterior Walls:

1. Zinc coated or cast-iron pipe

2. Provide watertight space with link rubber or modular seal between sleeve and pipe on both pipe ends.

D. Pipe Passing Through Concrete Beam Flanges, except where Brass Pipe Sleeves are Specified:

1. Galvanized steel pipe or black iron pipe with asphalt coating.

2. Connect sleeve with floor plate except in mechanical rooms.

E. Pipe Passing Through Mechanical, Laundry, and Kitchen above Basement:

1. Galvanized steel pipe or black iron pipe with asphalt coating.

2. Connect sleeve with floor plate except in mechanical rooms.

F. Penetrations in concrete beam flanges are permitted but are prohibited through ribs or beams without prior approval from the Architect.

G. Clearances:

1. Provide allowance for insulated piping.

2. Wall, Floor, Partitions, and Beam Flanges: 0.5 inch greater than external/pipe diameter.

3. All Rated Openings: Caulked tight with fire stopping material complying with ASTM E814 in accordance with Section 07 8400 to prevent the spread of fire, smoke, and gases.

2.02 PIPE-SLEEVE SEALS

A. Manufacturers:

1. Flexicraft Industries; PipeSeal

2. GPT Thunderline; Link-Seal

B. Modular/Mechanical Seal:

1. Provide watertight seal between pipe and wall/casing opening.

PART 3 - EXECUTION

3.01 PREPARATION

A. Ream pipe and tube ends. Remove burrs. Bevel plain end ferrous pipe.

B. Remove scale and foreign material, from inside and outside, before assembly.

3.02 INSTALLATION

A. Route piping in orderly manner, plumb and parallel to building structure. Maintain gradient.

B. Install piping to conserve building space, to not interfere with use of space and other work.

C. Install piping and pipe sleeves to allow for expansion and contraction without stressing pipe, joints, or connected equipment.

D. Structural Considerations:

E. Provide sleeves when penetrating footings, floors, walls, partitions, and similar elements. Seal pipe including sleeve penetrations to achieve fire resistance equivalent to fire separation required.

1. Underground Piping: Caulk pipe sleeve watertight with mechanically expandable chloroprene inserts with bitumen sealed metal components.

2. Aboveground Piping:

a. Pack solid using mineral fiber complying with ASTM C592.

b. Fill space with an elastomer caulk to a depth of 0.50 inch where penetrations occur between conditioned and unconditioned spaces.

3. All Rated Openings: Caulk tight with fire stopping material conforming to ASTM E814 in accordance with Section 07 8400 to prevent the spread of fire, smoke, and gases.

4. Caulk exterior wall sleeves watertight with mechanically expandable chloroprene inserts with mastic-sealed components.

F. Manufactured Sleeve-Seal Systems:

1. Install manufactured sleeve-seal systems in sleeves located in grade slabs and exterior concrete walls at piping entrances into building.

2. Provide sealing elements of the size, quantity, and type required for the piping and sleeve inner diameter or penetration diameter.

3. Locate piping in center of sleeve or penetration.

4. Install field assembled sleeve-seal system components in annular space between sleeve and piping.

5. Tighten bolting for a water-tight seal.

6. Install in accordance with manufacturer's recommendations.

G. When installing more than one piping system material, ensure system components are compatible and joined to ensure the integrity of the system. Provide necessary joining fittings. Ensure flanges, unions, and couplings for servicing are consistently provided.

H. Insulation shall run continuous through sleeves in non-fire rated elements. Insulation shall not run continuous through sleeves in fire rated elements unless the fire sealant system used is UL accepted for use with insulated pipes.

I. Do not place sleeves around soil, waste, vent, or roof drain lines passing through concrete floors on grade.

END OF SECTION

SECTION 22 0523

GENERAL-DUTY VALVES FOR PLUMBING PIPING

PART 1 - GENERAL

1.01 SECTION INCLUDES

A. Angle valves

B. Ball valves

C. Butterfly valves

D. Check valves

E. Gate valves

F. Globe valves

G. Lubricated plug valves

H. Thermostatic balancing valves

I. Balancing valves

1.02 RELATED REQUIREMENTS

A. Section 20 0000 - General Mechanical Requirements

B. Section 22 0548 - Vibration and Seismic Controls for Plumbing Piping and Equipment

C. Section 22 0553 - Identification for Plumbing Piping and Equipment

D. Section 22 0719 - Plumbing Piping Insulation

E. Section 22 1005 - Plumbing Piping

F. Section 22 1500 - General-Service Compressed-Air Systems

1.03 ABBREVIATIONS AND ACRONYMS

A. CWP: Cold working pressure

B. EPDM: Ethylene propylene copolymer rubber

C. NBR: Acrylonitrile-butadiene, Buna-N, or nitrile rubber

D. NRS: Non-rising stem

E. OS&Y: Outside screw and yoke

F. PTFE: Polytetrafluoroethylene

G. RS: Rising stem

H. TFE: Tetrafluoroethylene

I. WOG: Water, oil, and gas

1.04 REFERENCE STANDARDS

A. ASME B1.20.1 - Pipe Threads, General Purpose (Inch); 2013

B. ASME B16.1 - Gray Iron Pipe Flanges and Flanged Fittings: Classes 25, 125, and 250; 2015

C. ASME B16.5 - Pipe Flanges and Flanged Fittings NPS 1/2 Through NPS 24 Metric/Inch Standard; 2017

D. ASME B16.10 - Face-to-Face and End-to-End Dimensions of Valves; 2017

E. ASME B16.18 - Cast Copper Alloy Solder Joint Pressure Fittings; 2012

F. ASME B16.34 - Valves - Flanged, Threaded and Welding End; 2017

G. ASME B31.9 - Building Services Piping; 2014

H. ASME BPVC-IX - Boiler and Pressure Vessel Code, Section IX - Welding, Brazing, and Fusing Procedures; Welders; Brazers; and Welding, Brazing and Fusing Operators; 2017

I. ASTM A48/A48M - Standard Specification for Gray Iron Castings; 2003 (Reapproved 2016)

J. ASTM A126 - Standard Specification for Gray Iron Castings for Valves, Flanges, and Pipe Fittings; 2004 (Reapproved 2014)

K. ASTM A536 - Standard Specification for Ductile Iron Castings; 1984 (Reapproved 2014)

L. ASTM B61 - Standard Specification for Steam or Valve Bronze Castings; 2015

M. ASTM B62 - Standard Specification for Composition Bronze or Ounce Metal Castings; 2017

N. AWWA C606 - Grooved and Shouldered Joints; 2015

O. MSS SP-45 - Bypass and Drain Connections; 2003 (Reaffirmed 2008)

P. MSS SP-67 - Butterfly Valves; 2017

Q. MSS SP-70 - Cast Iron Gate Valves, Flanged and Threaded Ends; 2011

R. MSS SP-71 - Cast Iron Swing Check Valves, Flanged and Threaded Ends; 2011, with Errata (2013)

S. MSS SP-72 - Ball Valves with Flanged or Butt-Welding Ends for General Service; 2010a

T. MSS SP-78 - Cast Iron Plug Valves, Flanged and Threaded Ends; 2011

U. MSS SP-80 - Bronze Gate, Globe, Angle and Check Valves; 2013

V. MSS SP-85 - Cast Iron Globe & Angle Valves, Flanged and Threaded Ends; 2011

W. MSS SP-110 - Ball Valves Threaded, Socket-Welding, Solder Joint, Grooved and Flared Ends; 2010

X. MSS SP-125 - Gray Iron and Ductile Iron In-Line, Spring-Loaded, Center-Guided Check Valves; 2010

Y. NSF 61 - Drinking Water System Components - Health Effects; 2017

Z. NSF 372 - Drinking Water System Components - Lead Content; 2016

1.05 SUBMITTALS

A. Product Data: Provide data on valves including manufacturer's catalog information. Submit performance ratings, rough-in details, weights, support requirements, and piping connections.

B. Operation and Maintenance Data: Include manufacturer's descriptive literature, operating instructions, maintenance and repair data, and parts listings.

C. Maintenance Materials: Furnish Owner with one wrench for every ten plug valves, in each size of square plug valve head.

1.06 QUALITY ASSURANCE

A. Manufacturer:

1. Obtain valves for each valve type from single manufacturer.

2. Company must specialize in manufacturing products specified in this section, with not less than three years of documented experience.

B. Welding Materials and Procedures: Conform to ASME BPVC-IX.

C. Domestic water fittings, joining materials, and all other appurtenances in contact with potable water shall be lead-free except those specifically exempted in Section 3874 of the Safe Water Drinking Act.

1. Lead-free shall mean:

a. Not containing more than 0.2% lead when used with respect to solder and flux; and

b. Not more than a weighted average of 0.25% when used with respect to the wetted surfaces of pipes, pipe fittings, plumbing fittings, and fixtures

1.07 DELIVERY, STORAGE, AND HANDLING

A. Prepare valves for shipping as follows:

1. Minimize exposure of operable surfaces by setting plug and ball valves to open position.

2. Protect valve parts exposed to piped medium against rust and corrosion.

3. Protect valve piping connections such as grooves, weld ends, threads, and flange faces.

4. Adjust globe, gate, and angle valves to the closed position to avoid clattering.

5. Secure check valves in either the closed position or open position.

6. Adjust butterfly valves to closed or partially closed position.

B. Use the following precautions during storage:

1. Maintain valve end protection and protect flanges and specialties from dirt.

a. Provide temporary inlet and outlet caps.

b. Maintain caps in place until installation.

2. Store valves in shipping containers and maintain in place until installation.

a. Store valves indoors in dry environment.

b. Store valves off the ground in watertight enclosures when indoor storage is not an option.

C. Exercise the following precautions for handling:

1. Handle large valves with sling, modified to avoid damage to exposed parts.

2. Avoid the use of operating handles or stems as rigging or lifting points.

PART 2 - PRODUCTS

2.01 APPLICATIONS

A. See drawings for specific valve locations.

B. Listed pipe sizes shown using nominal pipe sizes (NPS) and nominal diameter (DN).

C. Provide the following valves for the applications if not indicated on drawings:

1. Shutoff: Ball, butterfly, gate

2. Dead-End: Single-flange butterfly (lug) type

3. Throttling: globe or butterfly

4. Swing Check (Pump Outlet):

a. 2 NPS and Smaller: Bronze swing check valves with bronze or nonmetallic disc

b. 2-1/2 NPS and Larger for Domestic Water: Iron swing check valves with closure control, metal or resilient seat check valves

D. Substitutions of valves with higher CWP classes or WSP ratings for same valve types are permitted when specified CWP ratings or WSP classes are not available.

E. Required Valve End Connections for Non-Wafer Types:

1. Steel Pipe:

a. 2 inch and Smaller: Threaded ends

b. 2-1/2 inch to 4 inch: Grooved or flanged ends except where threaded valve-end option is indicated in valve schedules below

c. 5 inch and Larger: Grooved or flanged ends

d. Grooved-End Copper Tubing and Steel Piping: Grooved

2. Copper Tube:

a. 2 inch and Smaller: Threaded ends except where solder-joint valve-end option is indicated in valve schedules below

b. 2-1/2 inch to 4 inch: Grooved or flanged ends except where threaded valve-end option is indicated in valve schedules below

c. 5 inch and Larger: Grooved or flanged ends

F. Low Pressure, Compressed Air Valves 150 psig or Less:

1. 2 NPS and Smaller:

a. Ball: One-piece, full port, bronze with bronze trim

b. Bronze Lift Check: Class 125, bronze disc

c. Bronze Swing Check: Class 125, bronze disc

d. Bronze Gate: Class 125, NRS

2. 2-1/2 NPS and Larger:

a. Iron, 2-1/2 NPS to 4 NPS: Provide with threaded or press ends.

b. Iron Single-Flange Butterfly: 200 CWP, NBR Seat, aluminum-bronze disc

c. Iron Grooved-End Butterfly: 175 CWP

d. Iron Swing Check: Class 125, metal seats

e. Iron Grooved-End Swing Check: 300 CWP

f. Iron Center-Guided Check: Class 125, compact-wafer, metal seat

g. Iron Plate-Type Check: Class 125; single plate; metal seat

h. Iron Gate: Class 125, NRS

G. Domestic, Hot and Cold Water Valves:

1. 2 NPS and Smaller:

a. Ball: One piece, full port, bronze with bronze trim

b. Bronze Swing Check: Class 125, bronze disc

c. Bronze Gate: Class 125, NRS

d. Bronze Globe: Class 125, bronze disc

2. 2-1/2 NPS and Larger:

a. Iron, 2-1/2 NPS to 4 NPS: Provide with threaded or flanged ends

b. Iron Ball: Class 150

c. Iron Single-Flange Butterfly: 200 CWP, EPDM seat, aluminum-bronze disc

d. Iron Grooved-End Butterfly: 175 CWP

e. Iron Swing Check: Class 125, metal seats

f. Iron Swing Check with Closure Control: Class 125, lever and spring

g. Iron Grooved-End Swing Check: 300 CWP

h. Iron Center-Guided Check: Class 125, compact-wafer, metal seat

i. Iron Plate-Type Check: Class 125; single plate; metal seat

j. Iron Gate: Class 125, NRS

k. Iron Globe: Class 125

2.02 GENERAL REQUIREMENTS

A. Valve Pressure and Temperature Ratings: No less than rating indicated; as required for system pressures and temperatures.

B. Valve Sizes: Match upstream piping unless otherwise indicated.

C. Valve Actuator Types:

1. Handwheel: Valves other than quarter-turn types

2. Hand Lever: Quarter-turn valves 6 NPS and smaller

3. Wrench: Plug valves with square heads

D. Valves in Insulated Piping: With 2 NPS stem extensions and the following features:

1. Gate Valves: Rising stem

2. Ball Valves: Extended operating handle of non-thermal-conductive material, and protective sleeve that allows operation of valve without breaking the vapor seal or disturbing insulation.

3. Butterfly Valves: Extended neck

4. Memory Stops: Fully adjustable after insulation is installed

E. Valve-End Connections:

1. Threaded End Valves: ASME B1.20.1

2. Flanges on Iron Valves: ASME B16.1 for flanges on iron valves

3. Pipe Flanges and Flanged Fittings 1/2 inch through 24 inches: ASME B16.5

4. Solder Joint Connections: ASME B16.18

5. Grooved End Connections: AWWA C606

F. General ASME Compliance:

1. Ferrous Valve Dimensions and Design Criteria: ASME B16.10 and ASME B16.34

2. Solder-joint Connections: ASME B16.18

3. Building Services Piping Valves: ASME B31.9

G. Valve Materials for Potable Water: NSF 61 and NSF 372

H. Bronze Valves:

I. Valve Bypass and Drain Connections: MSS SP-45

J. Source Limitations: Obtain each valve type from a single manufacturer.

2.03 BRONZE, ANGLE VALVES

A. Class 125: CWP Rating: 200 psig:

1. Comply with MSS SP-80, Type 1

2. Body: Bronze; ASTM B62, with integral seat and screw in bonnet

3. End Connections: Pipe thread

4. Stem: Bronze

5. Disc: Bronze

6. Packing: Asbestos free

7. Handwheel: Bronze or aluminum

8. Manufacturers:

a. Nibco

b. Stockham

c. Apollo

d. McGuire

e. Chicago Faucets

2.04 BRONZE, BALL VALVES

A. General:

1. Fabricate from dezincification resistant material.

2. Copper alloys containing more than 15 percent zinc are not permitted.

B. One Piece, Reduced Port with Bronze Trim:

1. Comply with MSS SP-110

2. WSP Rating: 400 psi

3. CWP Rating: 600 psi

4. Body: Bronze

5. End Connections: Pipe press

6. Seats: PTFE

C. Two Piece, Full Port with Stainless Steel Trim:

1. Comply with MSS SP-110

2. WSP Rating: 150 psi

3. WOG Rating: 600 psi

4. Body: Forged bronze or dezincified-brass alloy

5. Ends Connections: Pipe thread or solder

6. Seats: PTFE or TFE

7. Stem: Bronze, blowout proof

8. Ball: Stainless steel, vented

9. Manufacturers:

a. Nibco

b. Stockham

c. Apollo

d. Jomar

D. Three Piece, Full Port with Stainless Steel Trim:

1. Comply with MSS SP-110

2. WSP Rating: 150 psi

3. CWP Rating: 600 psi

4. Body: Bronze

5. End Connections: Pipe thread or press

6. Seats: PTFE or TFE

7. Stem: Stainless steel

8. Ball: Stainless steel, vented

9. Manufacturers:

a. Nibco

b. Stockham

c. Apollo

d. Jomar

2.05 STAINLESS STEEL, BALL VALVES

A. Two Piece, Full Port with Stainless Steel Trim:

1. Comply with MSS SP-110

2. WSP Rating: 150 psi

3. CWP Rating: 2,000 psi

4. Seats: PFTE

5. Stem: Stainless steel, blowout proof

6. Ball: Stainless steel, vented

7. Manufacturers:

a. Nibco

b. Stockham

c. Apollo

B. Three Piece, Full Port with Stainless Steel Trim:

1. Comply with MSS SP-110

2. WSP Rating: 150 psi

3. WOG Rating: 2,000 psi

4. Seats: PFTE

5. Stem: Stainless steel, blowout proof

6. Ball: Stainless steel, vented

7. Bolts: Stainless steel

8. Manufacturers:

a. Nibco

b. Stockham

c. Apollo

2.06 IRON, BALL VALVES

A. Class 125, Full Port, Stainless Steel Trim:

1. Comply with MSS SP-72

2. CWP Rating: 200 psi

3. Body: ASTM A536, Grade 65-45-12, ductile iron

4. End Connections: Flanged

5. Seats: PTFE or TFE

6. Stem: Stainless steel

7. Ball: Stainless steel

8. Operator: Lever with locking handle

9. Manufacturers:

a. Nibco

b. Stockham

c. Apollo

2.07 IRON, SINGLE FLANGE BUTTERFLY VALVES

A. Lug type: Bi-directional dead-end service without use of downstream flange

1. Comply with MSS SP-67, Type I

2. Body Material: ASTM A126, cast iron or ASTM A536, ductile iron

3. Stem: One or two-piece stainless steel

4. Seat: EPDM

5. Disc: Stainless steel

6. Manufacturers:

a. Nibco

b. Stockham

c. Apollo

2.08 IRON, GROOVED-END BUTTERFLY VALVES

A. CWP Rating: 175 psig (1200 kPa)

1. Comply with MSS SP-67, Type I

2. Body: Coated ductile iron

3. Stem: Two-piece stainless steel

4. Disc: Coated ductile iron

5. Disc Seal: EPDM

6. Manufacturers:

a. Nibco

b. Stockholm

c. Apollo

2.09 BRONZE, LIFT CHECK VALVES

A. General:

1. Fabricate from dezincification resistant material.

2. Copper alloys containing more than 15 percent zinc are not permitted.

B. Class 125:

1. Comply with MSS SP-80, Type 1, Metal Disc to Metal Seat and Type 2, Nonmetallic Disc to Metal Seat.

2. CWP Rating: 200 psi

3. Design: Vertical flow

4. Body: Comply with ASTM B61 or ASTM B62, bronze

5. End Connections: Threaded

6. Disc (Type 1): Bronze

7. Manufacturers:

a. Nibco

b. Stockham

c. Apollo

2.10 BRONZE, SWING CHECK VALVES

A. General:

1. Fabricate from dezincification resistant material.

2. Copper alloys containing more than 15 percent zinc are not permitted.

B. Class 125: CWP Rating: 200 psig (1380 kPa).

1. Pressure and Temperature Rating: MSS SP-80, Type 3

2. Design: Y-pattern, horizontal or vertical flow

3. Body: Bronze, ASTM B62

4. End Connections: Threaded

5. Disc: Bronze

6. Manufacturers:

a. Nibco

b. Stockham

c. Apollo

2.11 IRON, HORIZONTAL SWING CHECK VALVES

A. Class 125:

1. Pressure and Temperature Rating: MSS SP-71, Type I

2. WOG Rating: 200 psi

3. Body: ASTM A126, gray cast iron with bolted bonnet

4. End Connections: Flanged

5. Trim: Composition

6. Seat Ring and Disc Holder: Bronze

7. Disc: PTFE or TFE

8. Gasket: Asbestos free

9. Manufacturers:

a. Nibco

b. Stockham

c. Apollo

2.12 IRON, SWING CHECK VALVES WITH CLOSURE CONTROL

A. Class 125 with Lever and Spring-Closure Control:

1. Comply with MSS SP-71, Type I

2. Description:

a. CWP Rating: 200 psi

b. Design: Clear or full waterway

c. Body: ASTM A126, gray iron with bolted bonnet

d. Ends: Flanged as indicated

e. Trim: Bronze

f. Gasket: Asbestos free

g. Closer Control: Factory installed, exterior lever, and weight

3. Manufacturers:

a. Nibco

b. Stockham

c. Apollo

2.13 IRON, GROOVED-END SWING CHECK VALVES

A. 300 CWP:

1. CWP Rating: 300 psi

2. Body: ASTM A536, Grade 65-45-12 ductile iron

3. Seal: EPDM

4. Disc: Ductile iron

5. Coating: Black, non-lead paint

6. Manufacturers:

a. Nibco

b. Stockham

c. Apollo

2.14 IRON, CENTER-GUIDED CHECK VALVES

A. Class 125, Compact-Wafer:

1. Comply with MSS SP-125

2. CWP Rating: 200 psi

3. Body: 316 stainless steel

4. Metal Seat: Stainless steel

5. Manufacturers:

a. Nibco

b. Stockham

c. Apollo

d. Wheatly

e. Hammond

2.15 BRONZE, GATE VALVES

A. General:

1. Fabricate from dezincification resistant material.

2. Copper alloys containing more than 15 percent zinc are not permitted.

B. Non-Rising Stem (NRS):

1. Class 125: CWP Rating: 200 psig

2. Ends: Threaded or solder joint

3. Manufacturers:

a. Nibco

b. Stockham

c. Apollo

2.16 IRON, GATE VALVES

A. NRS:

1. Pressure and Temperature Rating: MSS SP-70, Type I

2. Class 125: CWP Rating: 200 psig

3. Body: ASTM A126, gray iron with bolted bonnet

4. End Connections: Flanged

5. Trim: Bronze

6. Disc: Solid wedge

7. Packing and Gasket: Asbestos free.

8. Manufacturers:

   a. Nibco

   b. Stockham

   c. Apollo

2.17 BRONZE, GLOBE VALVES

A. General:

1. Fabricate from dezincification resistant material.

2. Copper alloys containing more than 15 percent zinc are not permitted.

B. Class 125: CWP Rating: 200 psig:

1. Disc: PTFE.

2. Manufacturers:

   a. Nibco

   b. Stockham

   c. Apollo

2.18 IRON, GLOBE VALVES

A. Class 125: CWP Rating: 200 psig:

1. Comply with MSS SP-85, Type I

2. Body: Gray iron; ASTM A126, with bolted bonnet

3. Connection Ends: Flanged.

4. Trim: Bronz

5. Packing and Gasket: Asbestos free, adjustable

6. Operator: Handwheel or chainwheel

7. Manufacturers:

a. Nibco

b. Stockham

c. Apollo

2.19 LUBRICATED PLUG VALVES

A. Regular Gland and Cylindrical with Flanged Ends:

1. Comply with MSS SP-78, Type II

2. Class 125: CWP Rating: 200 psi

3. Body: ASTM A48/A48M or ASTM A126, cast iron with lubrication sealing system

4. Pattern: Regular or short

5. Plug: Cast iron or bronze with sealant groove.

6. Manufacturers:

a. Nibco

b. Stockham

c. Apollo

2.20 THERMOSTATIC BALANCING VALVES

A. Furnish and install as indicated on the plans, an automatic balancing valve in the domestic hot water piping. Balancing valve shall be self-contained and fully automatic without additional piping or control mechanisms.

1. Balancing Valve shall regulate the flow of recirculated domestic hot water based on water temperature entering valve, regardless of system operating pressure.

a. When fully closed, balancing valve shall bypass a minimum flow to maintain dynamic control of the recirculating loop, and provide a means for system sanitizing.

b. Balancing valve shall be factory set to 110°F.

1) Balancing valve shall modulate between open and closed position within a 10°F range.

c. Balancing valve shall be available in sizes ranging from ½” NPT to 2” NPT to match pipe size on plans.

B. Balancing valve body and all internal components shall be constructed of stainless steel with major components constructed of stainless steel or EPDM.

1. Balancing valve sizes ½” through 2” shall be rated to 200 PSIG maximum working pressure.

a. All balancing valves shall be standard tapered female pipe thread, NPT.

2. All balancing valves shall be rated to 300°F maximum working temperature.

3. Balancing valves shall be ANSI/AWWA C800 compliant.

4. Thermal actuator shall be spring operated and self-cleaning, delivering closing thrust sufficient to keep orifice opening free of scale deposits.

a. Thermal actuator shall be rated for a minimum of 200,000 cycles.

C. Provide valve with a union and isolation ball valves.

D. Manufacturers:

1. Circuit Solver model CSUA by ThermOmegaTech

2. Acorn

3. Bell and Gossett

2.21 BALANCING VALVES

A. Each valve shall have two ¼” NPT brass metering ports with Nordel check valves and gasketed caps located on both sides of valve seat. Two additional ¼” NPT connections with brass plugs are to be provided on the opposite side of the metering ports for use as drain connections. Drain connections and metering ports are to be interchangeable to allow for measurement flexibility when valves are installed in tight locations.

B. Valves are to be of the “Y” pattern, modified, equal percentage globe style, and provide three functions:

1. Precise flow measurement

2. Precision flow balancing

3. Positive drip tight shut off

C. Valves shall provide multi-turn, 360° adjustable with a micrometer type indicator located on valve handwheel. Valve handwheel shall have a memory feature, which will provide a means for locking the valve position after the system is balanced. 90° turn adjustable valves are not acceptable.

D. Valve Sizes ½" - 2": Valve body shall be bronze with ultra-high strength engineered resin or stainless-steel plug. The plug shall have precision-contoured channels to distribute flow uniformly across valve seat. Low-lead brass stem and high strength resin handwheel and sleeve. Valves shall have a minimum of four full 360° handwheel turns.

E. Single Turn Mini Sweat Size (1/2" to 3/4"):

1. Valve shall be globe style design with bronze body, solder end connection, bronze trim with EPDM plug, high strength resin handwheel with valve position locking inserts, and two ¼" NPT brass metering ports with Nordel check valves and gasketed caps located on both sides of the valve seat.

2. Valve shall provide three functions:

a. Precision flow measurement

b. Precision flow balancing

c. Positive drip tight shut-off

3. Valve shall provide 360° single turn adjustment range with indicating scale on valve handwheel.

4. The valve shall be installed with flow in the direction of the arrow on the valve body and installed at least five pipe diameters downstream from any fitting, and at least ten pipe diameters downstream from any pump, with two pipe diameters downstream from the valve free of any fittings. When installed, easy unobstructed access to the valve handwheel and metering ports for adjustment and measurements shall be provided. Mounting of valve in piping must prevent sediment build-up in metering ports.

F. Insulation (1/2" to 2"):

1. Each valve shall be furnished with a pre-formed removable PVC insulation jacket to meet ASTM D 1784/class 14253-C, MEA#7-87, ASTM-E-84 and ASTM-136 with a flame spread rating of 50 or less. There will be provided sufficient mineral fiberglass insulation to meet ASHRAE 90.1-1989 specifications in operating conditions with maximum Fluid Design Operating Temperature Range of 141-200°F and Mean Rating Temperature of 125°F.

G. Manufacturers:

1. Red-White Valve

PART 3 - EXECUTION

3.01 EXAMINATION

A. Discard all packing materials and verify that valve interior, including threads and flanges is completely clean without signs of damage or degradation that could result in leakage.

B. Verify valve parts to be fully operational in all positions from closed to fully open.

C. Confirm gasket material to be suitable for the service, to be of correct size, and without defects that could compromise effectiveness.

D. Should valve be determined to be defective, replace with new valve.

3.02 INSTALLATION

A. Provide unions or flanges with valves to facilitate equipment removal and maintenance while maintaining system operation and full accessibility for servicing.

B. Provide separate valve support as required and locate valve with stem at or above center of piping, maintaining unimpeded stem movement.

C. Install check valves where necessary to maintain direction of flow as follows:

1. Lift Check: Install with stem plumb and vertical.

2. Swing Check: Install horizontal maintaining hinge pin level.

3. Orient plate-type and center-guided into horizontal or vertical position, between flanges.

3.03 INSTALLATION OF THERMOSTATIC BALANCING VALVES

A. Install Thermostatic Balancing Valves in each domestic hot water return piping branch beyond last hot water device on that branch.

END OF SECTION

SECTION 22 0548

VIBRATION AND SEISMIC CONTROLS FOR PLUMBING PIPING AND EQUIPMENT

PART 1 - GENERAL

1.01 GENERAL REQUIREMENTS

A. Seismic Restraints shall be bidder-designed. Seismic Design Criteria are to be established per the International Building Code and ASCE along with Project Structural drawings.

B. Items not included in this specification shall not relieve the contractor of the responsibility of providing seismic bracing that meets all the criteria required by the referenced codes and in accordance with the seismic design guidelines and the project structural drawings.

1.02 SECTION INCLUDES

A. Vibration-isolated equipment support bases

B. Vibration isolators

C. External seismic snubber assemblies

D. Seismic restraint systems

E. Vibration-isolated and/or seismically engineered roof curbs

1.03 RELATED REQUIREMENTS

A. Section 03 3000 - Cast-in-Place Concrete

1.04 REFERENCE STANDARDS

A. ASCE 7 - Minimum Design Loads and Associated Criteria for Buildings and Other Structures; 2016

B. ASCE 19 - Structural Applications of Steel Cables for Buildings; 2016

C. MFMA-4 - Metal Framing Standards Publication; 2004

D. ICC (IBC) - International Building Code; 2018

E. SMACNA (SRM) - Seismic Restraint Manual Guidelines for Mechanical Systems; 2008

F. Applicable Project Structural Drawings for Seismic Design Criteria

G. Applicable Manufacturer's Seismic Design Guides for Proprietary listed seismic braces and mounting hardware

1.05 SEISMIC DESIGN CRITERIA

A. Occupancy Category of Structure (I-IV) per ICC (IBC) or ASCE 7

B. Component Importance Factor (Ip) per ASCE 7

C. Mapped Acceleration Parameters (S1 and (Ss) per ICC (IBC) and Project Structural Drawings

D. Site Class (A - F) per ICC (IBC) and Project Structural Drawings

E. Site Coefficient (Fa) per ICC (IBC) and Project Structural Drawings

F. Site Coefficient (Fv) per ICC (IBC) and Project Structural Drawings

G. Seismic Design Category (A - D) based on Short Period Response Accelerations per ICC (IBC) and Project Structural Drawings

H. Seismic Design Category (A - D) based on 1-Second Period Response Acceleration per ICC (IBC) and Project Structural Drawings

I. Amplification Factor ap per ASCE 7

J. Response Modification Factor Rp per ASCE 7

1.06 SUBMITTALS

A. Shop Drawings:

1. Include the seal of the Professional Engineer registered in the State of Washington in which the Project is located, on drawings and calculations which at a minimum include the following:

B. Periodic Special Inspections: The mechanical contractor shall provide a list of components/systems requiring periodic special inspections per ICC (IBC).

C. Special Certification Requirements: Each contractor responsible for the construction of a “Designated Seismic System” for active plumbing equipment that must remain operable following the design earthquake, or components with hazardous contents certified by the manufacturer to maintain containment following the design earthquake, shall submit a Manufacturer’s Certificate of Compliance for review and approval by the Registered Design Professional responsible for the design of the system. This information shall then be submitted to the AHJ.

1.07 QUALITY ASSURANCE

A. Comply with applicable building code.

PART 2 - PRODUCTS

2.01 MANUFACTURERS

A. Kinetics Noise Control, Inc

B. Mason Industries

C. Vibration Eliminator Company, Inc

2.02 PERFORMANCE REQUIREMENTS

A. General:

1. All vibration isolators, base frames, and inertia bases to conform to all uniform deflection and stability requirements under all operating loads.

2.03 VIBRATION-ISOLATED EQUIPMENT SUPPORT BASES

2.04 VIBRATION ISOLATORS

A. General Requirements:

1. Resilient Materials for Vibration Isolators: Oil, ozone, and oxidant resistant.

2.05 EXTERNAL SEISMIC SNUBBER ASSEMBLIES

A. Description: Steel snubbing assemblies designed for external attachment to both equipment and supporting structure that, as part of a complete system, restrain equipment motion in all directions during a seismic event while maintaining vibration isolation during normal operation.

B. Seismic Snubbing Elements:

1. Air Gap: Between 0.125 inches and 0.25 inches unless otherwise indicated.

2. Points of Contact: Cushioned with resilient material, minimum 0.25 inch thick; capable of being visually inspected for damage and replaced.

C. Lateral External:

1. Performance: Equipment movement at each snubber location limited to a maximum of 0.25 inches in any direction without significantly degrading the vibration isolation capability of the isolator during normal operating conditions.

D. Omni Directional External:

1. Performance: Equipment movement at each snubber location limited to a maximum of 0.25 inches in any direction without significantly degrading the vibration isolation capability of the isolator during normal operating conditions.

E. Horizontal Single Axis External:

1. Performance: Equipment movement at each snubber location limited to a maximum of 0.25 inches in any direction without significantly degrading the vibration isolation capability of the isolator during normal operating conditions.

2.06 SEISMIC RESTRAINT SYSTEMS

A. Description: System components and accessories specifically designed for field assembly and attachment of seismic restraints.

B. Cable Restraints:

1. Comply with ASCE 19

2. Cables: Pre-stretched, galvanized steel wire rope with certified break strength

3. Cable Connections: Use only swaged end fittings. Cable clips and wedge type end fittings are not permitted in accordance with ASCE 19

4. Use protective thimbles for cable loops where potential for cable damage exists.

C. Rigid Restraints: Use MFMA-4 steel channel (strut), steel angle, or steel pipe for structural element; suitable for both compressive and tensile design loads.

D. Cable Restraints:

1. Connections:

a. Use overlapping wire rope U clips, cable clamping bolts, swaged sleeves, or seismically rated tool-less wedge insert lock connectors.

2.07 VIBRATION-ISOLATED AND/OR SEISMICALLY ENGINEERED ROOF CURBS

A. Vibration Isolation Curbs:

1. Non-Seismic Curb Rail:

   a. Location: Between existing roof curb and rooftop equipment

   b. Construction: Aluminum

   c. Integral vibration isolation to comply with requirements of this section

   d. Weather exposed components consist of corrosion resistant materials

2. Non-Seismic Curb:

   a. Location: Between structure and rooftop equipment

   b. Construction: Aluminum

   c. Integral vibration isolation to comply with requirements of this section

   d. Weather exposed components consist of corrosion resistant materials

3. Seismic Curb:

   a. Location: Between structure and rooftop equipment

   b. Construction: Steel

   c. Integral vibration isolation to comply with requirements of this section

   d. Snubbers consist of minimum 0.25-inch-thick resilient pads to avoid metal-to-metal contact without compromising vibration isolating capabilities

   e. Weather exposed components consist of corrosion resistant materials

B. Seismic Type Non-Isolated Curb and Fabricated Equipment Piers:

1. Location: Between structure and rooftop equipment

2. Construction: Steel

3. Weather exposed components consist of corrosion resistant materials

PART 3 - EXECUTION

3.01 INSTALLATION - SEISMIC

A. Seismic Snubbers:

1. Provide on all isolated equipment and piping.

B. Floor and Base-Mounted Equipment, Vibration Isolated Equipment and associated Vibration and Seismic Controls for Connections:

1. Provide isolators and restraints designed for amplified code forces per ASCE 7 and with demonstrated ability to resist required forces including gravity, operational, and seismic forces.

2. Where timber/wood floor or other substrate is inadequate for installation of lag bolts, screws, or other mechanical fasteners, install supplemental framing or blocking to transfer loads to structural elements.

C. Wall Mounted Mechanical Equipment:

1. Anchoring to gypsum wallboard, plaster, or other wall finish that has not been engineered to resist imposed loads is not permitted.

D. Piping:

1. Pipes and Connections Constructed of Ductile Materials (copper; ductile iron, steel or aluminum; and brazed, welded or screwed connections) and is 2.5 inches and larger and all fuel piping 1 inch and larger:

a. Provide transverse bracing at spacing not more than 40.0 feet on center.

b. For fuel liquid and gas piping, provide transverse bracing at spacing not more than 20.0 feet (6.1 m) on center.

c. For fuel liquid and gas piping, provide longitudinal bracing at spacing not more than 40.0 feet (12.2 m) on center.

d. Transverse bracing for one pipe section may also act as a longitudinal bracing for a pipe section connected perpendicular to it, if the bracing is installed within 2 feet of the elbow or tee of similar size.

e. Piping conveying fluids at 100°F. and higher shall have expansion devices provided in between longitudinal braces to allow for thermal expansion.

f. Bracing may be omitted when the top of the pipe is suspended 12 inches or less from the supporting structural member and the pipe is suspended by an individual hanger.

2. Pipes and Connections Constructed of Non-Ductile Materials (cast iron, no-hub, plastic or non-UL listed grooved coupling pipe) and is 2.5 inches and larger:

a. Transverse bracing for one pipe section may also act as a longitudinal bracing for a pipe section connected perpendicular to it, if the bracing is installed within 2 feet of the elbow or tee of similar size.

b. Piping conveying fluids at 100°F. and higher shall have expansion devices provided in between longitudinal braces to allow for thermal expansion.

c. Bracing may be omitted when the top of the pipe is suspended 12 inches or less from the supporting structural member and the pipe is suspended by an individual hanger.

3. For equipment 400 lbs. or greater, provide lateral force calculations per ICC (IBC) if required by the building official.

4. Provide earthquake bumpers for all equipment that is supported on isolators and weighing over 300 lbs. including base. Provide minimum of four bumpers for equipment weighing less than 2,000 lbs., and eight bumpers for heavier equipment.

E. Tanks:

1. Provide seismic bracing for hot water tanks.

END OF SECTION

SECTION 22 0553

IDENTIFICATION FOR PLUMBING PIPING AND EQUIPMENT

PART 1 - GENERAL

1.01 SECTION INCLUDES

A. Nameplates

B. Tags

C. Stencils

D. Pipe markers

1.02 RELATED REQUIREMENTS

A. Section 09 9123 - Interior Painting: Identification painting

1.03 REFERENCE STANDARDS

A. ASME A13.1 - Scheme for the Identification of Piping Systems; 2015

1.04 SUBMITTALS

A. See Section 01 3000 - Administrative Requirements for submittal procedures

B. List: Submit list of wording, symbols, letter size, and color coding for mechanical identification.

C. Operation and Maintenance Data:

1. Valve Diagram: Provide an unlaminated copy of the valve diagram.

2. Valve Tag Schedule: Provide an unlaminated copy of the valve tag schedule.

3. Concealed Items Legend: Provide a color legend listing the colors used to label equipment above the ceiling.

D. Project Record Documents: Record actual locations of tagged valves.

PART 2 - PRODUCTS

2.01 NAMEPLATES

A. Manufacturers:

1. Brimar Industries, Inc

2. Kolbi Pipe Marker Co

3. Seton Identification Products

B. Description: Laminated three-layer plastic with engraved letters

1. Letter Color: White

2. Letter Height: 1/4 inch

3. Background Color: Black

4. Plastic: Conform to ASTM D709

2.02 TAGS

A. Manufacturers:

1. Advanced Graphic Engraving

2. Brady Corporation

3. Brimar Industries, Inc

4. Kolbi Pipe Marker Co

5. Seton Identification Products

B. Plastic Tags: Laminated three-layer plastic with engraved black letters on light contrasting background color. Tag size minimum 1-1/2-inch diameter.

C. Metal Tags: Brass with stamped letters; tag size minimum 1-1/2-inch diameter with smooth edges.

D. Valve Tag Chart: Typewritten letter size list hard laminated.

2.03 STENCILS

A. Manufacturers:

1. Brady Corporation

2. Kolbi Pipe Marker Co

3. Seton Identification Products

B. Stencils: With clean cut symbols and letters of following size:

C. Stencil Paint: As specified in Section 09 91 23, semi-gloss enamel, colors conforming to ASME A13.1.

2.04 PIPE MARKERS

A. Manufacturers:

1. Brady Corporation

2. Brimar Industries, Inc

3. Kolbi Pipe Marker Co

4. Seton Identification Products

B. Comply with ASME A13.1.

C. Plastic Pipe Markers: Factory fabricated, flexible, semi- rigid plastic, preformed to fit around pipe or pipe covering; minimum information indicating flow direction arrow and identification of fluid being conveyed.

D. Plastic Tape Pipe Markers: Flexible, vinyl film tape with pressure sensitive adhesive backing and printed markings.

E. Underground Plastic Pipe Markers: Bright colored continuously printed plastic ribbon tape, minimum 6 inches wide by 4 mil thick, manufactured for direct burial service.

F. Identification Scheme, ASME A13.1:

1. Primary: External Pipe Diameter, Uninsulated or Insulated

2. Secondary: Color scheme per fluid service

a. Water; Potable, Cooling, Boiler Feed, and Other: White text on green background

G. Color code assignments shall be verified with the Owner prior to ordering. Color code as follows:

1. Potable Domestic Cold, Hot, and Hot Recirculation Water: Green with white letters

2. Fire Quenching Fluids: Red with white letters

3. Non-Potable Cold, Hot, and Hot Recirculation Water: Orange with black letters with added words stating "CAUTION: NON-POTABLE, DO NOT DRINK"

4. Flammable Fluids: Yellow with black letters

5. Compressed Air: Blue with white letters

2.05 VALVE TAG SCHEDULES

A. Provide a Valve Tag Schedule for each piping system, typewritten, and reproduced on 8-1/2" x 11" bond paper, hard laminated. Tabulate valve number, piping system, system abbreviation (as shown on tag), location of valve (room or space), and variations for identification (if any). Mark valves which are intended for emergency shut-off and similar special uses, by special "flags", in margin of schedule.

2.06 VALVE DIAGRAM

A. Provide a Valve Diagram showing the location of all valves relative to the floor plan of the building. Each Valve Diagram shall be 11x17, hard laminated sheets. Each piping system shall be in a unique color and a legend noting the system colors shall be placed on the first page.

PART 3 - EXECUTION

3.01 PREPARATION

A. Degrease and clean surfaces to receive identification products.

3.02 INSTALLATION

A. Install flexible nameplates with corrosive-resistant mechanical fasteners, or adhesive. Apply with sufficient adhesive to ensure permanent adhesion and seal with clear lacquer.

B. Install tags in clear view and align with axis of piping.

C. Install plastic pipe markers in accordance with manufacturer's instructions.

D. Install plastic tape pipe marker around pipe in accordance with manufacturer's instructions.

E. Install underground plastic pipe markers 6 to 8 inches below finished grade, directly above buried pipe.

F. Locate ceiling tacks to locate valves or dampers above lay-in panel ceilings. Locate in corner of panel closest to equipment.

3.03 PIPE MARKERS AND COLOR BANDS

A. Locate pipe markers and color bands as follows wherever piping is exposed to view in occupied space, machine rooms, accessible maintenance spaces and exterior non-concealed locations or in accessible ceiling spaces.

1. Near each valve and control device

2. Near each branch, excluding short take-offs for fixtures and terminal units; mark each pipe at branch where there could be question of flow pattern

3. Near locations where pipes pass through walls or floor/ceilings, or enter non-accessible enclosures

4. At access doors, manholes, and similar access points which permit view of concealed piping

5. Near major equipment items and other points of origination and termination

3.04 PLUMBING EQUIPMENT IDENTIFICATION

A. Install engraved plastic laminate sign on or near each major item of plumbing equipment and each operation device. Provide signs for the following general categories of equipment and operational devices. Provide signs or suspended ceiling tile below mechanical equipment located above ceiling.

1. Pumps and similar motor-driven units

2. Tanks and pressure vessels

3.05 NON-POTABLE DOMESTIC SYSTEMS

A. Furnish and install label reading “CAUTION: NON-POTABLE WATER, DO NOT DRINK” at each fixture served by a non-potable system.

3.06 CONCEALED ITEMS

A. Items concealed above accessible ceilings requiring access, shall have the ceiling marked to indicate such item's location. The marking system shall consist of colored phenolic plates with ½” tall engraved lettering specifying the item concealed; plate shall be applied to ceiling T-bar framing with rivets or other owner approved method below the concealed item. Colors used shall be verified with Owner, and unless directed otherwise, shall be:

1. Fire Protection System Components: Red

2. Domestic Plumbing System Components: Green

3.07 VALVE TAG SCHEDULE

A. Provide the hard laminated Valve Tag Schedule in the mechanical/janitors room.

3.08 VALVE DIAGRAM

A. Provide the hard laminated Valve Diagram in the mechanical/janitors room.

END OF SECTION

SECTION 22 0719

PLUMBING PIPING INSULATION

PART 1 - GENERAL

1.01 SECTION INCLUDES

A. Cellular glass insulation

B. Flexible elastomeric cellular insulation

C. Flexible removable and reusable blanket insulation

D. Glass fiber insulation

E. Hydrous calcium silicate insulation

F. Jacketing and accessories

1.02 RELATED REQUIREMENTS

A. Section 07 8400 - Firestopping

1.03 REFERENCE STANDARDS

A. ASTM A666 - Standard Specification for Annealed or Cold-Worked Austenitic Stainless-Steel Sheet, Strip, Plate, and Flat Bar; 2015

B. ASTM C177 - Standard Test Method for Steady-State Heat Flux Measurements and Thermal Transmission Properties by Means of the Guarded-Hot-Plate Apparatus; 2013

C. ASTM C195 - Standard Specification for Mineral Fiber Thermal Insulating Cement; 2007 (Reapproved 2013)

D. ASTM C449 - Standard Specification for Mineral Fiber Hydraulic-Setting Thermal Insulating and Finishing Cement; 2007 (Reapproved 2013)

E. ASTM C518 - Standard Test Method for Steady-State Thermal Transmission Properties by Means of the Heat Flow Meter Apparatus; 2017

F. ASTM C533 - Standard Specification for Calcium Silicate Block and Pipe Thermal Insulation; 2013

G. ASTM C534/C534M - Standard Specification for Preformed Flexible Elastomeric Cellular Thermal Insulation in Sheet and Tubular Form; 2016

H. ASTM C547 - Standard Specification for Mineral Fiber Pipe Insulation; 2017

I. ASTM C552 - Standard Specification for Cellular Glass Thermal Insulation; 2016a

J. ASTM C553 - Standard Specification for Mineral Fiber Blanket Thermal Insulation for Commercial and Industrial Applications; 2013

K. ASTM C795 - Standard Specification for Thermal Insulation for Use in Contact with Austenitic Stainless Steel; 2008 (Reapproved 2013)

L. ASTM C1695 - Standard Specification for Fabrication of Flexible Removable and Reusable Blanket Insulation for Hot Service; 2010 (Reapproved 2015)

M. ASTM E84 - Standard Test Method for Surface Burning Characteristics of Building Materials; 2017

N. ASTM E96/E96M - Standard Test Methods for Water Vapor Transmission of Materials; 2016

O. UL 723 - Standard for Test for Surface Burning Characteristics of Building Materials; Current Edition, Including All Revisions

1.04 SUBMITTALS

A. See Section 01 3000 - Administrative Requirements for submittal procedures

B. Product Data: Provide product description, thermal characteristics, list of materials and thickness for each service, and locations.

1.05 QUALITY ASSURANCE

A. Applicator Qualifications: Company specializing in performing the type of work specified in this section with minimum 5 years of documented experience

1.06 DELIVERY, STORAGE, AND HANDLING

A. Accept materials on site, labeled with manufacturer's identification, product density, and thickness.

1.07 FIELD CONDITIONS

A. Maintain ambient conditions required by manufacturers of each product.

B. Maintain temperature before, during, and after installation for minimum of 24 hours.

PART 2 - PRODUCTS

2.01 REGULATORY REQUIREMENTS

A. Surface Burning Characteristics: Flame spread index/Smoke developed index of 25/50, maximum, when tested in accordance with ASTM E84 or UL 723

2.02 GLASS FIBER INSULATION

A. Manufacturers:

1. CertainTeed Corporation
2. Johns Manville Corporation
3. Knauf Insulation
4. Owens Corning Corporation; Fiberglas Pipe Insulation ASJ
5. Manson Insulation

B. Insulation: ASTM C547 and ASTM C795; rigid molded, noncombustible

1. K Value: ASTM C177, 0.24 at 75 degrees F
2. Maximum Service Temperature: 850 degrees F
3. Maximum Moisture Absorption: 0.2 percent by volume
4. Maximum flame/smoke spread developed: 25/50

C. Vapor Barrier Jacket: White Kraft paper with glass fiber yarn, bonded to aluminized film; moisture vapor transmission when tested in accordance with ASTM E96/E96M of 0.02 perm-inches

D. Vapor Barrier Lap Adhesive: Compatible with insulation

E. Insulating Cement/Mastic: ASTM C195; hydraulic setting on mineral wool

F. Outdoor Vapor Barrier Mastic: Vinyl emulsion type acrylic or mastic, compatible with insulation, black color

G. Outdoor Breather Mastic: Vinyl emulsion type acrylic or mastic, compatible with insulation, black color

H. Insulating Cement: ASTM C449

2.03 FLEXIBLE REMOVABLE AND REUSABLE BLANKET INSULATION

A. Insulation: ASTM C553 Type V; flexible, noncombustible

1. Comply with ASTM C1695

2. K Value: 0.37 at 100 degrees F, when tested in accordance with ASTM C177 or ASTM C518

3. Minimum Service Temperature: 32 degrees F

4. Maximum Service Temperature: 500 degrees F

5. Maximum Water Vapor Absorption: Less than 5.0 percent by weight

2.04 CELLULAR GLASS INSULATION

A. Manufacturers:

1. Pittsburgh Corning Corporation

B. Insulation: ASTM C552, Type II

1. K Value: 0.35 at 100 degrees F

2. Service Temperature Range: From 250 degrees F to 800 degrees F

3. Water Vapor Permeability: 0.005 perm inch maximum per inch

4. Water Absorption: 0.5 percent by volume, maximum

2.05 HYDROUS CALCIUM SILICATE INSULATION

A. Manufacturers:

1. Johns Manville Corporation

B. Insulation: ASTM C533 and ASTM C795; rigid molded, asbestos free, gold color

1. K Value: 0.40 at 300 degrees F when tested in accordance with ASTM C177 or ASTM C518

2. Maximum Service Temperature: 1,200 degrees F

3. Density: 15 pcf

C. Tie Wire: 0.048-inch stainless steel with twisted ends on maximum 12-inch centers

D. Insulating Cement: ASTM C449

2.06 FLEXIBLE ELASTOMERIC CELLULAR INSULATION

A. Manufacturer:

1. Aeroflex USA, Inc

2. Armacell LLC; AP Armaflex

3. K-Flex USA LLC; Insul-Tube

4. Durkflex

B. Insulation: Preformed flexible elastomeric cellular rubber insulation complying with ASTM C534/C534M Grade 1; use molded tubular material wherever possible.

1. Minimum Service Temperature: Minus 40 degrees F

2. Maximum Service Temperature: 220 degrees F

3. Connection: Waterproof vapor barrier adhesive

4. K" Value: 0.25 Btu-in per hour per square foot °F at 75 degrees F

5. Maximum flame/smoke spread developed: 25/50

6. Maximum water vapor permeability, wet cup, perm-in 0.10

7. Fiber free, formaldehyde-free, and low VOC's

8. Install with fitting covers or installers shall have training through Armacell Qualified Installer Program (AQIP) or equivalent.

9. Provide black color in all cases except provide white color if exposed to view or specifically called out on the plans.

C. Elastomeric Foam Adhesive: Air dried, contact adhesive, compatible with insulation

2.07 JACKETING AND ACCESSORIES

A. PVC Plastic:

1. Manufacturers:

a. Johns Manville Corporation; Zeston 2000

2. Jacket: One-piece molded type fitting covers and sheet material, gloss white color.

   a. Minimum Service Temperature: 0 degrees F

   b. Maximum Service Temperature: 150 degrees F

   c. Moisture Vapor Permeability: 0.002 perm inch, maximum, when tested in accordance with ASTM E96/E96M

   d. Thickness: 10 mil, 0.010 inch

   e. Connections: Pressure sensitive color matching vinyl tape

B. Canvas Jacket: UL listed 6 oz/sq yd plain weave cotton fabric treated with dilute fire-retardant lagging adhesive

   1. Lagging Adhesive: Compatible with insulation

C. Aluminum Jacket: ASTM B209 (ASTM B209M) formed aluminum sheet

   1. Thickness: 0.016-inch sheet

   2. Finish: Embossed

   3. Joining: Longitudinal slip joints and 2-inch laps

   4. Fittings: 0.016-inch-thick die shaped fitting covers with factory attached protective liner

   5. Metal Jacket Bands: 3/8 inch wide; 0.015-inch-thick aluminum

D. Stainless Steel Jacket: ASTM A666, Type 304 stainless steel

   1. Thickness: 0.010 inch

   2. Finish: Smooth

   3. Metal Jacket Bands: 3/8 inch wide; 0.010-inch-thick stainless steel

PART 3 - EXECUTION

3.01 EXAMINATION

A. Verify that piping has been tested before applying insulation materials.

B. Verify that surfaces are clean and dry, with foreign material removed.

3.02 INSTALLATION

A. Install in accordance with manufacturer's instructions.

B. Exposed Piping: Locate insulation and cover seams in least visible locations.

C. Neatly finish insulation at supports, protrusions, and interruptions.

D. Insulated pipes conveying fluids below ambient temperature: Insulate entire system including fittings, valves, unions, flanges, strainers, flexible connections, pump bodies, and expansion joints.

E. Glass fiber insulated pipes conveying fluids below ambient temperature:

1. Provide vapor barrier jackets, factory-applied or field-applied. Secure with self-sealing longitudinal laps and butt strips with pressure-sensitive adhesive. Secure with outward clinch expanding staples and vapor barrier mastic.

2. Insulate fittings, joints, and valves with molded insulation of like material and thickness as adjacent pipe. Finish with glass cloth and vapor barrier adhesive or PVC fitting covers.

F. For hot piping conveying fluids 140 degrees F or less, do not insulate flanges and unions at equipment, but bevel and seal ends of insulation.

G. Glass fiber insulated pipes conveying fluids above ambient temperature:

1. Provide standard jackets, with or without vapor barrier, factory-applied or field-applied. Secure with self-sealing longitudinal laps and butt strips with pressure sensitive adhesive.

2. Insulate fittings, joints, and valves with insulation of like material and thickness as adjoining pipe. Finish with glass cloth and adhesive or PVC fitting covers.

H. Insulated Pipe Supports and Shields:

1. Install in place at each hanger and support as required by Section 22 1005 Plumbing Piping prior to insulating.

2. Application: Piping 1-1/2 inches diameter or larger

3. Shields: Galvanized steel or PVC as follows:

a. 20 gauge (18 gauge for pipe larger than 3 inches) galvanized steel between pipe hangers or pipe hanger rolls and insulated pipe supports. Shield shall cover a minimum of 40% of the insulation where the pipe is supported from the bottom and 100% of the insulation where the pipe is clamped.

b. PVC shield the full diameter of the pipe insulation with 20-gauge galvanized steel shield riveted to the PVC.

c. Utilize the Armacell Insulguard pipe shield system.

4. Insulated Pipe Supports Location: Between support shield and piping and under the finish jacket

5. Insulated Pipe Support Configuration: Minimum 6 inches long, of same thickness and contour as adjoining insulation. Provide 9 inches (230 mm) long insulated pipe support and 18-gauge galvanized steel shield for pipes larger than 3 inches.

6. Insert Material: See Section 22 1005 Plumbing Piping.

I. Continue insulation through walls, sleeves, pipe hangers, and other pipe penetrations except where prohibited by code. Finish at supports, protrusions, and interruptions. At fire separations, refer to Fire Stop Section 07 8400.

J. Pipe Exposed in Mechanical Equipment Rooms or Finished Spaces (less than 10 feet above finished floor): Finish with PVC jacket and fitting covers.

K. Exposed Work: Finish with PVC jacket and fitting covers applied after pipe insulation is installed. A pre-cut "Hi-Lo Temp" insulation insert, conforming to the UL 25/50 rating, shall be snugly tucked around the fitting making sure the fitting is covered with the full thickness of insulation.

1. All others provide covering in pad form, constructed as follows: Use 1-inch-thick Owens-Corning Fiberglas TIW Glass Wool, Type I, non-oiled, fully enclosed on all sides and edges within tight-weave canvas jacket. Attach Bergen hooks around edges of pad. Fit pad to device with edges tightly butted and secure with copper wire laced between hooks. Provide vapor seal where vapor seal is required for adjacent insulation.

L. Exterior Applications: Provide vapor barrier jacket. Insulate fittings, joints, and valves with insulation of like material and thickness as adjoining pipe, and finish with glass mesh reinforced vapor barrier cement. Cover with aluminum jacket with seams located on bottom side of horizontal piping.

M. Installation of below ground domestic hot water piping insulation: All piping shall be insulated with cellular glass with heat sealed "pittwrap" or pre-insulated pipe system with Type K copper carrier (See Section 23 0719 - HVAC Piping Insulation) with schedule 80 PVC or HDPE jacket.

N. Gauge Lines: Insulate to the gauge shutoff valve.

O. Heat Traced Piping: Insulate fittings, joints, and valves with insulation of like material, thickness, and finish as adjoining pipe. Size large enough to enclose pipe and heat tracer. Cover with aluminum jacket with seams located on bottom side of horizontal piping.

P. Elastomeric Insulation Installation:

1. For PEX piping installation, elastomeric insulation shall be installed continuous through stud framing and all penetration locations through walls, floors, and ceilings.

2. Elastomeric insulation with wall thicknesses greater than 1” shall not be installed in air plenums unless specifically UL723 listed for use in a plenum.

3. All elastomeric foam and sheet seams shall be sealed with adhesive per the insulation manufacturer’s recommendations.

4. Install elastomeric insulation on all PEX domestic hot water and recirculation water piping.

3.03 PIPE HANGERS

A. Do not allow pipes to come in contact with hangers.

3.04 SCHEDULES

A. Plumbing Systems:

1. Domestic Hot Water Supply (including Recirculation):

a. Glass Fiber Insulation:

1) For Pipe Size Range of 1/2 to 1-1/4 inch, provide insulation thickness of: 1 inch.

2) For Pipe Size Range of 1-1/2 inch and greater, provide insulation thickness of: 1-1/2 inch.

b. Cellular Glass Insulation and Pre-insulated Piping Systems for underground applications: For all pipe sizes, provide insulation thickness of: 1-1/2 inch.

c. Flexible Elastomeric Cellular Insulation (PEX only): For all pipe sizes, provide insulation thickness of: 1 inch.

2. Domestic Cold Water:

a. Glass Fiber: For all pipe sizes on metal pipe, provide insulation thickness of: 1 inch.

b. Flexible Elastomeric Cellular Insulation (PEX pipe): Not Required.

3. Roof Drainage Above Grade for the greater of 10 feet or through all horizontal pipe:

   a. Flexible Elastomeric Cellular Insulation: For all pipe sizes, provide insulation thickness of: 1 inch.

B. Other Systems:

1. Humidifier Piping:

   a. Glass Fiber: For all pipe sizes, provide insulation thickness of: 1 inch.

   b. Expanded Polystyrene Insulation: For all pipe sizes, provide insulation thickness of: 1 inch.

2. Piping Exposed to Freezing or Semi-Heated Spaces (less than 50 degrees F.) with or without Heat Tracing:

   a. Glass Fiber: For all pipe sizes, provide insulation thickness of: 1-1/2 inch.

   b. Flexible Elastomeric Cellular Insulation: For all pipe sizes, provide insulation thickness of: 1-1/2 inch.

3. Copper Condensate Piping:

   a. Glass Fiber: For all pipe sizes, provide insulation thickness of: 1 inch.

   b. Flexible Elastomeric Cellular Insulation: For all pipe sizes, provide insulation thickness of: 1 inch.

END OF SECTION

SECTION 22 1005

PLUMBING PIPING

PART 1 - GENERAL

1.01 SECTION INCLUDES

A. Sanitary waste piping, buried within 5 feet of building

B. Sanitary waste piping, above grade

C. Domestic water piping, buried beyond 5 feet of building

D. Domestic water piping, buried within 5 feet of building

E. Domestic water piping, above grade

F. Storm drainage piping, buried within 5 feet of building

1. Storm drainage piping, above grade
2. Natural gas piping, buried beyond 5 feet of building
3. Natural gas piping, buried within 5 feet of building
4. Natural gas piping, above grade
5. Pipe flanges, unions, and couplings
6. Pipe hangers and supports
7. Pipe sleeve-seal systems
8. Pressure reducing valves
9. Pressure relief valves
10. Strainers

1.02 RELATED REQUIREMENTS

A. Section 22 0548 - Vibration and Seismic Controls for Plumbing Piping and Equipment

B. Section 22 0553 - Identification for Plumbing Piping and Equipment

1.03 REFERENCE STANDARDS

A. ANSI Z21.22 - American National Standard for Relief Valves and Automatic Gas Shutoff Devices for Hot Water Supply Systems; 2015

B. ASME B16.18 - Cast Copper Alloy Solder Joint Pressure Fittings; 2012

C. ASME B16.22 - Wrought Copper and Copper Alloy Solder-Joint Pressure Fittings; 2013

D. ASME B16.23 - Cast Copper Alloy Solder Joint Drainage Fittings - DWV; 2016

E. ASME B16.29 - Wrought Copper and Wrought Copper Alloy Solder Joint Drainage Fittings - DWV; 2012

F. ASME B31.9 - Building Services Piping; 2014

G. ASME BPVC-IV - Boiler and Pressure Vessel Code, Section IV - Rules for Construction of Heating Boilers; 2017

H. ASME BPVC-IX - Boiler and Pressure Vessel Code, Section IX - Welding, Brazing, and Fusing Procedures; Welders; Brazers; and Welding, Brazing and Fusing Operators; 2017

I. ASSE 1003 - Performance Requirements for Water Pressure Reducing Valves for Domestic Water Distribution Systems; 2009

J. ASTM A36/A36M - Standard Specification for Carbon Structural Steel; 2014

K. ASTM A47/A47M - Standard Specification for Ferritic Malleable Iron Castings; 1999 (Reapproved 2014)

L. ASTM A123/A123M - Standard Specification for Zinc (Hot-Dip Galvanized) Coatings on Iron and Steel Products; 2017

M. ASTM A269/A269M - Standard Specification for Seamless and Welded Austenitic Stainless-Steel Tubing for General Service; 2015a

N. ASTM B32 - Standard Specification for Solder Metal; 2008 (Reapproved 2014)

O. ASTM B42 - Standard Specification for Seamless Copper Pipe, Standard Sizes; 2015a

P. ASTM B88 - Standard Specification for Seamless Copper Water Tube; 2016

Q. ASTM B88M - Standard Specification for Seamless Copper Water Tube (Metric); 2016

R. ASTM B306 - Standard Specification for Copper Drainage Tube (DWV); 2013

S. ASTM B813 - Standard Specification for Liquid and Paste Fluxes for Soldering of Copper and Copper Alloy Tube; 2016

T. ASTM B828 - Standard Practice for Making Capillary Joints by Soldering of Copper and Copper Alloy Tube and Fittings; 2016

U. ASTM C564 - Standard Specification for Rubber Gaskets for Cast Iron Soil Pipe and Fittings; 2014

V. ASTM D2239 - Standard Specification for Polyethylene (PE) Plastic Pipe (SIDR-PR) Based on Controlled Inside Diameter; 2012a

W. ASTM D2564 - Standard Specification for Solvent Cements for Poly (Vinyl Chloride) (PVC) Plastic Piping Systems; 2012

X. ASTM D2609 - Standard Specification for Plastic Insert Fittings for Polyethylene (PE) Plastic Pipe; 2015

Y. ASTM D2657 - Standard Practice for Heat Fusion Joining of Polyolefin Pipe and Fittings; 2007 (Reapproved 2015)

Z. ASTM D2665 - Standard Specification for Poly (Vinyl Chloride) (PVC) Plastic Drain, Waste, and Vent Pipe and Fittings; 2014

AA. ASTM D2855 - Standard Practice for the Two-Step (Primer & Solvent Cement) Method of Joining Poly (Vinyl Chloride) (PVC) or Chlorinated Poly (Vinyl Chloride) (CPVC) Pipe and Piping Components with Tapered Sockets; 2015

BB. ASTM D3034 - Standard Specification for Type PSM Poly (Vinyl Chloride) (PVC) Sewer Pipe and Fittings; 2016

CC. ASTM E84 - Standard Test Method for Surface Burning Characteristics of Building Materials; 2017

DD. ASTM D4101 - Standard Specification for Polypropylene Injection and Extrusion Materials; 2014, with Editorial Revision (2016)

EE. ASTM F876 - Standard Specification for Crosslinked Polyethylene (PEX) Tubing; 2017

FF. ASTM F877 - Standard Specification for Crosslinked Polyethylene (PEX) Plastic Hot- and Cold-Water Distribution Systems; 2011a

GG. ASTM F1960 - Standard Specification for Cold Expansion Fittings with PEX Reinforcing Rings for Use with Cross-linked Polyethylene (PEX) Tubing; 2015

HH. AWS A5.8M/A5.8 - Specification for Filler Metals for Brazing and Braze Welding; 2011 (Amended 2012)

II. AWWA C550 - Protective Interior Coatings for Valves and Hydrants; 2017

JJ. AWWA C606 - Grooved and Shouldered Joints; 2015

KK. AWWA C651 - Disinfecting Water Mains; 2014

LL. AWWA C900 - Polyvinyl Chloride (PVC) Pressure Pipe, 4 In. Through 12 In. (100 mm Through 300 mm), for Water Transmission and Distribution; 2016

MM. CISPI 301 - Standard Specification for Hubless Cast Iron Soil Pipe and Fittings for Sanitary and Storm Drain, Waste and Vent Piping Applications; 2009 (Revised 2012)

NN. CISPI 310 - Specification for Coupling for Use in Connection with Hubless Cast Iron Soil Pipe and Fittings for Sanitary and Storm Drain, Waste, and Vent Piping Applications; 2011 (Revised 2012)

OO. ICC-ES AC01 - Acceptance Criteria for Expansion Anchors in Masonry Elements; 2015

PP. ICC-ES AC106 - Acceptance Criteria for Predrilled Fasteners (Screw Anchors) in Masonry Elements; 2015

QQ. ICC-ES AC193 - Acceptance Criteria for Mechanical Anchors in Concrete Elements; 2015

RR. ICC-ES AC308 - Acceptance Criteria for Post-Installed Adhesive Anchors in Concrete Elements; 2016

SS. MSS SP-58 - Pipe Hangers and Supports - Materials, Design, Manufacture, Selection, Application, and Installation; 2009

TT. NSF 61 - Drinking Water System Components - Health Effects; 2017

UU. NSF 372 - Drinking Water System Components - Lead Content; 2016

VV. PPI TR-4 - PPI Listing of Hydrostatic Design Basis (HDB), Hydrostatic Design Stress (HDS), Strength Design Basis (SDB), Pressure Design Basis (PDB), and Minimum Required Strength (MRS) Ratings For Thermoplastic Piping Materials or Pipe; 2017

WW. UL 723 - Standard for Test for Surface Burning Characteristics of Building Materials; Current Edition, Including All Revisions

1.04 SUBMITTALS

A. Product Data: Provide data on pipe materials, pipe fittings, valves, and accessories. Provide manufacturers catalog information. Indicate valve data and ratings.

B. Welder Certificate: Include welders certification of compliance with ASME BPVC-IX.

C. Shop Drawings: For non-penetrating rooftop supports, submit detailed layout developed for this project, with design calculations for loadings and spacings.

D. Maintenance Materials: Furnish the following for Owner's use in maintenance of project.

1. See Section 01 6000 - Product Requirements for additional provisions.

E. Operation and Maintenance Data:

1. Domestic water sterilization test

2. Domestic water pressure tests

1.05 QUALITY ASSURANCE

A. Perform work in accordance with applicable codes.

B. Valves: Manufacturer's name and pressure rating marked on valve body.

C. Welding Materials and Procedures: Conform to ASME BPVC-IX and applicable state labor regulations.

D. Welder Qualifications: Certified in accordance with ASME BPVC-IX.

E. Identify pipe with marking including size, ASTM material classification, ASTM specification, potable water certification, water pressure rating.

F. Domestic water fittings, joining materials, and all other appurtenances in contact with potable water shall be lead-free except those specifically exempted in Section 3874 of the Safe Water Drinking Act.

1. Lead-free shall mean:

a. Not containing more than 0.2% lead when used with respect to solder and flux; and

b. Not more than a weighted average of 0.25% when used with respect to the vetted surfaces of pipes, pipe fittings, plumbing fittings, and fixtures

1.06 DELIVERY, STORAGE, AND HANDLING

A. Provide temporary end caps and closures on piping and fittings. Maintain in place until installation.

B. Protect piping systems from entry of foreign materials by temporary covers, completing sections of the work, and isolating parts of completed system.

PART 2 - PRODUCTS

2.01 GENERAL REQUIREMENTS

A. Potable Water Supply Systems: Provide piping, pipe fittings, and solder and flux (if used), that comply with NSF 61 and NSF 372 for maximum lead content; label pipe and fittings.

B. Plenum-Installed Acid Waste Piping: Flame-spread index equal or below 25 and smoke-spread index equal or below 50 according to ASTM E84 or UL 723 tests.

2.02 SANITARY WASTE PIPING, BURIED WITHIN 5 FEET OF BUILDING

A. Cast Iron Pipe: Conform to CISPI 301, hubless pipe and fittings

1. Manufacturers:

a. AB&I

b. Charlotte

c. Tyler

B. Joints: CISPI 310, neoprene gasket and stainless-steel clamp and shield assemblies. Couplings shall be constructed of 300 Series type stainless steel with a minimum shield thickness equal to 0.007. There shall be a minimum of 2 bands for pipe sizes up to 4” and a minimum of 4 bands for pipe sizes 5” and larger. Coupling shall be capable of holding 15 psi of pressure. Sealing bands shall have a minimum thickness of 0.026 and require a minimum of 80-inch lbs. torque per band. Neoprene gasket shall meet ASTM C564.

1. Manufacturers:

a. Thermafit Heavy Duty

b. Clamp-All HI-TORQ 80

c. Husky 4000

d. Ideal Pow'r-Gear

e. MiFab MI-QXHUB

C. PVC Pipe: ASTM D2665 and ASTM D3034, schedule 40, DWV, solid core pipe.

1. Fittings: PVC

2. Joints: ASTM D2564

   a. Mechanical Joints: Mechanical joints on drainage pipe shall be made with an elastomeric seal conforming to ASTM C 1173, ASTM D 3212 or CSA CAN/CSA-B602. Mechanical joints shall not be installed in above-ground systems, unless otherwise approved. Joints shall be installed in accordance with the manufacturer's instructions.

   b. Plastic to Cast Iron Mechanical Joints: CISPI 310, neoprene gasket and stainless-steel clamp and shield assemblies. Couplings shall be constructed of 300 Series type stainless steel with a minimum shield thickness equal to 0.015. There shall be a minimum of 2 bands for pipe sizes up to 4" and a minimum of 4 bands for pipe sizes 5" and larger. Coupling shall be capable of holding 15 psi of pressure. Sealing bands shall have a minimum thickness of 0.026 and require a minimum of 80-inch lbs. torque per band. Neoprene gasket shall meet ASTM C564.

      1) Manufacturers:

         a) Husky 4200

   c. Solvent Cementing: Joint surfaces shall be clean and free from moisture. A purple primer that conforms to ASTM F 656 shall be applied. Solvent cement not purple in color and conforming to ASTM D 2564, CSA CAN/CSA-B137.3, CSA CAN/CSA-B181.2 or CSA CAN/CSA-B182.1 shall be applied to all joint surfaces. The joint shall be made while the cement is wet and shall be in accordance with ASTM D 2855. Solvent-cement joints shall be permitted above or below ground.

   d. Threaded Joints: Threads shall conform to ASME B1.20.1. Schedule 80 or heavier pipe shall be permitted to be threaded with dies specifically designed for plastic pipe. Approved thread lubricant or tape shall be applied on the male threads only.

3. Manufacturers:

   a. Charlotte

   b. Mueller Industries

   c. Cresline

2.03 SANITARY WASTE PIPING, ABOVE GRADE

A. Cast Iron Pipe: Conform to CISPI 301, hubless pipe and fittings.

1. Manufacturers:

a. AB&I

b. Charlotte

c. Tyler

B. Joints: CISPI 310, neoprene gaskets and stainless-steel clamp-and-shield assemblies. Couplings shall be constructed of 300 Series type stainless steel. There shall be 2 bands for pipe sizes up to 4” and a minimum of 4 bands for pipe sizes 5” and larger. Sealing bands shall require a minimum of 60-inch lbs. torque per band. Neoprene gasket shall meet ASTM C 564.

1. Manufacturers:

a. Thermafit Regular Duty

b. Tyler Standard No-Hub

c. Clamp-All HI-TORQ 80

d. Husky 2000

e. Anaco

f. Ideal Pow'r Gear

g. MiFab MI-QHUB

C. Flashing: Lead flashing, 4 lbs. per sq. ft. of sheet lead flashing. Flashing skirt radius from the inserted pipe of at least 8 inches or 2-foot square.

1. Manufacturers:

a. Elmdor Stoneman

D. Vent Cap: Vandal Resistant. Cast Iron. Minimum of 2 to 1 open area compared to the cross-sectional area of the vent pipe

1. Manufacturers:

a. Elmdor Stoneman

E. PVC Pipe: ASTM D2665, schedule 40, DWV, solid core pipe

1. Fittings: PVC

2. Joints: ASTM D2564

a. Mechanical Joints: Mechanical joints on drainage pipe shall be made with an elastomeric seal conforming to ASTM C 1173, ASTM D 3212 or CSA CAN/CSA-B602. Mechanical joints shall not be installed in above-ground systems, unless otherwise approved. Joints shall be installed in accordance with the manufacturer's instructions.

b. Solvent Cementing: Joint surfaces shall be clean and free from moisture. A purple primer that conforms to ASTM F 656 shall be applied. Solvent cement not purple in color and conforming to ASTM D 2564, CSA CAN/CSA-B137.3, CSA CAN/CSA-B181.2 or CSA CAN/CSA-B182.1 shall be applied to all joint surfaces. The joint shall be made while the cement is wet and shall be in accordance with ASTM D 2855. Solvent-cement joints shall be permitted above or below ground.

c. Threaded Joints: Threads shall conform to ASME B1.20.1. Schedule 80 or heavier pipe shall be permitted to be threaded with dies specifically designed for plastic pipe. Approved thread lubricant or tape shall be applied on the male threads only.

3. Manufacturers:

a. Charlotte

b. Mueller Industries

c. Cresline

2.04 CHEMICAL RESISTANT WASTE PIPING

A. PP Pipe: Polypropylene, flame retardant for above ground pipe. Material shall conform to ASTM D4101. Pipe shall be grooved for mechanical joint systems and plain end for socket fusion systems.

1. Fittings: Schedule 40 Polypropylene.

2. Joints:

a. Mechanical Joints: Pipe and fittings shall be joined by the use of mechanical joint having a corrosion resistance equal to the pipe and fittings. The mechanical joint system shall incorporate a cut groove for axial restraint.

b. Fusion Joints: All joints to be made by manufacturer's recommended heat tool to produce hermetically sealed joint which encompasses heat joining of pipe and fitting standards and practices to meet ASTM D2657.

3. Manufacturers of Complete System:

a. Enfield

b. Fuseal II

c. Orion

d. Zurn

2.05 DOMESTIC WATER PIPING, BURIED BEYOND 5 FEET OF BUILDING

A. PE Pipe: ASTM D2239

1. Fittings: ASTM D2609, PE

2. Joints: Mechanical with stainless steel clamp

B. Schedule 80 PVC Pipe: AWWA C900

2.06 DOMESTIC WATER PIPING, BURIED WITHIN 5 FEET OF BUILDING

A. Copper Pipe: ASTM B42, hard drawn, type K (A)

1. Fittings: ASME B16.18, cast copper alloy or ASME B16.22 wrought copper and bronze

2. Joints: AWS A5.8M/A5.8, BCuP copper/silver braze, lead free conforming to UPC standards for solder and all local code requirements

a. Manufacturers:

1) Canfield

2) J.W. Harris

3) Aqua-Clean

B. Cross-Linked Polyethylene (PEX) Pipe: ASTM F876 or ASTM F877.

1. Manufacturers:

a. Uponor, Inc

b. Wirsbo

c. Zurn Industries, LLC

d. Viega

e. Rehau

f. Watts

g. Mr. PEX

h. Heat Link

2. PPI TR-4 Pressure Design Basis:

a. 100 psig at maximum 180 degrees F

3. Fittings: Brass and copper

4. Fittings: Brass and engineered polymer (EP) ASTM F1960

5. Joints: Mechanical compression fittings

6. Joints: ASTM F1960 cold-expansion fittings

2.07 DOMESTIC WATER PIPING, ABOVE GRADE

A. Copper Tube: ASTM B88 (ASTM B88M), Type L (B), hard drawn

1. Fittings: ASME B16.18, cast copper alloy or ASME B16.22, wrought copper and bronze

2. Joints: ASTM B32, alloy Sn95 solder, lead free conforming to UPC standards for solder and all local code requirements.

a. Manufacturers:

1) Canfield

2) J.W. Harris

3) Aqua-Clean

3. Mechanical Press Sealed Fittings: Double pressed type, NSF 61 and NSF 372 approved or certified, utilizing EPDM, nontoxic synthetic rubber sealing elements.

a. Manufacturers:

1) Grinnell Products, a Tyco Business

2) Viega LLC

3) Nibco

4. Mechanical Couplings on pipe 2.5" and larger: NSF 61

a. Manufacturers:

1) Victaulic

2) Gruvlok

B. Cross-Linked Polyethylene (PEX) Pipe: ASTM F876 or ASTM F877. Pipe shall be NSF 61 and NSF 14 certified.

1. Manufacturers:

a. Uponor, Inc

b. Viega LLC

c. Zurn Industries, LLC

d. Watts

e. Rehau

f. Mr. PEX

g. Heat Link

2. PPI TR-4 Pressure Design Basis:

a. 100 psig at maximum 180 degrees F

3. Fittings: Brass and engineered polymer (EP) ASTM F1960

4. Joints: Mechanical compression fittings

5. Joints: ASTM F1960 cold-expansion fittings

C. Stainless Steel Pipe: ASTM A269/A269M, Grade TP304 alloy welded and seamless

1. Mechanical Press Sealed Fittings Double pressed type, NSF 61 and NSF 372 approved or certified, utilizing EPDM, non-toxic synthetic rubber sealing elements.

a. Manufacturers:

1) Grinnell Products, a Tyco Business

2) Viega LLC

3) Victaulic

4) Nibco

2. Mechanical Couplings on Pipe 2.5" and Larger: NSF 61

a. Manufacturers:

1) Victaulic

2) Gruvlok

2.08 STORM DRAINAGE PIPING, BURIED WITHIN 5 FEET OF BUILDING

A. Cast Iron Pipe: Conform to CISPI 301, hubless pipe and fittings.

1. Manufacturers:

a. AB&I

b. Charlotte

c. Tyler

2. Joints: CISPI 310, neoprene gasket and stainless-steel clamp and shield assemblies. Couplings shall be constructed of 300 Series type stainless steel with a minimum shield thickness equal to 0.015. There shall be 2 bands for pipe sizes up to 4” and a minimum of 4 bands for pipe sizes 5” and larger. Coupling shall be capable of holding 15 psi of pressure. Sealing bands shall have a minimum thickness of 0.026 and require a minimum of 80-inch lbs. torque per band. Neoprene gasket shall meet ASTM C564.

a. Thermafit Heavy Duty

b. Clamp-All HI-TORQ 80

B. Copper Tube: ASTM B306, DWV.

1. Fittings: ASME B16.23, cast copper, or ASME B16.29, wrought copper

2. Joints: ASTM B32, alloy Sn50 solder

C. PVC Pipe: ASTM D2665 or ASTM D3034, schedule 40, DWV, solid core pipe

1. Fittings: PVC

2. Joints: ASTM D2564

a. Mechanical Joints: Mechanical joints on drainage pipe shall be made with an elastomeric seal conforming to ASTM C 1173, ASTM D 3212 or CSA CAN/CSA-B602. Mechanical joints shall not be installed in above-ground systems, unless otherwise approved. Joints shall be installed in accordance with the manufacturer's instructions.

b. Solvent Cementing: Joint surfaces shall be clean and free from moisture. A purple primer that conforms to ASTM F 656 shall be applied. Solvent cement not purple in color and conforming to ASTM D 2564, CSA CAN/CSA-B137.3, CSA CAN/CSA-B181.2 or CSA CAN/CSA-B182.1 shall be applied to all joint surfaces. The joint shall be made while the cement is wet and shall be in accordance with ASTM D 2855. Solvent-cement joints shall be permitted above or below ground.

c. Threaded Joints: Threads shall conform to ASME B1.20.1. Schedule 80 or heavier pipe shall be permitted to be threaded with dies specifically designed for plastic pipe. Approved thread lubricant or tape shall be applied on the male threads only.

3. Manufacturers:

a. Charlotte

b. Mueller Industries

c. Cresline

2.09 STORM DRAINAGE PIPING, ABOVE GRADE

A. Cast Iron Pipe: Conform to CISPI 301, hubless pipe and fittings.

1. Manufacturers:

a. AB&I

b. Charlotte

c. Tyler

B. Joints: CISPI 310, neoprene gaskets and stainless steel clamp-and-shield assemblies. Couplings shall be constructed of 300 Series type stainless steel. There shall be 2 bands for pipe sizes up to 4” and a minimum of 4 bands for pipe sizes 5” and larger. Sealing bands shall require a minimum of 60-inch lbs. torque per band. Neoprene gasket shall meet ASTM C564.

1. Thermafit Regular Duty

2. Tyler Standard No-Hub

3. Clamp-All HI-TORQ 80

C. Copper Tube: ASTM B306, DWV

1. Fittings: ASME B16.23, cast copper, or ASME B16.29, wrought copper

2. Joints: ASTM B32, alloy Sn50 solde.

D. PVC Pipe: ASTM D2665 or ASTM D3034, schedule 40, DWV, solid core pipe

1. Fittings: PVC

2. Joints: ASTM D2564

a. Mechanical Joints: Mechanical joints on drainage pipe shall be made with an elastomeric seal conforming to ASTM C 1173, ASTM D 3212 or CSA CAN/CSA-B602. Joints shall be installed in accordance with the manufacturer’s instructions.

b. Solvent Cementing: Joint surfaces shall be clean and free from moisture. A purple primer that conforms to ASTM F 656 shall be applied. Solvent cement not purple in color and conforming to ASTM D 2564, CSA CAN/CSA-B137.3, CSA CAN/CSA-B181.2 or CSA CAN/CSA-B182.1 shall be applied to all joint surfaces. The joint shall be made while the cement is wet and shall be in accordance with ASTM D 2855. Solvent-cement joints shall be permitted above or below ground.

c. Threaded Joints: Threads shall conform to ASME B1.20.1. Schedule 80 or heavier pipe shall be permitted to be threaded with dies specifically designed for plastic pipe. Approved thread lubricant or tape shall be applied on the male threads only.

3. Manufacturers:

a. Charlotte

b. Mueller Industries

c. Cresline

2.10 CONDENSATE PIPING

A. Schedule 40 PVC, solid core

B. Type L copper for use in air plenum, penetrating a fire wall, or used with gas-fired equipment

C. Insulate per Section 22 0719 Plumbing Piping Insulation.

2.11 FLANGES, UNIONS, AND COUPLINGS

A. Unions for Pipe Sizes 3 Inches and Under:

1. Ferrous pipe: Class 150 malleable iron threaded unions

2. Copper tube and pipe: Class 150 bronze unions with soldered joints

B. Flanges for Pipe Size Over 1 Inch:

1. Ferrous Pipe: Class 150 malleable iron threaded or forged steel slip-on flanges; preformed neoprene gaskets

2. Copper Tube and Pipe: Class 150 slip-on bronze flanges; preformed neoprene gaskets

C. Mechanical Couplings for Grooved and Shouldered Joints: Two or more curved housing segments with continuous key to engage pipe groove, circular C-profile gasket, and bolts to secure and compress gasket.

1. Dimensions and Testing: In accordance with AWWA C606

2. Housing Material: Provide ASTM A47/A47M malleable iron or ductile iron, galvanized.

3. Gasket Material: Nitrile rubber suitable for operating temperature range from minus 20 degrees F to 180 degrees F.

4. Bolts and Nuts: Hot dipped galvanized or zinc-electroplated steel.

5. When pipe is field grooved, provide coupling manufacturer's grooving tools.

6. Manufacturers:

a. Grinnell Products, a Tyco Business

b. Victaulic

c. Gruvlok

D. Dielectric Connections: Union with galvanized or plated steel threaded end, copper solder end, water impervious isolation barrier

2.12 PIPE HANGERS AND SUPPORTS

A. Provide hangers and supports that comply with MSS SP-58.

1. If type of hanger or support for a particular situation is not indicated, select appropriate type using MSS SP-58 recommendations.

2. Hanger Rods: Threaded hot rolled steel, electro-galvanized or cadmium plated. Hanger rods shall be sized so that the total load (including pipe or duct, insulation, hangers, and fluid) does not exceed the following:

   a. 610 pounds for 3/8" diameter rods

   b. 1130 pounds for 1/2" diameter rods

3. Overhead Supports: Individual steel rod hangers attached to structure or to trapeze hangers.

   a. Cold and Hot Pipe Sizes 6 inch and Larger: Double hangers.

4. Trapeze Hangers: Welded steel channel frames attached to structure

5. Vertical Pipe Support: Steel riser clamp, epoxy coated

6. Steel: Provide structural steel per ASTM A36/A36M.

7. Wood: Shall be fire treated

8. Rooftop Supports for Low-Slope Roofs: Steel pedestals with bases that rest on top of roofing membrane, not requiring any attachment to the roof structure and not penetrating the roofing assembly, with support fixtures as specified; and as follows:

   a. Bases: High-density polypropylene

   b. Base Sizes: As required to distribute load sufficiently to prevent indentation of roofing assembly

   c. Steel Components: Stainless steel or carbon steel hot-dip galvanized after fabrication in accordance with ASTM A123/A123M

   d. Attachment/Support Fixtures: As recommended by manufacturer, same type as indicated for equivalent indoor hangers and supports; corrosion-resistant material

   e. Height: Provide minimum clearance of 6 inches under pipe to top of roofing.

f. Manufacturers:

1) PDH

2) Elcen

3) Grinnel

4) B-line

5) Miro Industries, Inc

6) Unistrut

7) Caddy

8) Tolco

B. Plumbing Piping - Drain, Waste, and Vent:

1. Hangers for Pipe Sizes 1/2 Inch to 1-1/2 Inches: Malleable iron, adjustable swivel, split ring

2. Hangers for Pipe Sizes 2 Inches and Over: Carbon steel, adjustable, clevis

3. Wall Support for Pipe Sizes to 3 Inches: Cast iron hook

4. Wall Support for Pipe Sizes 4 Inches and Over: Welded steel bracket and wrought steel clamp

5. Copper Pipe Support: Carbon steel ring, adjustable, copper plated

C. Plumbing Piping - Water:

1. Hangers for Pipe Sizes 1/2 Inch to 1-1/2 Inches: Malleable iron, adjustable swivel, split ring

2. Hangers for Cold Pipe Sizes 2 Inches and Over: Carbon steel, adjustable, clevis

3. Hangers for Hot Pipe Sizes 2 Inches to 4 Inches: Carbon steel, adjustable, clevis

4. Hangers for Hot Pipe Sizes 6 Inches and Over: Adjustable steel yoke, cast iron pipe roll, double hanger

5. Wall Support for Pipe Sizes to 3 Inches: Cast iron hook

6. Wall Support for Pipe Sizes 4 Inches and Over: Welded steel bracket and wrought steel clamp

7. Wall Support for Hot Pipe Sizes 6 Inches and Over: Welded steel bracket and wrought steel clamp with adjustable steel yoke and cast-iron pipe roll

8. Copper Pipe Support: Carbon steel ring, adjustable, copper plated

D. Hanger Fasteners: Attach hangers to structure using appropriate fasteners, as follows:

1. Concrete Wedge Expansion Anchors: Complying with ICC-ES AC193

2. Masonry Wedge Expansion Anchors: Complying with ICC-ES AC01

3. Concrete Screw Type Anchors: Complying with ICC-ES AC193

4. Masonry Screw Type Anchors: Complying with ICC-ES AC106

5. Concrete Adhesive Type Anchors: Complying with ICC-ES AC308

6. Other Types: As required

7. Manufacturers:

a. Powers Fasteners, Inc

b. Rawplug

c. Phillips

d. Hilti

e. Caddy

E. Insulated Pipe Inserts and Insulation Shields:

1. Insulated pipe insert shall have no more than 5% deformation at 100 psi and a thermal conductivity no more than 0.38 Btu/hr./sq. ft./degree F/1-inch thick at 75°F.

2. Insulated pipe insert shall be same thickness as adjoining pipe insulation and sized to match pipe in which it is used on. See Section 22 0719 for insulation sizes.

3. Where elastomeric insulation is being used, pipe inserts may be omitted.

4. Provide shield per Section 22 0719 Plumbing Piping Insulation.

5. Manufacturers:

a. TPS Thermal Pipe Shields

b. B-Line

c. Clement Support Services

d. Snappitz

F. PEX Pipe Hangers and Supports:

1. Provide continuous steel channel pipe supports at all horizontal PEX pipe runs greater than 6’-0” in length.

a. Steel Channel Pipe Supports:

1) 23-gauge, galvanized steel channel with a copper tube size controlled outside diameter

2) Steel channel pipe supports shall be available in lengths up to 9’-0” for pipe sizes ½” - 3 ½”.

3) Secure pipe to channel support with stainless steel straps rated for 300-pound tensile strength.

2. Manufacturers:

a. Uponor PEX-a Pipe, or approved equivalent

3. All horizontal PEX pipe shall utilize steel brackets, clevis, J-hangers, or trapeze style hangers.

2.13 PIPE SLEEVE-SEAL SYSTEMS

A. Manufacturers:

1. The Metraflex Company; MetraSeal

2. Link Seal

B. Modular/Mechanical Seal:

1. Elastomer-based interlocking links continuously fill annular space between pipe and wall-sleeve, wall or casing opening.

2. Watertight seal between pipe and wall-sleeve, wall or casing opening.

3. Size and select seal component materials in accordance to service requirements.

4. Glass reinforced plastic pressure end plates.

2.14 PRESSURE REDUCING VALVES

A. Manufacturers:

1. Amtrol Inc
2. Cla-Val Company
3. Flomatic Valves
4. Watts Regulator Company
5. Wilkins
6. Apollo Conbraco

B. Up to 2 Inches:

1. ASSE 1003, bronze body, stainless steel, and thermoplastic internal parts, fabric reinforced diaphragm, strainer, threaded single union ends.

C. Over 2 Inches:

1. ASSE 1003, cast iron body with interior lining complying with AWWA C550, bronze fitted, elastomeric diaphragm and seat disc, flanged.

2.15 PRESSURE RELIEF VALVES

A. ANSI Z21.22, AGA certified, bronze body, teflon seat, steel stem and springs, automatic, direct pressure actuated.

B. Pressure:

1. Manufacturers:

a. Cla-Val Co

b. Watts Regulator Company

C. Temperature and Pressure:

1. Manufacturers:

a. Cla-Val Co

b. Watts Regulator Company

2.16 STRAINERS

A. Manufacturers:

1. Armstrong International, Inc
2. Bell and Gossett
3. Apollo Conbraco
4. Hoffman
5. Wheatley
6. Nibco

B. Size 2 inch and Under:

1. Threaded brass body for 175 psi CWP, Y pattern with 1/32-inch stainless steel perforated screen
2. Class 150, threaded bronze body 300 psi CWP, Y pattern with 1/32-inch stainless steel perforated screen

C. Size 1-1/2 inch to 4 inch:

1. Class 125, flanged iron body, Y pattern with 1/16-inch stainless steel perforated screen

D. Size 5 inch and Larger:

1. Class 125, flanged iron body, basket pattern with 1/8-inch stainless steel perforated screen

PART 3 - EXECUTION

3.01 EXAMINATION

A. Verify that excavations are to required grade, dry, and not over-excavated.

3.02 PREPARATION

A. Ream pipe and tube ends. Remove burrs. Bevel plain end ferrous pipe.

B. Remove scale and dirt, on inside and outside, before assembly.

C. Prepare piping connections to equipment with flanges or unions.

3.03 GENERAL INSTALLATION

A. Furnish and install complete system of piping, valved as indicated or as necessary to completely control entire apparatus. Pipe drawings are diagrammatic and indicate general location and connections. Piping may have to be offset, lowered, or raised as required or directed at site. This does not relieve this Division from responsibility for proper erection of systems of piping in every respect. Install in accordance with manufacturer's instructions.

B. Provide non-conducting dielectric connections wherever jointing dissimilar metals.

C. Route piping in orderly manner and maintain gradient. Route parallel and perpendicular to walls.

D. Consult all drawings for location of pipe spaces, ducts, electrical equipment, ceiling heights, door openings, window openings, and other details and report discrepancies or possible conflicts to Architect/Engineer before installing pipe.

E. Allow sufficient clearances for installation of pipe insulation in thickness specified. If interferences occur, reroute piping to accommodate insulation.

F. Install piping to maintain headroom, conserve space, and not interfere with use of space, removal of other equipment, ducts, or devices, or block access to doors, windows, or access openings.

G. Group piping whenever practical at common elevations.

H. Install piping to allow for expansion and contraction without stressing pipe, joints, or connected equipment.

I. Provide clearance in hangers and from structure and other equipment for installation of insulation and access to valves and fittings.

J. Provide access where valves and fittings are not exposed.

K. Establish elevations of buried piping outside the building to ensure not less than 3.3 ft (1 m) of cover.

L. Where pipe support members are welded to structural building framing, scrape, brush clean, and apply one coat of zinc rich primer to welding.

M. Provide support for utility meters in accordance with requirements of utility companies.

N. Install valves with stems upright or horizontal, not inverted. Refer to Section 22 0523.

O. Install water piping to ASME B31.9.

P. Sleeve pipes passing through partitions, walls and floors.

Q. Do not use reducing bushings, street elbows, or close nipples.

R. T-drill procedure for connecting pipes will not be allowed.

S. All piping in finished areas shall be installed concealed unless specifically noted otherwise.

T. Provide escutcheons where pipe passes through walls, floors, or ceilings.

U. Install all exposed piping parallel to the closest wall and in a neat, workmanlike manner.

V. Bury water piping 6 inches minimum below bottom of slab and encase in 2 inches minimum of sand.

W. Strainers: Install strainers as indicated. Provide plugged gate or ball valve in blow-off connection on strainers, valve shall be same size as blow-off tapping. Final blow-off shall have a hose connection fitting.

X. Copper Pipe and Tube: Make soldered joints in accordance with ASTM B828, using specified solder, and flux meeting ASTM B813; in potable water systems use flux also complying with NSF 61 and NSF 372.

Y. PVC Pipe: Make solvent-welded joints in accordance with ASTM D2855.

Z. Inserts:

1. Provide inserts for placement in concrete formwork.

2. Provide inserts for suspending hangers from reinforced concrete slabs and sides of reinforced concrete beams.

3. Provide hooked rod to concrete reinforcement section for inserts carrying pipe over 4 inches.

4. Where concrete slabs form finished ceiling, locate inserts flush with slab surface.

AA. Pipe Hangers and Supports:

1. Install in accordance with ASME B31.9.

2. Support horizontal piping as indicated.

3. Install hangers to provide minimum 1/2-inch space between finished covering and adjacent work.

4. Place hangers within 12 inches of each horizontal elbow.

5. Use hangers with 1-1/2-inch minimum vertical adjustment. Design hangers for pipe movement without disengagement of supported pipe.

6. Support vertical piping at every other floor. Support riser piping independently of connected horizontal piping.

7. Where several pipes can be installed in parallel and at same elevation, provide multiple or trapeze hangers.

8. Provide copper plated hangers and supports for copper piping.

9. Provide hangers adjacent to motor-driven equipment with vibration isolation; see Section 22 0548.

10. Support cast iron drainage piping at every joint.

BB. Manufactured Sleeve-Seal Systems:

1. Install manufactured sleeve-seal systems in sleeves located in grade slabs and exterior concrete walls at piping entrances into building.

2. Provide sealing elements of the size, quantity, and type required for the piping and sleeve inner diameter or penetration diameter.

3. Locate piping in center of sleeve or penetration.

4. Install field assembled sleeve-seal system components in annular space between sleeve and piping.

5. Tighten bolting for a watertight seal.

6. Install in accordance with manufacturer's recommendations.

CC. When installing more than one piping system material, ensure system components are compatible and joined to ensure the integrity of the system. Provide necessary joining fittings. Ensure flanges, union, and couplings for servicing are consistently provided.

3.04 SOIL, WASTE, VENT, AND STORM DRAIN SYSTEMS

A. Place cleanouts as follows:

1. Where shown on plans and near bottom of each stack and riser.

2. At every 90 degrees change of direction for horizontal lines.

3. Every 100 feet of horizontal run.

4. Extend cleanout to accessible surface. Do not place cleanouts in carpeted floors. In such locations, use wall type cleanouts.

B. Vent entire waste system to atmosphere. Discharge vent pipe minimum 14 inches above roof. Join lines together in least practicable number before projecting above roof. Set back vent lines so they will not pierce roof near edge or valley. Install vent piping penetrating roofed areas to maintain integrity of roof assembly.

C. Use torque wrench to obtain proper tension in cinch bands on above ground hubless cast iron pipe. Butt ends of pipe against centering flange of coupling.

D. Flash pipes passing through roof (or as shown on the plan) fitted snugly around pipes and caulk between flashing and pipe with flexible waterproof compound. Provide counterflashing fitting with vandal resistant screws. Extend lead up and turn in a minimum of 1" into the pipe. Flashing base shall be at least 24 inches square (or 8-inch radius).

E. Install an expansion joint in each vertical straight run of PVC or polypropylene soil, waste, vent, and drain pipe at intervals in excess of 30 feet. Install and anchor pipe per expansion joint manufacturer's instructions. Provide access panel as required for servicing the expansion joint.

F. Install vertical waste pipe to comply with standard installation practices for suds control.

G. Provide hubless cast iron for the first 20 feet downstream of drains located in the kitchen and boiler room.

H. Reducing size of pipe in the direction of flow is prohibited.

I. Install drainage piping at the following minimum slopes unless otherwise indicated:

1. Building soil and waste drain: 2 percent downward in the direction of flow unless indicated otherwise on the plans

2. Building storm drain: 1 percent downward in direction of flow

J. Field Quality Control:

1. Test storm drainage piping according to procedures of authorities having jurisdiction or, in absence of published procedures, as follows:

a. Test for leaks and defects in new piping and parts of existing piping that have been altered, extended, or repaired. If testing is performed in segments, submit separate report for each test, complete with diagram of portion of piping tested.

b. Leave uncovered and unconcealed new, altered, extended, or replaced storm drainage piping until it has been tested and approved. Expose work that was covered or concealed before it was tested.

c. Test Procedure: Test storm drainage piping on completion of roughing-in. Close openings in piping system and fill with water to point of overflow, but not less than 10- foot head of water. From 15 minutes before inspection starts until completion of inspection, water level must not drop. Inspect joints for leaks.

d. Repair leaks and defects with new materials and retest piping, or portion thereof, until satisfactory results are obtained.

e. Prepare reports for tests and required corrective action.

2. Test force-main piping according to procedures of authorities having jurisdiction or, in absence of published procedures, as follows:

a. Leave uncovered and unconcealed new, altered, extended, or replaced force-main piping until it has been tested and approved. Expose work that was covered or concealed before it was tested.

b. Cap and subject piping to static-water pressure of 50 psig above operating pressure, without exceeding pressure rating of piping system materials. Isolate test source and allow to stand for four hours. Leaks and loss in test pressure constitute defects that must be repaired.

c. Repair leaks and defects with new materials and retest piping, or portion thereof, until satisfactory results are obtained.

d. Prepare reports for tests and required corrective action.

K. Protect drains during remainder of construction period to avoid clogging with dirt and debris and to prevent damage from traffic and construction work.

3.05 ACID WASTE SYSTEM

A. Vent all acid resistant systems with acid resistant piping continuous to through roof vent.

B. All installation of acid waste system shall be performed per manufacturer's recommendations by contractors trained and certified by the manufacturer of the submitted brand.

C. Above ground pipe may have mechanical joints or fused joints.

D. Underground pipe to have fused joints only.

3.06 CROSS-LINKED POLYETHYLENE (PEX) PIPE

A. Provide stainless steel inserts at compression stop valves.

B. All couplings, elbows, tees, reducing tees, adapters, and any other connecting devices shall be of the same manufacturer as the PEX piping.

C. Kinked tubing shall be reformed in accordance with manufacturer's recommendation or cut out and replaced.

D. 90-degree direction turns and wall penetrations shall be provided with a bend support or elbow fitting.

E. Copper sweated and threaded connections are to be made prior to PEX connections.

F. Transition PEX to copper at fire walls. Provide fire stop sealants at fire rated walls.

G. PEX tubing shall be fully seated against shoulder of fitting.

H. Horizontal piping shall be supported every 32".

I. Vertical piping shall be supported every 4'.

J. Allow 1/8" to 3/16" of slack per foot of run for expansion and contraction.

K. PEX tubing shall be installed to allow for expansion and contraction. Do not rigidly attach to structure.

L. Provide sleeves where PEX piping passes through masonry walls.

M. Protect tubing from nail/screw damage with suitable steel plate protectors.

N. The minimum bend radius of PEX tubing is six times its diameter. Smaller radius turns shall be provided with an elbow.

O. Provide insulators where PEX piping passes through metal studs.

P. Supply stops shall be provided with a pipe bracket support from adjacent structure, a pipe clamp, tube talon, and a plastic or metal bend support. (Sioux Chief Universal Slider Bracket or approved equal).

Q. Insulation does not have to be continuous at hanging brackets and clamps.

R. Plastic speed clips may be used for connection to structure. Speed clips shall be listed for use on PEX piping.

3.07 APPLICATION

A. Install unions downstream of valves and at equipment or apparatus connections.

B. Provide flow controls in water recirculating systems where indicated.

3.08 TOLERANCES

A. Drainage Piping: Establish invert elevations within 1/2 inch vertically of location indicated and slope to drain at minimum of 1/4 inch per foot slope.

B. Water Piping: Slope at minimum of 1/32 inch per foot and arrange to drain at low points.

3.09 DOMESTIC WATER PIPING TESTS

A. Tests: As the work progresses each section of the water system shall be tested under a 100psi hydrostatic test held for 2 hours without reduction of pressure (a pressure fluctuation of +/- 1 psi is acceptable). If any leaks occur or piping or valves are found to be defective, same shall be removed and new material installed, and the test made on that section again until all material is found to be satisfactory. Such test shall be made in the presence of the Owner's Representative.

B. Provide written test documentation in the operation and maintenance manual.

3.10 DISINFECTION OF DOMESTIC WATER PIPING SYSTEM

A. Prior to starting work, verify system is complete, flushed, and clean.

B. Ensure acidity (pH) of water to be treated is between 7.4 and 7.6 by adding alkali (caustic soda or soda ash) or acid (hydrochloric).

C. Inject disinfectant, free chlorine in liquid, powder, tablet, or gas form throughout system to obtain 50 to 80 mg/L residual.

D. Bleed water from outlets to ensure distribution and test for disinfectant residual at minimum 15 percent of outlets.

E. Maintain disinfectant in system for 24 hours.

F. If final disinfectant residual tests less than 25 mg/L, repeat treatment.

G. Flush disinfectant from system until residual equal to that of incoming water or 1.0 mg/L.

H. Take samples no sooner than 24 hours after flushing, from 10 percent of outlets and from water entry, and analyze in accordance with AWWA C651.

I. Provide test results in the operation and maintenance manual.

3.11 SERVICE CONNECTIONS

A. Provide new sanitary sewer services. Before commencing work, check invert elevations required for sewer connections, confirm inverts and ensure that these can be properly connected with slope for drainage and cover to avoid freezing.

B. Provide new water service complete with approved reduced pressure backflow preventer and water meter with by-pass valves, pressure reducing valve, and sand strainer.

1. Provide sleeve in wall for service main and support at wall with reinforced concrete bridge. Caulk enlarged sleeve and make watertight with pliable material. Anchor service main inside to concrete wall.

3.12 SCHEDULES

A. Pipe Hanger Spacing:

1. Metal Piping:

a. Pipe Size: 1/2 inch to 1-1/4 inch:

1) Maximum Hanger Spacing: 6.5 ft

2) Hanger Rod Diameter: 3/8 inches

b. Pipe Size: 1-1/2 inch to 2 inch:

1) Maximum Hanger Spacing: 10 ft

2) Hanger Rod Diameter: 3/8 inch

c. Pipe Size: 2-1/2 inch to 3 inch:

1) Maximum Hanger Spacing: 10 ft

2) Hanger Rod Diameter: 1/2 inch

d. Pipe Size: 4 inch to 6 inch:

1) Maximum Hanger Spacing: 10 ft

2) Hanger Rod Diameter: 5/8 inch

e. Pipe Size: 8 inch to 12 inch:

1) Maximum hanger spacing: 14 ft

2) Hanger Rod Diameter: 7/8 inch

f. Pipe Size: 14 inch and Over:

1) Maximum Hanger Spacing: 20 ft

2) Hanger Rod Diameter: 1 inch

2. Plastic Piping:

a. All Sizes:

1) Maximum Hanger Spacing: 6 ft

2) Hanger Rod Diameter: 3/8 inch

B. Storm Piping Schedule:

1. Flanges and unions may be used on aboveground pressure piping unless otherwise indicated.

2. Aboveground storm drainage piping 6” and smaller shall be any of the following:

a. Service class, hub and spigot cast-iron soil pipe and fittings; gaskets; and gasketed joints

b. Hubless, cast-iron soil pipe and fittings; CISPI, heavy-duty, hubless-piping couplings; and coupled joints

c. PVC pipe, PVC socket fittings, and solvent-cemented joints

d. Dissimilar Pipe-Material Couplings: Shielded, nonpressure transition couplings

3. Aboveground, storm drainage piping 8” and larger shall be any of the following:

a. Service class, hub and spigot cast-iron soil pipe and fittings; gaskets; and gasketed joints

b. Hubless, cast-iron soil pipe and fittings; CISPI, heavy-duty, hubless-piping couplings; and coupled joints

c. PVC pipe, PVC socket fittings, and solvent-cemented joints

d. Dissimilar Pipe-Material Couplings: Shielded, nonpressure transition couplings

4. Underground storm drainage piping 6” and smaller shall be any of the following:

    a. Service class, hub and spigot cast-iron soil pipe and fittings; gaskets; and gasketed joints

    b. Hubless, cast-iron soil pipe and fittings; CISPI, heavy-duty, cast-iron, hubless-piping couplings; and coupled joints

    c. PVC pipe, PVC socket fittings, and solvent-cemented joints

    d. Dissimilar Pipe-Material Couplings: Shielded, nonpressure transition couplings

5. Underground, storm drainage piping 8” and larger shall be any of the following:

    a. Service class, hub and spigot cast-iron soil pipe and fittings; gaskets; and gasketed joints

    b. Hubless, cast-iron soil pipe and fittings; CISPI, heavy-duty, cast-iron, hubless-piping couplings; and coupled joints

    c. PVC pipe, PVC socket fittings, and solvent-cemented joints

    d. Dissimilar Pipe-Material Couplings: Shielded, nonpressure transition couplings

6. Aboveground storm drainage force mains 2” and smaller shall be the following:

    a. Hard copper tube, copper pressure fittings, and soldered joints

7. Aboveground storm drainage force mains 2½” to 6” shall be any of the following:

    a. Grooved-end, galvanized-steel pipe; grooved-joint, galvanized-steel-pipe appurtenances; and grooved joints

    b. Fitting-type transition couplings if dissimilar pipe materials

8. Underground storm drainage force mains 4” and smaller shall be any of the following:

    a. Ductile-iron, mechanical-joint piping and mechanical joints

    b. Ductile-iron, push-on-joint piping and push-on joints

    c. Ductile-iron, grooved-joint piping and grooved joints

d. Fitting-type transition coupling for piping smaller than 1½”and pressure transition coupling for 1½” and larger if dissimilar pipe materials

9. Underground storm drainage force mains 5” and larger shall be any of the following:

a. Ductile-iron, mechanical-joint piping and mechanical joints

b. Ductile-iron, push-on-joint piping and push-on joints

c. Ductile-iron, grooved-joint piping and grooved joints

d. Pressure transition couplings if dissimilar pipe materials

END OF SECTION

SECTION 22 1006

PLUMBING PIPING SPECIALTIES

PART 1 - GENERAL

1.01 SECTION INCLUDES

A. Thermometers

B. Pressure Gauges

C. Unions

D. Flexible Connectors

E. Trap Primers

F. Aquastats

G. Drains

H. Cleanouts

I. Washing machine boxes and valves

J. Refrigerator valve and recessed box

K. Backwater valves

L. Backflow preventers

M. Double check valve assemblies

N. Water hammer arrestors

O. Mixing valves

1.02 REFERENCE STANDARDS

A. ASME A112.6.4 - Roof, Deck, and Balcony Drains; 2008 (Reaffirmed 2012)

B. ASSE 1011 - Performance Requirements for Hose Connection Vacuum Breakers; 2004, with Errata

C. ASSE 1012 - Performance Requirements for Backflow Preventers with an Intermediate Atmospheric Vent; 2009

D. ASSE 1013 - Performance Requirements for Reduced Pressure Principle Backflow Preventers and Reduced Pressure Principle Fire Protection Backflow Preventers; 2011

E. ASSE 1019 - Performance Requirements for Wall Hydrant with Backflow Protection and Freeze Resistance; 2011 (Reaffirmed 2016)

F. NSF 61 - Drinking Water System Components - Health Effects; 2017

G. NSF 372 - Drinking Water System Components - Lead Content; 2016

H. PDI-WH 201 - Water Hammer Arresters; 2010

1.03 SUBMITTALS

A. See Section 01 3000 - Administrative Requirements for submittal procedures

B. Product Data: Provide component sizes, rough-in requirements, service sizes, and finishes.

C. Manufacturer's Instructions: Indicate Manufacturer's Installation Instructions. Indicate assembly and support requirements.

D. Maintenance Data: Include installation instructions, spare parts lists, exploded assembly views, etc. for the following:

1. Trap primers

2. Thermostatic mixing valves

3. Backflow prevention devices

4. Aquastats

1.04 QUALITY ASSURANCE

A. Manufacturer Qualifications: Company specializing in manufacturing the Products specified in this section with not less than three years documented experience.

1.05 DELIVERY, STORAGE, AND HANDLING

A. Accept specialties on site in original factory packaging. Inspect for damage.

PART 2 - PRODUCTS

2.01 GENERAL REQUIREMENTS

A. Specialties in Potable Water Supply Systems: Provide products that comply with NSF 61 and NSF 372 for maximum lead content.

2.02 THERMOMETERS

A. Adjustable angle type, 304 stainless steel stem, 5" reading dial type, true anti-parallax-dial black numerals, markings in degrees F., stainless steel, double-strength glass viewing window. Provide sockets with extension necks where installed on insulated piping.

B. Thermometer Temperature Ranges:

1. Domestic Cold Water, range of 0 - 100 degrees F with 1 degree F increments

2. Domestic Hot Water, range of 30 - 180 degrees F with 2 degrees F increments

C. Manufacturers:

1. Ashcroft

2. March

3. Weiss

4. Tel-Tru

5. Winters

6. Taylor

2.03 PRESSURE GAUGES

A. Glycerin filled type, 2.5” reading dial with aluminum face and black numerals, markings in English units, 304 stainless steel case and acrylic lens. Provide each gauge with snubber and needle valve. Provide sockets with extension necks where installed on insulated piping.

B. Pressure Gauge Ranges:

1. Domestic Hot Water, range 0 - 160 PSI with numeral intervals of 20 PSI and 2 PSI inter-graduations

2. Domestic Cold Water, range 0 - 160 PSI with numeral intervals of 20 PSI and 2 PSI inter-graduations

3. Compressed Air, range 0 - 160 PSI with numeral intervals of 20 PSI and 2 PSI inter-graduations

C. Manufacturers:

1. Ashcroft

2. Marsh

3. Weiss

4. Tel-Tru

5. Winters

6. Taylor

2.04 UNIONS

A. Dielectric Waterways: Inert, non-corrosive thermoplastic lining with zinc electroplated casing, rated at 300 psi at 225 deg. F., conforming to NSF 61. Type and size to match piping.

1. Manufacturers:

a. Walter Vallett Company V-line

b. Clear Flow

B. Unions on Copper Pipe:

1. In 2" Pipe and Smaller: Wrought copper solder joint copper to copper union.

2. In 2.5" Pipe and Larger: Brass flange unions.

3. Manufacturers:

a. Watts

b. Nibco

c. Mueller

2.05 FLEXIBLE CONNECTORS

A. Water Pump Flexible Connectors: Flexible bronze braid, bronze hose, and copper ends rated to a working pressure of 470 psi at 70°F for a 1” flexible connector.

1. Manufacturers:

a. Metraflex

b. Flex Hose

c. Minnesota Flex

d. Resistoflex

2.06 TRAP PRIMERS

A. Provide an approved trap primer at each floor drain, funnel drain, shower drain, janitor mop sink, and floor sink.

1. Automatic Trap Primers (Water Pressure Drop Activated): Up to 4 traps may be served by a single trap primer and trap primer distribution system. Automatic primers shall be concealed in every case, located in pipe spaces or wall cavities; and where not accessible in a pipe space, provide an access panel. Elevate trap primer at increments of 12” per 20 linear foot of pipe run to trap.

   a. Manufacturers:

      1) JR Smith

      2) Sioux Chief Manufacturing

      3) Mifab

      4) Precision Plumbing Products

2. Automatic Trap Primers (Electronically Activated): Up to 30 trap primers may be served by a single electronic trap primer assembly. Electronic trap primer assemblies shall be provided preassembled with an atmospheric vacuum breaker, preset 24-hour clock, manual override switch/test button, calibrated manifold providing equal water distribution, and a recessed wall box with a locking stainless steel access panel. MC to coordinate electrical connections with EC.

   a. Manufacturers:

      1) JR Smith

      2) Precision Plumbing Products

3. Trap primer Tailpieces: 17 GA chrome plated. To be installed on lavatories and hand sinks only. One trap may be served by a single tailpiece trap primer. Provide with stainless steel braided primer hose and escutcheon.

   a. Manufacturers:

      1) JR Smith

      2) Watts

      3) Zurn

2.07 AQUASTATS

A. Automatic Timer Kit:

1. The timer kit shall be UL approved.

2. The timer kit shall be installed on the connection box of the pump.

3. The timer kit will be suitable for 115/120V, 60 HZ operation.

4. The timer shall provide automatic ON-OFF. It shall also have the option of providing manual ON-OFF control.

B. Aquastats:

1. The aquastat shall be UL approved.

2. The aquastat shall be connected to the lead wires in the connection box of the pump.

3. The aquastat will be suitable for 115/120V, 60 HZ operation.

4. The aquastat shall provide thermostat control to the circulator. It will turn OFF (open) at 120°F (48.9°C) water temperature and ON (closed) at 100°F (37.8°C) water temperature.

C. Automatic Timer Kit and Aquastat Combination:

1. The automatic timer kit and aquastat shall be combined to provide automatic time and temperature control to the pump.

2. When the automatic timer and the aquastat are used together, the pump will only circulate water when the ON time conditions are met and when the water temperature is low enough to cause the aquastat to switch ON.

D. Manufacturers:

1. Bell & Gossett

2. Honeywell

2.08 CLEANOUTS

A. Manufacturers:

1. Jay R. Smith Manufacturing Company

2. Josam Company

3. MIFAB, Inc: www.mifab.com/#sle

4. Watts

5. Zurn Industries, LLC

B. Cleanouts at Exterior Surfaced Areas:

1. Round cast nickel bronze access frame and non-skid cover.

C. Cleanouts at Interior Finished Floor Areas:

1. Lacquered cast iron body with anchor flange, reversible clamping collar, threaded top assembly, and round gasketed scored cover in service areas and round gasketed depressed cover to accept floor finish in finished floor areas.

D. Cleanouts at Interior Finished Wall Areas:

1. Line type with lacquered cast iron body and round epoxy coated gasketed cover, and round stainless-steel access cover secured with machine screw.

2.09 WASHING MACHINE BOXES AND VALVES

A. Box Manufacturers:

1. Guy Gray

2. Oatey Supply Chain Services, Inc

3. Acorn

B. Description: Plastic preformed rough-in box with brass long shank valves with wheel handles, socket for 2-inch waste, slip in finishing cover.

2.10 REFRIGERATOR VALVE AND RECESSED BOX

A. Box Manufacturers:

1. Guy Gray

2. Oatey Supply Chain Services, Inc

2.11 BACKWATER VALVES

A. Manufacturers:

1. Jay R. Smith Manufacturing Company

2. Zurn Industries, LLC

B. Cast Iron Back Water Valves: ASME A112.6.4; lacquered cast iron body and cover, brass valve, extension sleeve, and access cover

C. Plastic Back Water Valves: ABS body and valve, extension sleeve, and access cover

2.12 BACKFLOW PREVENTERS

A. Provide letter of certification to Owner.

B. Type and configuration shall conform to local authority requirements.

C. REDUCED PRESSURE BACKFLOW PREVENTORS

1. Manufacturers:

a. Conbraco Industries, Inc

b. Watts Regulator Company, a part of Watts Water Technologies

c. Zurn Industries, LLC

2. Reduced Pressure Backflow Preventers:

a. ASSE 1013; cast bronze body and stainless-steel springs; two independently operating, spring loaded check valves; diaphragm type differential pressure relief valve located between check valves; third check valve that opens under back pressure in case of diaphragm failure, and non-threaded vent outlet.

D. DOUBLE CHECK-VALVE ASSEMBLIES

1. Manufacturers:

a. Conbraco Industries, Inc

b. Watts Regulator Company, a part of Watts Water Technologies

c. Zurn Industries, LLC

2. Double Check Valve Assemblies:

a. ASSE 1012; Bronze body with corrosion resistant internal parts and stainless-steel springs; two independently operating check valves with intermediate atmospheric vent.

2.13 WATER HAMMER ARRESTORS

A. Manufacturers:

1. Jay R. Smith Manufacturing Company

2. Sioux Chief; 650 Series

3. Watts Regulator Company, a part of Watts Water Technologies: www.wattsregulator.com/#sle

4. Wade; WP5-100

5. Zurn Industries, LLC; 1250 XL

B. Water Hammer Arrestors:

1. Piston-type with sized in accordance with PDI-WH 201, sufficient volume of air to dissipate the calculated kinetic energy generated in the piping system

2. Arrestors shall be effective when installed at any angle.

3. Provide isolation valve for service.

4. Maximum working temperature of 250 degrees F

5. Maximum working pressure 350 PSIG

6. Performance per ANSI/ASSE 1010-2004 Standard

2.14 MIXING VALVES

A. Thermostatic Mixing Valves:

1. Manufacturers:

a. Leonard Valve Company

b. Bradley

c. Apollo Conbraco

d. Lawler

e. Powers

f. Acorn

g. Armstrong

2. Recirculation Station: Recirculation station shall consist of thermostatic mixing valve in combination with piping assembly, inlet/outlet shutoff valves, pressure/temperature gauges, circulation pump (see pump schedule), circuit setter balancing valve, etc. All components pre-assembled to enamel coated strut and tested by manufacturer.

3. Thermostatic Mixing Valves: The thermostatic water mixing valve (TMV) shall consist of a liquid-filled thermal motor control mechanism with a positive shut-off of hot water when cold water supply is lost. The TMV shall allow a restricted cold flow in the event of loss or interruption of the hot water supply. All flow is shut off in the event of thermostat failure. The TMV shall be constructed of bronze bodies with corrosion resistant components and shall be equipped with integral checkstops, thermometer, outlet temperature gauge, and removable strainers. The TMV shall control the temperature to within +/- 3 degrees from low flow to the maximum flow rate scheduled.

4. Electronic Mixing Valves: The mixing valve shall consist of an electronic actuated mixing valve. Self-balancing, daily self-cleaning maintenance sweep feature, holds +/- 2°F temperature accuracy, standard serviceable integral check valves on all models. Self-Diagnostic Digital electronic control box with LCD display, programmable temperature setpoints, simple setup/simple error coding and upon power failure, holds last set temperature to avoid thermal shock. Provide a 2-hour battery backup if called for on the equipment schedule.

5. Cabinet: 16-gauge, 0.0598 inch prime-coated steel, for recessed mounting with keyed lock.

B. Thermostatic Mixing Valves for Emergency Eyewashes, Showers, and Combination Eyewash/Showers:

1. Manufacturers:

   a. Bradley

   b. Apollo Conbraco

   c. Acorn

2. The mixing valve shall be manufactured specifically for emergency fixture applications and be compliant with ANSI 358-1.

3. The mixing valve shall have solid bimetal thermostat directly linked to valve porting to control the intake of hot and cold water and compensate for supply temperature and pressure fluctuations.

4. Provide a locking type temperature regulator to prevent accidental movement, set temperature at 80 degrees F.

5. The mixing valve shall close down on failure of cold-water supply.

6. Shall have internal cold-water bypass capable full flow upon failure of hot water supply.

7. Provide outlet dial thermometer, integral wall support, union angle check stops on inlets, and recessed or surface mounted cabinet with locking access panel.

8. Mixing valves for eyewashes shall be capable of 4 gpm, including cold water bypass. Mixing valves for showers and combination eyewash showers shall be capable of 20 gpm, including cold water bypass.

PART 3 - EXECUTION

3.01 INSTALLATION

A. Install in accordance with manufacturer's instructions.

B. Thermometers: Install thermometers and thermal wells in piping at locations indicated, and so as to be easily read.

C. Pressure Gauges: Install pressure gauges at each side of pressure reducing valves; and as indicated.

D. Unions: Install unions in pipe connections to control valves, coils, regulators, reducers, all equipment, and where it may be necessary to disconnect the equipment or piping for repairs or maintenance; and as indicated.

E. Install (1) piston type water hammer arrestor at each quick acting valve for branch supply lines up to 20’ in length serving plumbing fixture groups. Install water hammer arrestor between last two fixtures, for branch supply lines exceeding 20’ in length, serving plumbing fixture groups. Size per manufacturers instructions.

F. Thermostatic Mixing Valves: Install in accordance with installation detail and the manufacturer’s recommendations.

G. Extend cleanouts to finished floor or wall surface. Lubricate threaded cleanout plugs with mixture of graphite and linseed oil. Ensure clearance at cleanout for rodding of drainage system.

H. Encase exterior cleanouts in concrete flush with grade.

I. Install floor cleanouts at elevation to accommodate finished floor.

J. Install approved potable water protection devices on plumbing lines where contamination of domestic water may occur; on boiler feed water lines, janitor rooms, fire sprinkler systems, premise isolation, irrigation systems, flush valves, and interior and exterior hose bibbs.

K. Pipe relief from backflow preventer to nearest drain.

L. Install water hammer arrestors complete with accessible isolation valve on hot and cold-water supply piping to fast acting valves such as water closet flush valves, washer machines, etc.

M. Install an approved trap primer at each floor drain, funnel drain, shower drain, janitor mop sink, and floor sink.

N. For plumbing systems without flush valves, provide electronically activated trap primer or tailpiece trap primer.

END OF SECTION

SECTION 22 3000

PLUMBING EQUIPMENT

PART 1 - GENERAL

1.01 SECTION INCLUDES

A. Water Heaters

B. Packaged water heating systems

C. Domestic-water heat exchangers

D. Domestic hot water storage tanks

E. Diaphragm-type compression tanks

F. Acid neutralizer tanks

G. Grease traps

H. Grease interceptors

I. Oil water separators

J. Acid-effluent neutralizers

K. In-line circulator pumps

L. Pressure booster systems

M. Sump pumps

N. Sewage ejectors

O. Submersible sump pumps

P. Condensate removal pumps

1.02 RELATED REQUIREMENTS

A. Section 22 0548 - Vibration and Seismic Controls for Plumbing Piping and Equipment

B. Section 23 0513 - Common Motor Requirements for HVAC Equipment

C. Section 26 0583 - Wiring Connections: Electrical characteristics and wiring connections

1.03 REFERENCE STANDARDS

A. ABMA STD 9 - Load Ratings and Fatigue Life for Ball Bearings; 2015

B. ABMA STD 11 - Load Ratings and Fatigue Life for Roller Bearings; 2014

C. ANSI Z21.10.1 - Gas Water Heaters - Volume I - Storage Water Heaters with Input Ratings of 75,000 Btu per Hour or Less; 2014

D. ASME BPVC-VIII-1 - Boiler and Pressure Vessel Code, Section VIII, Division 1 - Rules for Construction of Pressure Vessels; 2017

E. NEMA 250 - Enclosures for Electrical Equipment (1000 Volts Maximum); 2014

F. NSF 372 - Drinking Water System Components - Lead Content; 2016

G. NSF 61 - Drinking Water System Components - Health Effects; 2017

H. UL 174 - Standard for Household Electric Storage Tank Water Heaters; Current Edition, Including All Revisions

I. UL 778 - Standard for Motor-Operated Water Pumps; Current Edition, Including All Revisions

1.04 SUBMITTALS

A. Product Data:

1. Provide dimensional drawings of water heaters indicating components and connections to other equipment and piping.

2. Indicate pump type, capacity, and power requirements.

3. Provide certified pump curves showing pump performance characteristics with pump and system operating point plotted. Include NPSH curve when applicable.

4. Provide electrical characteristics and connection requirements.

B. Project Record Documents: Record actual locations of components.

C. Operation and Maintenance Data: Include operation, maintenance, and inspection data, replacement part numbers and availability, and service depot location and telephone number. Include pump performance curves with pump.

D. Warranty Documentation: Submit manufacturer warranty and ensure that forms have been completed in Owner's name and registered with manufacturer.

1.05 QUALITY ASSURANCE

A. Certifications:

1. Water Heaters: NSF approved

2. Gas Water Heaters: Certified by CSA International to ANSI Z21.10.1, as applicable, in addition to requirements specified elsewhere

3. Electric Water Heaters: UL listed and labeled to UL 174

4. Water Tanks: UL listed units, for units with a storage tank of less than 120 gallons and gas input of less than 200,000 Btu per hour. All others to be ASME labeled to ASME BPVC-VIII-1

5. Products Requiring Electrical Connection: Listed and classified by Underwriters Laboratories Inc., as suitable for the purpose specified and indicated

B. Identification: Provide pumps with manufacturer's name, model number, and rating/capacity identified by permanently attached label.

C. Performance: Ensure pumps operate at specified system fluid temperatures without vapor binding and cavitation, are non-overloading in parallel or individual operation, and operate within 25 percent of midpoint of published maximum efficiency curve.

1.06 DELIVERY, STORAGE, AND HANDLING

A. Provide temporary inlet and outlet caps. Maintain caps in place until installation.

1.07 WARRANTY

A. Provide five-year manufacturer warranty for domestic water storage tanks. Provide one year manufacturer warranty for domestic water heater parts.

PART 2 - PRODUCTS

2.01 WATER HEATERS

A. Manufacturers:

1. A.O. Smith Water Products Co

2. Bock Water Heaters, Inc

3. Rheem

4. State

5. Lochinvar

6. Bradford White

7. PVI

8. Heat Transfer Products

B. Commercial Gas Fired:

1. Type: Automatic, natural gas-fired, vertical storage

2. Performance:

a. Maximum Working Pressure: 150 psig

3. Tank: Glass lined welded steel or stainless steel; multiple flue passages, 4-inch diameter inspection port, thermally insulated with minimum 2 inches glass fiber, encased in corrosion-resistant steel jacket; baked-on enamel finish; floor shield and legs.

4. Accessories:

a. Water Connections: Brass

b. Dip Tube: Brass

c. Drain valve

d. Anode: Magnesium

e. Temperature and Pressure Relief Valve: ASME labeled

5. Certified For The Following Applications:

a. Automatic storage water heater

b. Automatic circulating tank water heater

c. For operation at 180 degrees F

d. For operation on combustible floors

6. Controls: Automatic water thermostat with temperature range adjustable from 120 to 180 degrees F, automatic reset high temperature limiting thermostat factory set at 195 degrees F, gas pressure regulator, multi-ribbon or tubular burner, 100 percent safety shut-off pilot and thermocouple, flue baffle, and draft hood.

7. The water storage tank shall be lined with insulation to an equivalent of R-17.

8. Listed and approved for zero clearance to combustible surfaces

9. Condensing type, gas-fired, high efficiency type water heaters shall be a direct venting system to include CPVC flue vent and CPVC combustion air inlet sized per manufacturers recommendations. Follow manufacturer's recommended installation procedures and clearances. Support CPVC flue and inlets with floor mount pipe supports, and support to structure with pipe clamps.

C. Residential Electric:

1. Type: Automatic, electric, vertical storage

2. Performance:

a. Maximum Working Pressure: 150 psig

3. Tank: Glass lined welded steel, thermally insulated with one-inch-thick glass fiber; encased in corrosion-resistant steel jacket; baked-on enamel finish.

4. Controls: Automatic water thermostat with externally adjustable temperature range from 120 to 170 degrees F, flanged or screw-in nichrome elements, enclosed controls and electrical junction box.

5. Accessories:

a. Water Connections: Brass

b. Dip Tube: Brass

c. Drain valve

d. Anode: Magnesium

e. Temperature and Pressure Relief Valve: ASME labeled

D. Commercial Electric:

1. Type: Factory-assembled and wired, electric, vertical storage

2. Performance:

a. Maximum Working Pressure: 150 psig

3. Controls: Automatic immersion water thermostat; externally adjustable temperature range from 60 to 180 degrees F, flanged or screw-in nichrome elements, high temperature limit thermostat.

4. Accessories:

   a. Water Connections: Brass

   b. Dip Tube: Brass

   c. Drain valve

   d. Anode: Magnesium

   e. Temperature and Pressure Relief Valve: ASME labeled.

5. Tank: Welded steel ASME labeled pressure vessel; glass lining, mounted on steel channel base with lifting lugs, insulated with 2-inch glass fiber; enclosed with 16-gage, 0.0598-inch steel jacket; baked enamel finish.

6. Controls: Ventilated control cabinet, factory-wired with solid state progressive sequencing step controller, fuses, magnetic contactors, control transformer, pilot lights indicating main power and heating steps, control circuit toggle switch, electronic low-water (probe-type) cut-off, high temperature limit thermostat, flush-mounted temperature and pressure gauges.

7. Heating Elements: Flange-mounted immersion elements; individual elements sheathed with Incoloy corrosion-resistant metal alloy, rated less than 75 W/sq in.

2.02 PACKAGED WATER HEATING SYSTEMS

A. Manufacturers:

   1. Bell & Gossett, a xylem brand

   2. Lochinvar LLC

B. Boiler:

   1. Type: Gas-fired water tube boiler, with copper finned tube heat exchanger, steel jacket with glass fiber insulation.

   2. Boiler Trim: Gas burner, thermometer and pressure gauge, immersion thermostats for operating and high limit protection, 100 percent safety shut-off electric gas valve with transformer, electronic safety pilot and pilot burner, gas pressure regulator, manual gas shut-off, low water cut off, ASME rated temperature and pressure relief valve, coil relief valve, automatic boiler fill and expansion tank, draft inverter.

C. Vertical Storage Tank:

1. Working Pressure: 150 psi ASME labeled

2. Lining: 15 mils thick epoxy lining extended through flanges and couplings

3. Support: Two welded tank saddles not less than 4 inches wide by 1/4 inch thick, mounted on 2-inch pipe stand with minimum four cross braced legs; sheet teflon isolation strip between tank and saddle; dielectric unions between tank and piping system.

4. Insulation: 3-inch glass fiber insulation with steel jacket

D. Pump:

1. Type: In-line circulation pump mounted on boiler, controlled by tank mounted immersion thermostat. See Inline Circulator Pumps below for specifications.

E. Thermostatic Valve: Three-way, self-contained, full line size, bronze body 1/2 to 2 inches size, iron body 2-1/2 inches and over, set at 140 degrees F

2.03 DOMESTIC HOT WATER STORAGE TANKS

A. Manufacturers:

1. A.O. Smith Water Products Co

2. Bock Water Heaters, Inc

B. Tank: Welded steel, ASME labeled for working pressure of 125 psig, steel support saddles, tappings for accessories, threaded connections of stainless steel, access manhole

C. Lining: 0.015 inches epoxy continued into flanged connections

D. Openings: Up to 3 inches, copper-silicone threaded; over 4 inches, flanged; flanged collar for heat exchanger; manway fitting

E. Accessories: Tank drain, water inlet and outlet, thermometer range of 40 to 200 degrees F, ASME pressure relief valve suitable for maximum working pressure

2.04 DIAPHRAGM-TYPE COMPRESSION TANKS

A. Manufacturers:

1. Amtrol Inc

2. Bell & Gossett, a xylem brand

3. Taco, Inc

4. Wilkins

5. Armstrong

B. Construction: Welded steel, tested and stamped in accordance with ASME BPVC-VIII-1; supplied with National Board Form U-1, rated for working pressure of 125 psig, with flexible EPDM diaphragm sealed into tank, and steel legs or saddles

C. Accessories: Pressure gage and air-charging fitting, tank drain; precharge to 55 psig

2.05 ACID-EFFLUENT NEUTRALIZERS

A. Manufacturers:

1. Enfield

2. Fuseseal

3. Town and Country

4. Zurn

5. Orion

B. Performance:

1. Maximum Low pH Water Flow Rate: _____ gpm

2. Media consists of calcite, limestone, or _____ mineral media

C. Acid Neutralizer Tank: Acid neutralization tank shall be manufactured from high density polyethylene. Tank shall be seamless construction with flange top and bolt down cover.

2.06 GREASE TRAP (HYDROMECHANICAL)

A. The grease trap shall be manufactured with acid resistant coated interior and exterior or of acid resistant stainless steel.

B. The grease trap shall have a PDI rating for maximum gallon per minute flow (GPM) and grease capacity as stated on the schedule.

C. The grease trap shall be furnished complete with a gpm flow control fitting.

2.07 GREASE INTERCEPTOR (GRAVITY)

A. The grease interceptor shall be manufactured from non-corrosive material or concrete coated with a noncorrosive coating (epoxy or other). The interceptor shall be rated for its intended use of burial in the ground or free standing and have traffic rated lid or lids.

B. Provide adjustable risers to provide an on-grade lid.

C. The grease interceptor shall be rated for minimum volume as listed on the schedule.

D. Manufacturers:

1. Oldcastle Precast
2. Hanson Concrete
3. Shope Concrete Products
4. Endura XL
5. Schier HDPE
6. Green Turtle HDPE
7. MiFab HDPE

2.08 OIL WATER SEPARATOR

A. The oil water separator shall be manufactured from non-corrosive oil resistant material or coated with a non-corrosive oil resistant coating. The separator shall be rated for its intended use of burial in the ground or free standing and have traffic rated lid or lids.

B. The oil water separator shall be rated for the maximum flow in gallon per minute flow.

C. Approved Manufacturers:

1. Oldcastle Precast
2. Hanson Concrete
3. Shope Concrete Products

2.09 UV STERILIZERS

A. Construction:

1. Reactor Chamber Material: 316L stainless steel or 304 stainless steel

2. Lamp type consists of low-pressure mercury

B. Controls: Open loop current control with detachable power cord, audible alarm, and power on indicators.

2.10 IN-LINE CIRCULATOR PUMPS, BRONZE

A. Manufacturers:

1. Armstrong Fluid Technology

2. Bell & Gossett, a xylem brand

3. Taco

4. Grundfos

B. Casing: Bronze, rated for 125 psig working pressure, with stainless steel rotor assembly

C. Impeller: Bronze

D. Shaft: Alloy steel with integral thrust collar and two oil lubricated bronze sleeve bearings

E. Seal: Carbon rotating against a stationary ceramic seat suitable for continuous operation at 225 degrees F

F. Drive: Flexible coupling

G. Pump must be capable of being serviced without disturbing piping connections.

H. Pump shall be water lubricated type for horizontal or vertical installation.

I. Each pump shall be factory tested. It shall then be thoroughly cleaned and painted with at least one coat of high-grade machinery enamel prior to shipment.

J. Entire pump to be NSF 372 certified

K. See Section 23 05 13 - Common Motor Requirements for HVAC Equipment if equipment schedule calls out for any variable drive or ECM requirements.

2.11 IN-LINE CIRCULATOR PUMPS, STAINLESS STEEL

A. Manufacturers:

1. Armstrong Fluid Technology
2. Bell & Gossett, a xylem brand
3. Taco
4. Grundfos

B. Casing: Stainless steel, rated for 125 psig working pressure

C. Impeller: Polyphenylene ether/high impact polystyrene blend or stainless steel

D. Shaft and Bearings: Ceramic or stainless steel

E. Seal: Carbon rotating against a stationary ceramic seat suitable for continuous operation at 225 degrees F

F. Pump must be capable of being serviced without disturbing piping connections.

G. Pump shall be water lubricated type for horizontal or vertical installation.

H. Each pump shall be factory tested. It shall then be thoroughly cleaned and painted with at least one coat of high-grade machinery enamel prior to shipment.

I. Entire pump to be NSF 372 certified

J. See Section 23 0513 - Common Motor Requirements for HVAC Equipment if equipment schedule calls out for any variable drive or ECM requirements

2.12 PRESSURE BOOSTER SYSTEMS

A. Manufacturers:

1. Armstrong Fluid Technology
2. Bell & Gossett, a xylem brand
3. Canariis
4. Grundfos

B. System: Packaged with two pumps, factory assembled, tested, and adjusted; shipped to site as integral unit; consisting of pumps, valves, and stainless-steel piping, with control panel assembled on fabricated steel base with structural steel framework. The entire system shall be NSF 61 approved for potable use.

C. Controls and Instruments: The system shall include a UL labeled control panel located in NEMA 250 Type 1 general purpose enclosure with main disconnect interlocked with door, fused circuit for each motor, variable frequency drives, control circuit transformer with fuse protection, selector switch for each pump, low limit pressure switch, low pressure alarm light, running lights, current sensing devices, minimum run timers, manual alternation, and suction and discharge pressure gages.

D. See Section 23 0513 - Common Motor Requirements for HVAC Equipment if equipment schedule calls out for any variable drive or ECM requirements.

E. The control panel shall have a factory programmed; programmable controller capable of being field programmed. All timer settings will be non-adjustable except by field programming. Programmable controller's program shall be changeable by either field programming or by factory programmed modules sent to the field for installation.

F. The system and all pertinent components shall be cold water rated for working pressure of 125 psi and shall be hydrostatically tested in accordance with the Hydraulic Institute Standards for centrifugal pumps.

G. Lead Pump: Operate continuously with lag pump operating on system demand. Should lead pump fail to operate, next pump in sequence shall start automatically.

H. Time Delay Relay: Prevent lag pump short cycling on fluctuating demands.

I. Thermal Bleed Circuit with Solenoid Valve: Prevent overheating during low demand.

J. Low Pressure Control: Stop pump operation if incoming water pressure drops to atmospheric.

K. Pump Switch: Permit manual or automatic operation.

L. Valving: Each pump outlet combination pressure reducing and check valve to maintain constant system pressure. Provide gate or butterfly valves on suction and discharge of each pump. Provide a non-slam check valve on each pump discharge. Individual pumps may be serviced with the system in operation.

M. Provide a hydropneumatic pressure tank, designed to ASME code and stamped, designed to appropriate psi working pressure (mounted and piped at the factory).

2.13 SUMP PUMPS

A. Type: Vertical centrifugal, direct connected, simplex arrangement

B. Casing: Cast iron volute with radial clearance around impeller, inlet strainer, slide away couplings

C. Impeller: Cast iron; open non-clog, keyed to corrosion resistant alloy steel shaft

D. Support: Cast iron pedestal motor support on steel floor plate with gas tight gaskets

E. Bearings: Forced grease lubricated bronze sleeve spaced maximum 48 inches and grease lubricated ball thrust at floor plate

F. Drive: Flexible coupling to vertical, solid shaft ball bearing electric motor

G. Sump: Steel cover plate with steel curb frame for grouting into concrete sump with inspection opening and cover, and alarm fittings

H. Controls (Simplex): Float switch with float rod, stops, and corrosion resistant float, and separate pressure switch high level alarm with transformer, alarm bell, and stand-pipe

I. See Section 23 0513 - Common Motor Requirements for HVAC Equipment if equipment schedule calls out for any variable drive or ECM requirements

2.14 ELEVATOR SUMP PUMPS

A. Manufacturers:

1. Stancor Pump Company

2. Weil

B. Type: Vertical centrifugal, direct connected, simplex arrangement

C. Casing: Cast iron volute with radial clearance around impeller, inlet strainer, slide away couplings

D. Impeller: Cast iron; open non-clog, keyed to corrosion resistant alloy steel shaft

E. Bearings: Ball bearings

F. Oil Sensing Controls:

1. Oil Sensing System shall be capable of sensing oil floating on the top of the water, emulsified in solution or solid oil and prevent the pump from discharging this oil into the sewer or storm drain. The pump and oil sensor technology control system must comply with TDLR elevator rules and ASME A 17.1 Section 2.2.2.5 (2007) standard.

2. The control system shall provide a local audible alarm with silence switch. Provide individual dry contacts for warning of conditions A, & B, C D, & E and panel mounted audible alarm with LED indicator lights for Power, Oil Detected and High-water level. The dry contacts shall be normally open and shall activate under the following conditions, A) the presence of oil in the sump, B) high liquid level in the sump, C) high amps or a locked rotor motor condition, D) loss of electrical power to the panel, E) pump activation/ pump run. A dry contact closure that makes only in the event of a high liquid level condition and/or oil detected in the pit shall not be considered equal and will not be accepted.

3. The control system shall be built and tested to meet UL508 standards and shall be housed in a gasketed NEMA 4X electrical enclosure with a wiring terminal strip for field wiring to the J-Box in the hoist way. The control panel shall have a combination manual reset/push to test switch for motor overload with both automatic, manual reset and control diagnostics. The control system must be factory set for automatic overload restart.

4. The factory mounted and adjusted oil sensor-level probe shall be set no higher than 4" from the bottom of the pit. The factory mounted main float switch will automatically start the pump on a level increase in the sump pit fluid level. When the water or fluid level drops below the oil sensor probe tip the pump will automatically turn off. The control panel shall provide a one (1) second time delay after the liquid level drops below the oil sensor probe tip, leaving about two inches of water in the pit. If the oil sensor measures a higher resistance than its set point, the oil LED, audible alarm and remote alarm relay are to be energized.

G. Controls Without Oil Sensing: Motor control panel containing across-the-line electric motor starters with ambient compensated quick trip overloads in each phase with manual trip button and reset button, circuit breaker, control transformer, electro mechanical alternator, hand-off-automatic selector switches, pilot lights, high water alarm pilot light, reset button, and alarm horn. Provide mercury switch liquid level controls, steel shell switch encased in polyurethane foam with cast iron weight for pump on (each pump), pump off (common), and alarm. Provide an oil resistant 6-foot cord and plug with three-prong connector for connection to electric wiring system including grounding connector.

2.15 SUBMERSIBLE SUMP PUMPS

A. Manufacturers:

1. Armstrong Fluid Technology

2. Goulds Water Technology, a xylem brand

3. Zoeller Company

B. Type: Completely submersible, vertical, centrifugal

C. Casing: Cast iron pump body and oil filled motor chamber

D. Impeller: Cast iron; open non-clog, stainless steel shaft

E. Bearings: Ball bearings

F. Sump: Fiberglass basin with steel cover plate. See plans for size

G. Accessories: Oil resistant 6-foot cord and plug with three-prong connector for connection to electric wiring system including grounding connector

H. Servicing: Slide-away coupling consisting of discharge elbow secure to sump floor, movable bracket, guide pipe system, lifting chain and chain hooks

I. Controls: Motor control panel containing across-the-line electric motor starters with ambient compensated quick trip overloads in each phase with manual trip button and reset button, circuit breaker, control transformer, electro mechanical alternator, hand-off-automatic selector switches, pilot lights, high water alarm pilot light, reset button, and alarm horn. Provide mercury switch liquid level controls, steel shell switch encased in polyurethane foam with cast iron weight for pump on (each pump), pump off (common), and alarm.

J. See Section 23 0513 - Common Motor Requirements for HVAC Equipment if equipment schedule calls out for any variable drive or ECM requirements.

2.16 CONDENSATE REMOVAL PUMPS

A. Manufacturers:

1. Franklin Electric Company

2. Liberty Pumps Inc

3. Little Giant

4. Hartell

5. Saniflo

B. Construction: Commercial grade, nonferrous pump with stainless steel shaft, integral discharge check valve, integral float switch, safety switch, thermoplastic reservoir, motor assembly, and power cord with ground.

C. Safety: UL 778

2.17 SANITARY SEWAGE PUMPS

A. Centrifugal Solids Handling:

1. Manufacturers:

   a. Buffalo Pump, a subsidiary of Ampco-Pittsburgh Corporation

   b. Flowserve Corporation

   c. Hayward Gordon ULC

2. General: Non-clogging centrifugal type suitable for pumping solids up to 3 inches in diameter without internal interstices that can collect stringy materials and solids resulting in clogging.

3. Casing:

   a. Capable of withstanding operating pressures 50 percent greater than the maximum operating pressure

   b. Plugged and tapped holes for draining and venting pump

   c. Volute to consist of smooth passages

   d. Configuration to permit removal of impeller without disturbing discharge and suction connections

   e. Handhole to allow cleaning and inspection of pump interior

   f. Lifting eyes to facilitate handling of pump

4. Impeller:

   a. Design to consist of smooth passages to prevent clogging and pass fibrous or stringy material.

   b. Securely keyed to shaft with locking arrangement preventing loosening by torque from either forward or reverse direction.

   c. Balance statically, dynamically, and hydraulically within the operating range and to the first critical speed at 150 percent of the maximum operating speed.

5. Wearing Rings:

   a. Provide renewable wearing rings on the casing and impeller with wearing surfaces normal to the axis of rotation.

   b. Construction: Cast iron.

c. Factory designed for simple maintenance and secured to prevent rotation.

d. In lieu of wearing rings on impeller and casing, replaceable steel wear plates fastened to casing may be used.

6. Pump Shaft:

a. Provide with adequate size and strength to transmit full driver horsepower with liberal safety factor.

b. Fabricate from stainless steel.

7. Pump Shaft Sleeve:

a. Fabricate from stainless steel.

b. Seal joint between shaft and sleeve to prevent leakage.

c. Stuffing Box:

1) Factory designed for minimum 5 rings of packing with removable split type glands.

2) Fabricate from same material as casing and water sealed.

8. Mechanical Seal System:

a. Furnish single seals to seal pump shaft against leakage.

b. Each seal to be held in place by its own spring system, supplemented by external liquid pressures.

c. System to be readily removable from the shaft.

9. Bearings:

a. Provide ball type designed to handle all thrust loads in either direction.

b. Furnish with a L-10 life of minimum 50,000 hours as required by ABMA 9 or ABMA 11.

c. Pumps depending only on hydraulic balance and thrust are not acceptable.

10. Lubrication:

    a. Bearing:

        1) Grease Lubricated:

            a) Provide grease fitting of the type that prevents over-lubrication and the building up of pressure injurious to the bearings.

            b) Provide grease tubing if fitting is not readily accessible.

11. Pump Support:

    a. Vertical Shaft Centrifugal Pumps: Separate bases for pump and support.

12. Coupling:

    a. Provide heavy duty, flexible type, locked to the shaft.

    b. Disconnection of the coupling possible without removing the driver half or the pump half of the coupling from the shaft.

    c. Universal type couplings for extended shaft of vertical centrifugal pumps are acceptable.

13. See Section 23 0513 - Common Motor Requirements for HVAC Equipment if equipment schedule calls out for any variable drive or ECM requirements.

PART 3 - EXECUTION

3.01 INSTALLATION

A. Install plumbing equipment in accordance with manufacturer's instructions, as required by code, and complying with conditions of certification, if any.

B. Coordinate with plumbing piping and related fuel piping work to achieve operating system.

C. Domestic Water Heaters:

    1. Water heaters shall each have a relief valve sized to match heat input and set to relieve at 120 psi.

    2. Install temperature-pressure relief valve on hot water heater and pipe discharge directly above funnel of floor drain or as shown on plans.

3. If system has a hot water recirculating line and/or check valve in the cold-water supply to tank, provide a pre-charged, type expansion tank. Size per schedule or Hot Water Tank Piping Diagram. Provide ASME rated expansion tank on water heaters that are ASME rated.

4. Electric water heaters installed in unconditioned space or on a concrete floor shall be placed on incompressible insulation having a minimum insulation value of R-10.

5. On all water heaters, provide and install seismic bracing per SMACNA zone 3.

6. For water heaters larger than 199 MBH and water heater boilers of any size, contact boiler inspector for preliminary layout approval prior to final piping. Ensure installation meets all manufacturers required clearances as well as local code (WAC and L&I).

7. Provide and install brass fittings between water heater and piping connections. Dielectric fitting connections are not acceptable.

8. Install condensate drain to nearest floor sink, floor drain, or mop sink or as indicated on the plans.

9. Install flue and combustion air intake per manufacturer's recommendations and not to exceed water heater listed equivalent lengths.

10. High efficiency, gas-fired water heaters shall have the start-up provided by a factory authorized representative.

D. Domestic Water Storage Tanks:

1. Provide steel pipe support, independent of building structural framing members.

2. Clean and flush prior to delivery to site. Seal until pipe connections are made.

E. Pumps:

1. Ensure pumps operate at specified system fluid temperatures without vapor binding and cavitation, are non-overloading in parallel or individual operation, and operate within 25 percent of midpoint of published maximum efficiency curve.

2. For domestic booster pumps: Provide field start-up service and training by pump manufacturer's trained representative.

3. For elevator sump pumps: Coordinate installation and sump depth with the supplied elevator vendor for compliance with L&I requirements prior to installation of underground waste piping and ordering or equipment.

F. Grease Traps, Grease Interceptors, and Oil Water Separators:

1. Install grease traps, grease interceptors, and oil/water separators to allow access for lid removal and servicing.

2. For exterior applications, provide lid extenders as required to match grade.

END OF SECTION

SECTION 22 4000

PLUMBING FIXTURES

PART 1 - GENERAL

1.01 SECTION INCLUDES

A. Flush valve water closets

B. Tank type water closets

C. Dual flush water closets

D. Bidets

E. Wall hung urinals

F. Lavatories

G. Wall-hung, solid surface, multistation lavatory units

H. Wall-hung, multistation wash fountains

I. Sinks

J. Under-lavatory pipe supply covers

K. Bathtubs and showers

L. Shower receptors

M. Showers

N. Eye wash fountains

O. Indoor drinking fountains

P. Electric water coolers

Q. Service sinks

R. Emergency showers

S. Floor Drains

T. Floor Sinks

U. Hot Water Dispenser

V. Hydrants

W. Hose Bibbs

1.02 REFERENCE STANDARDS

A. ADA Standards - Americans with Disabilities Act (ADA) Standards for Accessible Design; 2010

B. ASTM D3222 - Standard Specification for Unmodified Poly(Vinylidene Fluoride) (PVDF) Molding Extrusion and Coating Materials; 2005 (Reapproved 2015)

C. ASHRAE Std 18 - Methods of Testing for Rating Drinking-Water Coolers with Self-Contained Mechanical Refrigeration; 2013

D. ASME A112.6.1M - Supports for Off-the-Floor Plumbing Fixtures for Public Use; 1997 (Reaffirmed 2017)

E. ASME A112.18.1 - Plumbing Supply Fittings; 2012

F. ASME A112.19.2 - Ceramic Plumbing Fixtures; 2013

G. ASME A112.19.4M - Porcelain Enameled Formed Steel Plumbing Fixtures; 1994 (R2009)

H. ASME A112.19.14 - Six Liter Water Closets Equipped with Dual Flushing Device; 2013

I. ASSE 1014 - Performance Requirements for Backflow Prevention Devices for Hand-Held Showers; 2005

J. ASSE 1070 - Performance Requirements for Water Temperature Limiting Devices; 2015

K. ASTM C177 - Standard Test Method for Steady-State Heat Flux Measurements and Thermal Transmission Properties by Means of the Guarded-Hot-Plate Apparatus; 2013

L. ASTM C1822 - Standard Specification for Insulating Covers on Accessible Lavatory Piping; 2015

M. ASTM E84 - Standard Test Method for Surface Burning Characteristics of Building Materials; 2017

N. ASTM G21 - Standard Practice for Determining Resistance of Synthetic Polymeric Materials to Fungi; 2015

O. ISFA 2-01 - Classification and Standards for Solid Surfacing Material; 2013

P. NEMA LD 3 - High-Pressure Decorative Laminates; 2005

Q. NSF 61 - Drinking Water System Components - Health Effects; 2017

R. NSF 372 - Drinking Water System Components - Lead Content; 2016

1.03 SUBMITTALS

A. Product Data: Provide catalog illustrations of fixtures, sizes, rough-in dimensions, utility sizes, trim, and finishes.

B. Manufacturer's Instructions: Indicate installation methods and procedures.

C. Maintenance Data: Include fixture trim exploded view and replacement parts lists.

D. Warranty: Submit manufacturer warranty and ensure forms have been completed in Owner's name and registered with manufacturer.

1.04 QUALITY ASSURANCE

A. Manufacturer Qualifications: Company specializing in manufacturing the type of products specified in this section, with minimum three years of documented experience.

1.05 DELIVERY, STORAGE, AND HANDLING

A. Accept fixtures on site in factory packaging. Inspect for damage.

B. Protect installed fixtures from damage by securing areas and by leaving factory packaging in place to protect fixtures and prevent use.

1.06 WARRANTY

A. Provide five-year manufacturer warranty for electric water coolers.

PART 2 - PRODUCTS

2.01 GENERAL REQUIREMENTS

A. Potable Water Systems: Provide plumbing fittings and faucets that comply with NSF 61 and NSF 372 for maximum lead content; label pipe and fittings.

2.02 FLUSH VALVE WATER CLOSETS

A. Water Closets: Vitreous china, ASME A112.19.2, Wall hung or floor mounted as noted on Equipment Schedule, siphon jet flush action, china bolt caps.

1. Bowl: ASME A112.19.2; As noted on Architectural elevations high with elongated rim

2. Flush Valve: Exposed (top spud)

3. Handle Height: 44 inches or less

4. Outlet Size: 2 inches

5. Color: White

6. Assemblies need to have a current Maximum performance (MaP) rating of 800 or more and be listed as a WaterSense approved fixture.

7. Manufacturers:

   a. American Standard, Inc

   b. Kohler Company

   c. Zurn Industries, Inc

   d. Mansfield

   e. Sloan

   f. Toto

B. Flush Valves: ASME A112.18.1, diaphragm type, complete with vacuum breaker stops and accessories

1. Provide manual or sensor flush valve as indicated on the equipment schedule.

2. Sensor-Operated Type: Solenoid operator, hard wired or battery powered as noted on Equipment Schedule, infrared sensor and over-ride push button.

3. Exposed Type: Chrome plated, escutcheon, integral screwdriver stop

4. Handle placed on turn-around side for ADA applications.

5. Manufacturers:

   a. American Standard, Inc

   b. Delany Products

   c. Sloan Valve Company

   d. Zurn Industries, Inc

   e. Geberit

   f. Toto

g. Moen

C. Seats:

1. Manufacturers:

a. American Standard, Inc: www.americanstandard-us.com/#sle

b. Bemis Manufacturing Company

c. Church Seat Company

d. Zurn Industries, Inc

2. Solid white plastic, open front, extended back, self-sustaining hinge, brass bolts, without cover

D. Water Closet Carriers:

1. Manufacturers:

a. JOSAM Company

b. Zurn Industries, Inc

c. J.R. Smith

d. Wade

e. Watts

2. ASME A112.6.1M; adjustable cast iron frame, integral drain hub and vent, adjustable spud, lugs for floor and wall attachment, threaded fixture studs with nuts and washers. Provide heavy duty carriers (500 pound rated) as a minimum unless specifically called out as light duty carriers on the plans. Provide extra heavy-duty carriers (750 pound rated or greater) as noted on the plans.

2.03 TANK TYPE WATER CLOSETS

A. Tank Type Water Closet Manufacturers:

1. American Standard, Inc

2. Kohler Company

3. Zurn Industries, Inc

4. Sloan

5. Mansfield

6. Toto

B. Bowl: ASME A112.19.2; floor mounted, vitreous china reverse trap, close-coupled closet combination with elongated rim, insulated vitreous china closet tank with fittings and lever flushing valve, bolt caps

1. Water Consumption: Maximum 1.28 gallons per flush

C. Seat Manufacturers:

1. American Standard, Inc

2. Bemis Manufacturing Company

3. Church Seat Company

D. Seat: Solid white plastic, open front, extended back, less cover, complete with self-sustaining hinge

E. Handle Height: 44 inches or less. Handle placed on turn-around side for ADA applications

F. Assemblies need to have a current Maximum performance (MaP) rating of 800 or more and be listed as a WaterSense approved fixture.

2.04 DUAL FLUSH WATER CLOSETS

A. ASME A112.19.14; high efficiency and low consumption, vitreous china, dual flush, tank type

1. Bowl: Elongated

2. Rough In: 12 inches

3. Seat: Manufacturer's standard or recommended elongated closed front seat with lid

4. Color: White

2.05 WALL HUNG URINALS

A. Wall Hung Urinal Manufacturers:

1. American Standard, Inc

2. Kohler Company: www.kohler.com/#sle

3. Zurn Industries, Inc; EcoVantage Z5798 High-Efficiency Urinal System

4. Mansfield

5. Sloan

6. Toto

B. Urinals: Vitreous china, ASME A112.19.2, wall hung with side shields and concealed carrier.

1. Flush Volume: 0.125 gallons, maximum

2. Flush Style: Washout

3. Flush Valve: Exposed (top spud)

4. Trap: Integral

5. Removable stainless-steel strainer

6. Supply Size: 3/4 inch

7. Outlet Size: 1-1/2 inches

C. Flush Valves: ASME A112.18.1, diaphragm type, complete with vacuum breaker stops and accessories

1. Provide manual or sensor flush valve as indicated on the equipment schedule.

2. Sensor-Operated Type: Solenoid operator, Hard wired or battery powered as noted on Equipment Schedule, infrared sensor and over-ride push button

3. Exposed Type: Chrome plated, escutcheon, integral screwdriver stop

4. Manufacturers:

a. American Standard, Inc

b. Delany Products

c. Sloan Valve Company

d. Zurn Industries, Inc

e. Geberit

f. Toto

g. Moen

D. Carriers:

1. Manufacturers:

a. JOSAM Company

b. Zurn Industries, Inc

c. J.R. Smith

d. Wade

e. Watts

2. ASME A112.6.1M; cast iron and steel frame with tubular legs, lugs for floor and wall attachment, threaded fixture studs for fixture hanger, bearing studs

2.06 LAVATORIES

A. Lavatory Manufacturers:

1. American Standard, Inc

2. Kohler Company

3. Zurn Industries, Inc

4. Mansfield

5. Sloan

6. Toto

B. Vitreous China Wall Hung Basin: ASME A112.19.2; vitreous china wall hung lavatory, Size as indicated on Equipment Schedule minimum, with 4-inch-high back, rectangular basin with splash lip, front overflow, and soap depression.

1. Drilling Centers: 4 inches

C. Steel Counter Top Basin: ASME A112.19.4M; porcelain on steel self-rimming counter top lavatory, Size as indicated on Equipment Schedule with drillings on 4 inch centers, front overflow, soap depression, seal of putty, caulking, or concealed vinyl gasket

D. Vitreous China Counter Top Basin: ASME A112.19.2; vitreous china self-rimming counter top lavatory, Size as indicated on Equipment Schedule with drillings on 4 inch centers, front overflow, soap depression, seal of putty, caulking, or concealed vinyl gasket

E. Vitreous China Under-Mount Basin: ASME A112.19.2; vitreous china under-mount lavatory, front overflow, mounting kit and template by manufacturer

1. Bowl size: Size as indicated on Equipment Schedule

F. Supply Faucet Manufacturers:

1. American Standard, Inc

2. Kohler Company

3. Zurn Industries, Inc

4. Chicago Faucets

5. Symmons

6. Toto

7. T&S Brass

8. Speakman

9. Moen

10. Mac Faucets

G. Supply Faucet: ASME A112.18.1; chrome plated supply fitting with open grid strainer, water economy aerator with maximum flow of 0.5 gallon per minute (low-flow), handles or sensor as indicated on Equipment Schedule

H. Sensor Operated Faucet: Cast brass, chrome plated, wall mounted with sensor located on neck of spout

1. Power Supply: Battery, easily replaceable, alkaline or lithium, minimum 200,000 cycles

2. The sensor faucet shall have access to controls and battery through spout. Provide with vandal resistant aerator, cover plate to match hole pattern of lavatory, and supply hose(s).

3. Water Supply: 1/2-inch compression connections

4. Aerator: Vandal resistant, 0.5 GPM, laminar flow device

5. Automatic Shut-off: 30 seconds

6. Sensor range: Factory set at a minimum of 3 inch adjustable up to 24 inches

7. Finish: Polished chrome

8. Accessory: 4-inch deck plate

9. Lead Content: Extra low; maximum 0.25 percent by weighed average

10. Sensor Operated Faucet Manufacturers:

    a. American Standard, Inc

    b. The Chicago Faucet Company

    c. Moen Incorporated

    d. Sloan Valve Company

    e. Toto USA

    f. Zurn Industries, Inc; AquaSense Z6913

    g. Symmons

    h. Speakman

    i. Mac Faucets

    j. Delany

11. P-Trap:

    a. 17-gauge seamless chrome plated brass

    b. Adjustable, ground joint swivel

    c. 2" water seal

    d. Provide cleanout

    e. Manufacturers

        1) Just Manufacturing

        2) Engineered Brass Company

        3) McGuire Manufacturing

2.07 WALL-HUNG, SOLID SURFACE, MULTISTATION LAVATORY UNITS

A. Description: Rectilinear, level-surface deck, seamless and integral elongated basin, with stainless steel enclosed pedestal cabinet

B. Deck and Bowl Material: Fabricate from molded engineered stone material consisting of natural quartz, granite, and other minerals in a matrix of thermoset acrylic modified bio-based polyester resin and meeting requirements of IAPMO Z124.

C. Surface Burning Characteristics: Smoke developed index less than 50, and flame spread index less than 25, Class A, when tested in accordance with ASTM E84

D. Number of Wash Stations: As indicated on the Equipment Schedule

E. Soap Dispenser:

1. Deck-mounted, 16-ounce (473 mL) plastic globe, with 4-inch spout

F. Water Supply: Thermostatic mixing valve assembly

G. Color: As selected by Architect from manufacturer's full line

H. Sensor-Operated Faucets:

1. High profile metering faucet with infrared and external temperature control

2. Vandal-resistant meeting requirements of ASME A112.18.1 and ADA Standards compliant

3. Body: Polished chrome plated commercial solid cast brass, with 4-inch (102 mm) centerset mounting with anti-rotation trim plate

4. Tempered Water Supply: ADA Standards compliant lever on faucet body

5. Aerator: Flow rate of 0.5 gal/min at an operating range of 20 to 80 psi

6. Sensor Module: Water conserving, vandal-resistant adjustable sensor unit with timing turn-off delay and stationary object automatic timed cutoff, with battery diagnostic light, serviceable from above deck

7. Thermostatic Mixing Valve: Thermostatic mixing valve, ASSE 1070 listed, with combination stop, strainer, and check valves, and flexible stainless-steel connectors

I. Access Panel: Stainless steel

J. Support Frame: Wall mounted, heavy gage, stainless steel

K. Manufacturers:

1. Bradley Corporation

2. Willoughby Industries

3. Intersan

4. Acorn

2.08 SINKS

A. Sink Manufacturers:

1. Just

2. Elkay

B. Single Compartment Bowl: ASME A112.19.3; 18 gage, 0.0359 inch (0.91 mm) thick, Type 304 stainless steel, self rimming and undercoated, with ledge back drilled for trim

1. Drain: 3-1/2-inch crumb cup and tailpiece

2. Verify amount of hole punches required for each sink prior to ordering.

C. Double Compartment Bowl: ASME A112.19.3; 18 gage, 0.0359 inch (0.91 mm) thick, Type 304 stainless steel, self rimming and undercoated, with ledge back drilled for trim

1. Drain: 3-1/2-inch crumb cup and tailpiece

2. Verify amount of hole punches required for each sink prior to ordering.

2.09 UNDER-LAVATORY PIPE SUPPLY COVERS

A. Manufacturers:

1. Plumberex Specialty Products, Inc

2. ProWrap

B. General:

1. Insulate exposed drainage piping including hot, cold and tempered water supplies under lavatories or sinks per ADA Standards.

2. Adhesives, sewing threads and two-ply laminated materials are prohibited.

3. Exterior Surfaces: Smooth nonabsorbent with no finger recessed indentations for easy cleaning.

4. Construction: 1/8-inch PVC with antimicrobial, antifungal and UV resistant properties.

   a. Provide one piece injected molded design with internal bridge at top of J-bend to prevent separating.

   b. Comply with ASTM C1822 Type III for covers on accessible lavatory piping.

   c. Thermal Resistance: R value of 0.504 or lower when tested by ASTM C177

   d. Microbial and Fungal Resistance for Interior and Exterior: Comply with ASTM G21

C. Under-Lavatory Covers with Snap-Lock Fasteners:

1. Manufacturers:

   a. Plumberex Specialty Products, Inc: Plumberex Pro-Extreme

2. Construction: PVC with antimicrobial, antifungal, and UV-resistant properties, one piece injected molded design with internal bridge at top of J-bend to prevent separating.

3. Fasteners: Reusable, snap-locking fasteners with no sharp or abrasive external surfaces. No cable ties allowed.

4. Maintenance: Valve and supply cover shall be accessible for maintenance without removal and with removable, reusable access cap.

5. Provide with weep hole for condensation drainage and ventilation.

6. Vandal Resistance: Internal line grooves for trimming not easily torn by hand. All trim line grooves shall require tool cutting only.

7. Color: High gloss white

2.10 SHOWER RECEPTORS

A. Solid Surfacing Shower Receptors: Solid plastic resin casting, self-supporting, for installation over conventional subfloor; complying with IAPMO Z124

1. Material: Complying with ISFA 2-01 and NEMA LD 3; acrylic or polyester resin, renewable material filler, and pigments; homogenous, non-porous and capable of being worked and repaired using standard woodworking tools; no surface coating; color and pattern consistent throughout thickness.

2. Surface Burning Characteristics: Flame spread index of 25 or less, and smoke developed index of 450 or less, Class A, when tested in accordance with ASTM E84

3. Finish on Exposed Surfaces: Provide satin or matte, gloss rating of 3 to 20.

4. Color/Pattern Family: White

5. Manufacturers:

a. Fiberfab

b. Lasco

B. Drain Trim: Removable chrome plated strainer and tail piece

2.11 SHOWERS

A. Shower Manufacturers:

1. Fiberfab

2. Lasco

B. Cabinet: IAPMO Z124 reinforced glass fiber, size as indicated on Equipment Schedule with smooth texture, integral receptor, soap dish, removable chrome plated strainer, tail piece, white color.

C. Shower Valve:

1. Comply with ASME A112.18.1

2. Provide two way in-wall diverter valve body with integral thermostatic mixing valve to supply 1.5 gpm.

3. Shower Valve Manufacturers:

a. Bradley

b. Symmons

c. Powers

d. Speakman

e. Moen

f. Acorn

D. Shower Head:

1. Shower Head Manufacturers:

a. Speakman

b. Bradley

c. Symmons

d. Powers

e. Moen

f. Acorn

E. Low-Flow Shower Head:

1. ASME A112.18.1; chrome-plated vandal-proof institutional head with integral wall bracket, built-in 1.5 gpm flow control

2. Low-Flow Shower Head Manufacturers:

a. Speakman

b. Bradley

c. Symmons

d. Powers

e. Moen

f. Acorn

F. Hand-Held Shower Head:

1. ASME A112.18.1, adjustable spray hand-held shower head with swivel fitting with ASSE 1014 backflow preventer

2. Provide pushbutton flow control.

3. Include 60-inch minimum flexible polished stainless-steel hose and in-line vacuum breaker

4. Provide 25-inch grab bar with sliding spray holder that locks at any height, allowing use of unit as either a hand-held spray or a fixed shower head.

5. Hand-Held Shower Head Manufacturers:

a. Speakman

b. Symmons

c. Bradley

d. Powers

e. Moen

f. Acorn

2.12 INDOOR DRINKING FOUNTAINS

A. Drinking Fountain Manufacturers:

1. Elkay Manufacturing Company

2. Halsey Taylor

3. Haws Corporation

4. Murdock Manufacturing

B. Fountain: brushed Stainless Steel, surface mounted, with elevated anti-squirt bubbler with stream guard, automatic stream regulator, bar handle, access cover plate, mounting bracket, screwdriver stop.

C. If labeled 'Vandal Resistant' on Equipment Schedule, provide heavy duty, 14-gauge stainless steel cabinet with vandal resistant screw hardware.

2.13 ELECTRIC WATER COOLERS

A. Electric Water Cooler Manufacturers:

1. Elkay Manufacturing Company

2. Haws Corporation

3. Oasis, a Lynn Tilton Company

4. Murdock Manufacturing

B. Water Cooler: Electric, mechanically refrigerated; surface ADA mounted; stainless steel top, stainless steel body, elevated anti-squirt bubbler with stream guard, automatic stream regulator, push button, mounting bracket; integral air-cooled condenser and stainless-steel grille.

1. Capacity: Provide a minimum of 8 gallons per hour of 50 degrees F water with inlet at 80 degrees F and room temperature of 90 degrees F, when tested in accordance with ASHRAE Std 18.

2. Electrical: 115 V, 60 Hertz compressor, 6-foot cord and plug for connection to electric wiring system including grounding connector. Coordinate receptacle location with EC

C. Bottle Filler: Materials to match fountain. See below for specifications.

D. If labeled 'Vandal Resistant' on Equipment Schedule, provide heavy duty, 14-gauge stainless steel cabinet with vandal resistant screw hardware. Provide stainless steel louver screening to prevent objects from being inserted into cabinet.

2.14 BOTTLE FILLER (WALL MOUNTED)

A. See Plumbing Fixture Schedule for manufacturer and model number.

B. Bottle filler shall be electronic sensor operated for touch free operation. Provide antimicrobial protection of water stream parts.

C. Provide water filter to meet NSF/ANSI 42 and 53 for taste and odor, particulate and lead reduction.

D. Waterway to be certified to meet lead-free as defined by the Safe Drinking Water Act.

E. Provide each bottle filler with a water supply, stop, p-trap waste and electrical connection.

F. Approved manufacturers: Same as drinking fountains and electric water coolers

2.15 SERVICE SINKS

A. Service Sink Manufacturers:

1. Florestone

2. Fiat

3. Acorn

B. Bowl: 36 by 24 by 10 inch high unless otherwise stated in the plumbing fixture schedule, white molded stone, floor mounted, with one-inch-wide shoulders, vinyl bumper guard, stainless steel strainer

C. Accessories:

1. 4 feet of 1/2 inch diameter plain end reinforced plastic hose

2. Hose clamp hanger

3. Mop hanger

2.16 EMERGENCY EYE WASH

A. Emergency Wash Manufacturers:

1. Haws Corporation

2. Stingray Systems

3. Guardian

4. Bradley

5. Speakman

6. Acorn

B. Emergency Wash: ANSI Z358.1; wall-mounted, self-cleaning, non-clogging eye wash with quick opening, full-flow valves, ABS eye wash receptor, twin eye wash heads, ABS dust caps, copper alloy control valve and fittings, stainless steel push handle activator.

C. 4.9 gpm @ 30psi flow

2.17 EMERGENCY SHOWERS

A. Emergency Shower Manufacturers:

1. Haws Corporation

2. Stingray Systems

3. Guardian

4. Bradley

5. Speakman

6. Acorn

B. Emergency Shower: ANSI Z358.1; free standing, self- cleaning, non-clogging 8-inch diameter plastic deluge shower head with elbow, 1-1/4 inch full flow valve with pull chain and 8 inch diameter ring, one inch interconnecting fittings.

C. 20 gpm @ 30psi flow. Provide restrictor for higher pressures.

D. Powder coated yellow, aluminum triangular pull rod activator with ADA extension

E. IPS galvanize steel piping stanchion & fittings

2.18 FLOOR DRAINS (F.D.)

A. Cast iron body, heavy duty floor drain, with 5" nickel bronze adjustable strainer head, vandal proof screws, and trap primer connections. Size outlet to match pipe size shown on drawings. Where used for shower drain, provide with chrome plated strainer. Furnish with 6" diameter strainer and funnel where indicated.

B. Cast iron body, heavy duty floor drain, with Type 'N' 7" diameter, nickel bronze grate, vandal proof screws, and trap primer connections. Size outlet to match pipe size shown on drawings. Use in mechanical rooms and utility spaces.

C. Floor drains labeled medium duty, light duty, or commercial duty are not allowed.

D. Manufacturers:

1. J.R. Smith
2. Josam
3. Zurn
4. Wade
5. MIFAB
6. Watts

2.19 CORROSIVE RESISTANT FLOOR DRAINS

A. Floor drain shall be manufactured from PVFD material conforming to ASTM D3222. Grate, plug, and covers are to be made from fiber-filled PVFD.

B. Manufacturers:

1. Enfield
2. Fuseseal
3. Orion
4. Zurn

2.20 FLOOR SINKS (FS)

A. 12x12x6 deep cast iron body and square slotted medium duty grate, with white acid resisting porcelain enamel interior and top, complete with white ABS anti-splash interior bottom dome strainer.

B. Manufacturers:

1. J.R. Smith
2. Josam
3. Zurn
4. Wade
5. MIFAB
6. Watts

2.21 STORM DRAINS

A. Roof drains: Cast Iron Body with Combined Flashing Clamp, Gravel Stop with Low Profile Poly dome. No-Hub, Inside Caulk, vandal resistant screws, and Threaded Outlet Options from 2" to 8 " pipe size. Size outlet to match pipe size shown on drawings. J.R. Smith 1010-R-C-G or equal.

B. Overflow drains: Cast Iron Body with Combined Flashing Clamp, Gravel Stop with Low Profile Poly dome. No-Hub, Inside Caulk, vandal resistant screws, internal water dam, and Threaded Outlet Options from 2" to 8 " pipe size. Size outlet to match pipe size shown on drawings. J.R. Smith Fig. 1070 or equal.

C. Downspout Nozzles: Provide with wall flange and rough bronze material and finish. Provide with no hub connection or pipe thread adaptor depending on drain pipe material. Size outlet to match pipe size shown on drawings. J.R. Smith Fig. 1770 or equal.

D. Manufacturers:

1. J.R. Smith
2. Josam
3. Zurn
4. Wade
5. MIFAB
6. Watts

2.22 HOT WATER DISPENSER

A. Hot water dispenser shall be U.L. listed, 750 watts, 6.5 amps, 115 volts, factory mounted 3 wire cord and 3 prong plug, adjustable thermostat with range of 140°F to 200°F. ½ gallon storage capacity with faucet having chrome plated finish. Refer to manufacturer's installation manual for proper installation. Provide shut-off valve in supply line to unit, install in back left or back right corner of sink.

B. Manufacturers:

1. In-sink-erator (ISE)

2. Other manufacturers will be allowed by prior approval only. To request approval, the manufacturer must provide an equipment layout showing how the proposed equipment will fit in the space and meet all access requirements. This manufacturer must include in the cost of the proposed equipment, at bid time, the difference in piping, electrical, etc.

2.23 HYDRANTS

A. Wall Hydrants: Approved freeze-proof type with integral anti-siphon vacuum breaker, self-draining, ¾ hose connection, loose key operated:

1. Manufacturers:

a. Zurn: Z-1310

b. Wade: W-8620 with union elbow

c. Smith: 5609

d. Josam: 71050

e. Woodford: 65

f. Acorn: 8161

B. Wall Hydrant (dual temperature): Hot and cold supply, non-freeze type with vacuum breaker device, ¾" hose connection, loose key operated:

1. Manufacturers:

a. Smith: 5660

b. Zurn: Z-1325

c. Woodford: 22

d. Acorn: 8146

C. Wall Box Hydrants: Freezeproof type with integral anti-siphon vacuum breaker, ¾" hose connection, loose key operated, enclosed in a bronze or stainless-steel box for flush wall installation with hinged door and key lock:

1. Manufacturers:

a. Jay R. Smith: 5509QT

b. Zurn: Z-1300

c. Woodford: B 65

d. Acorn: 8160

D. Wall Box Hydrant (dual temperature): Hot and cold supply, approved freeze-proof type with vacuum breaker device, ¾" hose connection, loose key operated, enclosed in a bronze box for flush wall installation with hinged door and operating key lock:

1. Manufacturers:

a. J.R. Smith: 5560

b. Zurn: Z-1325

c. Woodford: HCB67

d. Acorn: 8156

E. Ground Box Hydrant Freezeproof Flush Type (Non-Potable): Approved encased freeze-proof type, ¾" hose connection, enclosed in a rough bronze box for flush with grade installation with hinged cover with operating key lock:

1. Manufacturers:

a. Zurn: Z-1360

b. J.R. Smith: 5810

c. Woodford: Y95

2.24 HOSE BIBBS

A. Surface Mounted: Approved types with integral vacuum breaker, ¾" hose connection, chrome plated face and loose key:

1. Manufacturers:

a. J.R. Smith: 5618

b. Woodford: Model 75

c. Chicago Faucet: Model 387-E27CP

d. Acorn: 8141

B. Surface Mounted in a Box: Approved type with integral vacuum breaker, ¾" hose connection, enclosed in box for flush wall installation with hinged door and operating key lock.

1. Manufacturers:

a. Woodford: Model B75

b. Zurn: Z1350-VB

c. J.R. Smith: 5518

d. Acorn: 8151

2.25 KITCHEN EQUIPMENT

A. Commercial dishwashers, soda dispensers, combination ovens/steamers, and food grinder/disposers shall be provided with a reduced pressure backflow assembly, sized to match supply piping. Connect fixed air gap with nipple to match vent drain outlet size of backflow assembly. Route drain full size to nearest floor drain or floor sink.

B. Provide pressure-reducing valve (Wilkins 70 LP series or equal) and pressure gauge on incoming water to dishwasher, size reducing valve per dishwasher manufacturer's recommendations.

C. Kitchen plumbing fixtures are supplied by the General Contractor. All connections by this Contractor. Faucets, fitting stops and/or ball valves, risers, traps and all other appurtenances are to be provided by this Contractor unless otherwise specified.

PART 3 - EXECUTION

3.01 EXAMINATION

A. Verify that walls and floor finishes are prepared and ready for installation of fixtures.

B. Verify that electric power is available and of the correct characteristics.

C. Confirm that millwork is constructed with adequate provision for the installation of counter top lavatories and sinks.

3.02 PREPARATION

A. Rough-in fixture piping connections in accordance with minimum sizes indicated in fixture rough-in schedule for particular fixtures.

3.03 INSTALLATION

A. Install each fixture with a removable trap to be easily removable for servicing and cleaning.

B. Provide chrome plated rigid supplies to fixtures with loose key stops, reducers, and escutcheons.

C. Install components level and plumb.

D. Make fixture floor connections with approved brand of cast iron floor flange, soldered or caulked securely to waste pipe.

E. Make joints between fixtures and floor flanges tight with approved fixture setting compound or gaskets.

F. Caulk between fixtures and wall and floor with white butyl rubber non-absorbent caulking compound. Point edges.

G. Install and connect all Kitchen Fixtures. Provide chrome plated brass waste, "Just" or equal.

H. Provide concealed arm supports for wall mounted china lavatories.

I. All exposed metal shall be chrome-plated brass.

J. Provide floor-mount fixture support with concealed heavy steel stanchion and supporting plate for lavatories and urinals.

K. Provide floor-mount fixture support for wall-hung water closets, and with 2” no-hub auxiliary inlet at each location of back-to-back water closet and urinal.

L. Provide flush valve supply support on all WC and urinal carriers.

M. Provide rear anchor support for all heavy-duty WC carriers.

N. Provide trap primer and connection to p-trap of showers, floor sinks, floor drains, and service sinks.

O. ADA showers shall be installed with entrance lip flush with finish floor.

P. On ADA water closets, provide flush valve handle or tank handle on side facing wheelchair turn around.

Q. All ADA lavatory P-trap and angle stop assemblies shall be insulated with institutional A.D.A. insulator kit as manufactured by E.B.C. or equal. Abrasion resistant exterior cover shall be smooth and have 1/8" wall minimum over cushioned foam insert. Fasteners shall remain substantially out of sight. Use part 500RHS on offset P-trap if required.

R. Sensor Type Fixtures: Mechanical contractor to coordinate with electrical contractor for installation of all infra-red sensor type fixtures. Transformer kit provided and installed by mechanical contractor, all electrical connectors, wire connections, and testing by electrical contractor.

S. Hose Bibb: Install one (1) hose bibb in each toilet room with 2 or more water closets, urinals or a combination thereof, mount at 18" under one lavatory.

T. Wall Hydrant: Install at 18" above finished grade, unless otherwise indicated.

3.04 INTERFACE WITH WORK OF OTHER SECTIONS

A. Review millwork shop drawings. Confirm location and size of fixtures and openings before rough-in and installation.

3.05 ADJUSTING

A. Adjust stops or valves for intended water flow rate to fixtures without splashing, noise, or overflow.

3.06 CLEANING

A. Clean plumbing fixtures and equipment.

B. Polish chrome finish at completion of Project.

C. Remove all manufacturers' labels tags, and protective plastic.

D. Polish floor drain covers.

3.07 PROTECTION

A. Protect installed products from damage due to subsequent construction operations.

B. Repair or replace damaged products before Date of Substantial Completion.

3.08 MOUNTING HEIGHTS

A. Fixture Heights: Install fixtures to heights above finished floor as indicated on the architectural elevation drawings. Architectural elevation dimensions take precedent over the following heights:

1. Water Closet:

   a. Standard: 16-17 inches to top of seat

   b. ADA: 17-19 inches to top of seat

   c. Pre-school and Kindergarten: 13 inches to top of seat (Upon approval by District)

2. Urinal:

   a. Standard: 24 inches from floor to bottom lip

   b. ADA: 16 inches from floor to bottom lip

   c. Pre-school and Kindergarten: 16 inches from floor to bottom lip

3. Lavatory:

   a. Standard: 29 inches from floor to top of apron

   b. ADA: 33 inches from floor to top of apron with 29 inches clearance under fixture

4. Drinking Fountain:

   a. Standard: 40 inches from floor to bubbler height

   b. ADA: 36 inches from floor to bubbler height with 27 inches clearance under fixture

5. Shower Heads and Control Valve:

   a. Adult Male: 69.5 inches to bottom of head

   b. Adult Female: 64.5 inches to bottom of head

   c. Child: 58.5 inches to bottom of head

   d. Standard control valve: 48 inches above finished floor

   e. ADA control valve: 40 inches above finished floor

6. Emergency Eye Wash:

   a. See installation detail on plans for combination eyewash/shower.

7. Emergency Shower:

   a. See installation detail on plans.

END OF SECTION

SECTION 23 0513

MOTORS AND VARIABLE DRIVES

PART 1 - GENERAL

1.01 GENERAL

A. Includes, but not limited to, motors 1/12 HP or larger used in Division 23.

1.02 RELATED SECTIONS

A. General Conditions, Division 1

B. Section 20 0000 – General Mechanical Requirements

1.03 SUBMITTALS REQUIREMENTS OF THIS SECTION

A. All variable drives.

B. Total harmonic voltage distortion calculation.

1.04 OPERATION AND MAINTENANCE REQUIREMENTS OF THIS SECTION

A. Check out sheet for each variable drive showing all programmed parameters. Date of check out, and name and company address of employee responsible for checkout.

B. Programming manual explaining how to access and change all programmable points.

C. International wiring diagram for each different unit.

D. Parts diagram with replacement parts listed.

E. Trouble shooting guide.

PART 2 - PRODUCTS

2.01 MOTORS

A. Motors located indoors shall be open frame, drip-proof type, unless indicated otherwise. Motors located outdoors exposed to weather shall have corrosion resistant finish and shall be totally enclosed fan cooled (TEFC) or totally enclosed non-ventilated (TENV) type, unless indicated otherwise. Motors used in fans serving dishwashing hoods shall be TEFC type.

B. All motors shall be UL listed.

C. All motors used with variable frequency drives shall be premium efficiency inv*ert*er ready and shall be capable of running at least 85 Hz.

D. All motors 1 HP and larger shall be energy efficient type and shall meet the 2015 Washington State Energy Code requirements.

E. All fan motors 1/12 HP or greater and less than 1 HP shall be Electronically Commutated Motors (ECM) or shall have a minimum motor efficiency of 70 percent when rated in accordance with DOE 10 C.F.R. 431. These motor speeds shall be adjustable.

F. Motors shall not be smaller than indicated on drawings; however, motors shall be of adequate size to drive the respective equipment when handling the quantities specified without exceeding the nameplate full load current at any conditions encountered in actual operation. If it becomes evident that a motor furnished is too small to meet these requirements as a result of the Contractor using substituted equipment or having revised the system arrangement, the Contractor shall replace it with a motor of adequate size at no additional cost to the Owner. This Contractor shall also arrange with the Electrical Contractor to increase the size of the wiring, motor starter and other accessories as required to serve the larger motor at no additional cost to the Owner.

G. ECM (Electrically Commutated Motors) shall conform to the motor requirements listed above. In addition, the Contractor purchasing the HVAC equipment that includes the ECM is responsible for ensuring the ECM motor control speed control is set to match the required component operation. The ECM motor control speed control may be preset by the HVAC equipment manufacturer. The Contractor purchasing the HVAC equipment shall provide documentation showing the appropriate ECM motor control board jumper pins, dip switches and/or multi-pin plugs settings for correct HVAC equipment component operation.

H. Approved Manufacturers:

1. General Electric
2. Westinghouse
3. Reliance
4. Allis-Chalmers
5. Gould
6. Century
7. Wagner
8. Baldor
9. U.S. Motors Marathon

2.02 VARIABLE FREQUENCY DRIVES (VFD UNDER 5 HP)

A. Variable Frequency Drives (VFD):

1. Description:

a. Provide enclosed adjustable speed drives suitable for operating at the current, voltage, and horsepower indicated on the equipment schedule. Conform to requirements of NEMA ICS 3.1.

b. VFD shall not increase the voltage distortion above 5% at the input terminals of the VFD or line filters. The manufacturer shall make all modifications to the drive necessary to meet this requirement.

B. Ratings:

1. VFD must operate, without fault or failure, when voltage varies plus or minus 10 percent from rating and frequency varies plus or minus 5 percent from rating.

2. VFD shall be voltage as shown on schedule.

3. Operating Ambient Temperature: 14 degrees F to 104 degrees F.

4. Humidity: non-condensing to 95%.

5. Altitude: to 3300 feet, higher altitudes achieved by derating.

6. Starting Torque: 100% starting torque shall be available from 0.5 Hz to 60 Hz.

7. Overload capability: 110% of rated F.L.A. (full load amps) for 60 seconds; 150% of rated F.L.A., instantaneously.

8. The VFD must meet the requirements for Radio Frequency Interface (RFI) above 7 MHz as specified by FCC regulations, part 15, subpart J, Class A devices.

9. In compliance with IEEE 519, the Total Harmonic Voltage Distortion for the VFD shall be no greater than 5%, the supplier of the VFD shall provide a dc bus choke or line reactors to ensure compliance. In order to estimate THVD the following is needed: Point of Common Coupling (PCC) and the KVA, and secondary voltage of the supply transformer. Assume 5.00% transformer impedance. If no transformer is present assume 50% of service demand.

10. VFDs must have a minimum short circuit rating of 65 Kamps RMS without additional input fusing.

C. Design:

1. VFD shall employ microprocessor-based inverter logic, isolated from all power circuits.

2. VFD shall include surface mount technology, with conformal coating.

3. VFD shall employ a PWM (pulse width modulated) inverter system, consisting of:

   a. Input Section:

      1) VFD input power stage shall convert three-phase AC line power into a fixed DC voltage via a solid-state full wave diode rectifier, with MOV (metal oxide varistor) protection.

   b. Intermediate Section:

      1) DC bus as a supply to the VFD Output Section shall maintain a fixed voltage with filtering and short circuit protection.

      2) DC Bus shall be interfaced with the VFD diagnostic logic circuit, for continuous monitoring and protection of the power components.

   c. Output Section:

      1) Insulated gate bipolar transistors (IGBT's) shall convert DC bus voltage to variable frequency and voltage.

      2) PWM sine coded output to the motor.

4. The VFD must be selected for operation at carrier frequencies at or above 5 kHz without derating to satisfy the conditions for current, voltage and horsepower as indicated on the equipment schedule.

5. VFD shall include one independent remote reference input. The input shall be 0 - 10 VDC or 4 – 20mA. Input shall respond to a programmable bias and gain.

6. VFD shall include a minimum of two digital input terminals:

   a. Reverse rotation direction

   b. Remote Reset

7. VFD shall provide terminals for remote contacts, to allow starting in the automatic mode.

8. VFD shall include one fully rated form “A” contact and one fully rated form “C” contact. The contact purpose is selectable and shall provide one of two functions:

    a. Drive Running

    b. Drive Faulted

9. VFD shall include a power loss ride of 2 seconds.

10. VFD shall include front mounted control operators that set the motor overheat drive shutdown, set the acceleration and deceleration, and set the output frequency limits. Operating mode (auto or manual) and speed setting functions shall also be provided.

11. VFD shall include electronic thermal overload protection for both the drive and motor. The electronic thermal motor overload shall be approved by UL. If the electronic thermal motor overload is not approved by UL, a separate UL approved thermal overload relay shall be provided in the VFD enclosure.

12. VFD shall include the following program functions:

    a. Auto restart capability.

    b. Stall prevention capability.

    c. Ability to close fault contact after the completion of all fault restart attempts.

13. VFD shall include factory settings for all parameters, and the capability for those settings to be reset.

14. VFD shall include the capability to adjust the following functions, while the VFD is running:

    a. Forward/Reverse direction.

    b. Acceleration adjustment from 0 to 3600 seconds.

    c. Deceleration adjustment from 0 to 3600 seconds.

    d. One preset speed.

15. All units to be provided with fused disconnect integral to the VFD. Fuse sized for the equipment per NEC.

D. Product Options:

1. Provide the following:

a. RFI (radio frequency interference) filters to attenuate possible VFD generated noise. The addition of these filters should reduce the line conducted noise levels within the limits of FCC regulations, part 15, subpart J, for Class A devices.

b. Current limiting input fusing for the protection of VFD semiconductor devices.

c. Line reactors reduce the effect of the load and line side transients on the drive. May be used on either the input side or output side of the drive.

d. “DC bus reactor”, to attenuate harmonic distortion.

e. DV/DT Filtering: When inverter duty type motors are not provided, maximum allowed VFD output rise is 1000 volts in 2 microseconds.

E. Fabrication:

1. Enclosure: NEMA Type 1 unless otherwise specified on drawings.

F. Source Quality Control:

1. In-circuit testing of all printed circuit boards shall be conducted, to insure the proper mounting and correct value of all components.

2. All printed circuit boards shall be burned in for 96 hours, at 85 degrees C.

3. Final printed circuit board assemblies shall be functionally tested, via computerized test equipment. All tests and acceptance criteria shall be preprogrammed. All tests results shall be stored as detailed quality assurance data.

4. All fully assembled controls shall be functionally tested, with fully loaded induction motors. The combined test data shall then be analyzed, to insure adherence to quality assurance specifications.

5. Inspect and production test, under load each completed VFD assembly.

G. Acceptable Manufacturers:

1. Square D

2. ABB

3. Yaskawa

4. Danfoss

2.03 VARIABLE FREQUENCY DRIVES (VFD 5 HP AND OVER)

A. Variable Frequency Drives (VFD):

1. Description:

a. Provide enclosed adjustable speed drives suitable for operating at the current, voltage, and horsepower indicated on the equipment schedule. Conform to requirements of NEMA ICS 3.1.

b. VFD shall not increase the voltage distortion above 5% at the input terminals of the VFD or line filters. The manufacturer shall make all modifications to the drive necessary to meet this requirement.

B. Ratings:

1. VFD must operate, without fault or failure, when voltage varies plus or minus10 percent from rating, and frequency varies plus or minus 5 percent from rating.

2. VFD shall be voltage as shown on schedule.

3. Displacement Power Factor: 0.98 over entire range of operating speed and load.

4. Operating Ambient Temperature: 14 degrees F to 104 degrees F.

5. Humidity: non-condensing to 95%.

6. Altitude: to 3300 feet, higher altitudes achieved by derating.

7. Minimum Efficiency: 96% at half speed; 98% at full speed.

8. Starting Torque: 100% starting torque shall be available from 0.5 Hz to 60 Hz.

9. Overload capability: 110% of rated F.L.A. (full load amps) for 60 seconds; 150% of rated F.L.A., instantaneously.

10. The VFD must meet the requirements for Radio Frequency Interface (RFI) above 7 MHz as specified by FCC regulations, part 15, subpart J, Class A devices.

11. In compliance with IEEE 519, the Total Harmonic Voltage Distortion for the VFD shall be no greater than 5%, the supplier of the VFD shall provide a dc bus choke or line reactors to ensure compliance. In order to estimate THVD the following is needed: Point of Common Coupling (PCC) and the KVA, secondary voltage, and impedance of the supply transformer.

12. VFDs must have a minimum short circuit rating of 65 Kamps RMS without additional input fusing.

13. All motors with variable frequency drives over 5 HP shall have power factor correction to 0.95 or better.

C. Design:

1. VFD shall employ microprocessor-based inverter logic, isolated from all power circuits.

2. VFD shall include surface mount technology, with conformal coating.

3. VFD shall employ a PWM (pulse width modulated) inverter system, consisting of:

a. Input Section:

1) VFD input power stage shall convert three-phase AC line power into a fixed DC voltage via a solid-state full wave diode rectifier, with MOV (metal oxide varistor) protection.

b. Intermediate Section:

1) DC bus as a supply to the VFD Output Section shall maintain a fixed voltage with filtering and short circuit protection.

2) DC Bus shall be interfaced with the VFD diagnostic logic circuit, for continuous monitoring and protection of the power components.

c. Output Section:

1) Insulated gate bipolar transistors (IGBT's) shall convert DC bus voltage to variable frequency and voltage.

2) PWM sine coded output to the motor.

4. The VFD must be selected for operation at carrier frequencies at or above 5 kHz without derating to satisfy the conditions for current, voltage and horsepower as indicated on the equipment schedule. Exception to this requirement is allowed only for VFDs providing 80 amps or more.

5. VFD shall have an adjustable carrier frequency: The carrier frequency shall have a minimum of six settings to allow adjustment in the field.

6. VFD shall include two independent remote reference inputs. One shall be 0 - 10 VDC or 4 – 20mA. Either input shall respond to a programmable bias and gain.

7. VFD shall include a minimum of five multi-function input terminals, capable of being programmed to determine their function when their state is chanced. These terminals shall provide up to 30 functions, including but not limited to:

    a. Remote/Local operation selection

    b. Detection of external fault condition

    c. Remote Reset

    d. Multi-step speed commands

    e. Jog Command

8. VFD shall include a 0-10V DC analog output for either monitoring, or “speed tracking” the VFD. The 0-10V DC analog output signal will be proportional to output frequency, output current, output power, or DC bus voltage.

9. VFD shall provide terminals for remote contacts, to allow starting in the automatic mode.

10. VFD shall include at least one external fault input, which shall be programmable for a normally open or normally closed contact. The contacts can be used for connection to firestats, freezestats, etc.

11. VFD shall include one fully rated form “A” contact and one fully rated form “C” contact, capable of being programmed to determine what conditions must be met in order for them to change their state. These contacts shall be rated for at least 1 Amp at 250 VAC. These terminals shall provide up to 18 functions, including but not limited to:

    a. Speed agree detection

    b. Low and high frequency detection

    c. Missing frequency reference detection

    d. Overtorque/Undertorque detection

    e. Drive Running

    f. Drive Faulted

12. VFD shall include a power loss ride of 2 seconds.

13. VFD shall include a front mounted, sealed keypad operator, with an English language illuminated LCD display. The operator will provide complete programming, operating, monitoring, and diagnostic capability. Keys provided shall include commands for RUN, STOP and RESET. Operating mode (auto or manual) and speed setting functions shall also be provided.

14. VFD English display shall provide readouts of; output frequency in hertz, output voltage in volts, output current in amps, output power in kilowatts, D.C. bus voltage in volts, interface terminal status, and fault codes. All displays shall be viewed in an easy-to-read illuminated LCD with English language as standard.

15. VFD unit shall include the following meters to estimate use of energy:

    a. Elapsed Time Meter

    b. Kilowatt Meter

    c. Kilowatt Hour Meter

16. VFD shall be capable of PID (Proportional, Integral, Derivative) logic, to provide closed-loop setpoint control capability, from a remote reference. In addition, an energy saving sleep function should be used in conjunction with the PID control. The SLEEP function reduces the unnecessary operation of equipment. When the SLEEP function senses a minimal deviation of a sensor (pressure, temperature), the system reacts by removing the run signal from the equipment. Upon receiving an ample sensor signal deviation, the equipment returns the run signal and resumes normal operation.

17. VFD shall include loss of input signal protection, with a speed default to 80% of the most recent speed.

18. VFD shall include electronic thermal overload protection for both the drive and motor. Protection profiles are available for variable or constant torque applications. The electronic thermal motor overload shall be approved by UL. If the electronic thermal motor overload is not approved by UL, a separate UL approved thermal overload relay shall be provided in the VFD enclosure.

19. VFD shall include the following program functions:

    a. Critical frequency rejection capability: 2 selectable, adjustable deadbands.

    b. Auto restart capability: 0 to 10 attempts.

    c. Stall prevention capability.

    d. “S” curve soft start capability.

e. “Speed search” capability, in order to start a rotating load.

f. 1 preset and 1 custom volts per hertz pattern.

g. One fully adjustable volts per hertz pattern.

h. Current limit adjustment capability, from 30% to 200% of rated full load current of the VFD.

i. Anti “wind-milling” function capability.

j. Energy saving PID control with SLEEP function.

k. Undertorque/Overtorque Detection.

l. Ability to close fault contact after the completion of all fault restart attempts.

20. VFD shall include factory settings for all parameters, and the capability for those settings to be reset.

21. VFD shall include the capability to adjust the following functions, while the VFD is running:

a. Forward/Reverse direction.

b. Acceleration adjustment from 0 to 3600 seconds.

c. Deceleration adjustment from 0 to 3600 seconds.

d. A minimum of six different preset speeds.

e. Analog output gain, to calibrate the signal for the application used.

22. All units to be provided with fused disconnect integral to the VFD. Fuse sized for the equipment per NEC.

D. Product Option to be Provided:

1. Manual Bypass shall be provided. VFD and bypass components shall be mounted inside a common NEMA 1 enclosure, fully pre-wired, and ready for installation as a single UL listed device. Bypass shall include the following:

a. Input, output and bypass contactors to disconnect power to the VFD, when the motor is running in the bypass mode.

b. 115 V.A.C. control transformer, with fused primary.

c. Thermal overload relay, to protect the motor while operating in the bypass mode.

d. Circuit breaker/disconnect switch, with a “through-the-door” handle mechanism.

e. Control and safety circuit terminal strip.

f. “Drive-Off-bypass” selector switch.

g. Pilot lights for “Power On” and “Fault.”

h. “Normal/Test” selector switch, to allow testing and adjustment of the VFD, while the motor is running in the bypass mode.

i. “Auto/Manual” selector switch, to provide convenient switching between “manual” and “auto” modes.

2. Miscellaneous Options:

a. RFI (radio frequency interference) filters to attenuate possible VFD generated noise. The addition of these filters should reduce the line conducted noise levels within the limits of FCC regulations, part 15, subpart J, for Class A devices.

b. Current limiting input fusing for the protection of VFD semiconductor devices.

c. Line reactors reduce the effect of the load and line side transients on the drive. May be used on either the input side or output side of the drive.

d. DV/DT Filtering: When inverter duty type motors are not provided, maximum allowed VFD output rise is 1000 volts in 2 microseconds.

e. Pressure transducer (3 to 15 PSI input = 0 to 10 V DC output), to convert a pneumatic signal into a VFD auto reference signal.

f. “Smoke Purge,” to command full speed while bypassing the overload circuits to “purge” the building in case of emergency.

g. “Auto Transfer to Bypass Upon Drive Fault,” to automatically transfer power across the line, and continue motor operation, in the event of a VFD failure.

h. “DC bus reactor”, to attenuate harmonic distortion. Optional on 1 HP to 25 HP models.

i. Serial communications gateway, for either RS-232 or RS-485, to provide interface from an VFD to; a computer, a Program Logic Controller (PLC), Modbus RTU, or Building Automation Systems (See 15970). Serial Communication gateway for controls systems shall be via an isolated RS-485 board with the following features:

1) Command and monitor in excess of 60 points.

2) Ability to integrate into BYPASS configuration without losing end switch and/or safety interlock functionality.

3) Serial communication board self test.

4) Drive parameter storage within communication board.

5) Drive parameter download capability.

6) Drive parameter comparison feature.

7) 3 Indication LEDs to indicate reception, transmission, and fault of serial communications (Rxd, Txd, Fault).

E. Fabrication:

1. Enclosure: NEMA Type 1 unless otherwise specified on drawings.

F. Source Quality Control:

1. In-circuit testing of all printed circuit boards shall be conducted, to insure the proper mounting and correct value of all components.

2. All printed circuit boards shall be burned in for 96 hours, at 85 degrees C.

3. Final printed circuit board assemblies shall be functionally tested, via computerized test equipment. All tests and acceptance criteria shall be preprogrammed. All tests results shall be stored as detailed quality assurance data.

4. All fully assembled controls shall be functionally tested, with fully loaded induction motors. The combined test data shall then be analyzed, to insure adherence to quality assurance specifications.

5. Inspect and production test, under load each completed VFD assembly.

G. Approved Manufacturers:

1. Square D

2. ABB

3. Yaskawa

4. Danfoss

PART 3 - EXECUTION

Not Applicable

END OF SECTION

ASECTION 23 0523

VALVES FOR HVAC PIPING

PART 1 - GENERAL

1.01 GENERAL

A. Includes, but not limited to, valve installation for all hydronic water systems.

1.02 RELATED SECTIONS

A. Division 1 applies to this section

B. Section 20 0000 – General Mechanical Requirements

C. Section 23 0900 – Energy Management and Controls (DDC)

D. Section 23 1119 – HVAC Piping Specialties

E. Section 23 1123 – Pumps for HVAC Equipment

F. Section 23 2000 – Hydronic System

1.03 QUALITY ASSURANCE

A. Comply with MSS SP-25.

1.04 SUBMITTAL REQUIREMENTS OF THIS SECTION

A. All valve types

1.05 OPERATION AND MAINTENANCE REQUIREMENTS OF THIS SECTION

A. Valve Diagram

PART 2 - PRODUCTS

2.01 GENERAL

A. Provide factory-fabricated valves recommended by manufacturer for use in service indicated. Provide valves of types and pressure rating indicated; provide proper selection as determined by installer to comply with installation requirements. Provide sizes as indicated, and connections which properly mate with pipe, tube, and equipment connections. Where more than one type is indicated, selection is Installer's option. Valves shall be of same make for all these services.

2.02 GATE VALVES

A. Packing - Select valves, equipped with packing suitable for intended service. (Under no circumstances is asbestos acceptable.) Select valves designed so back seating protects packing and stem threads from media when valve is fully opened, and equipped with gland follower. Guides for disc on rising stem valves must be machined for accurate fit.

B. Comply with the Following Standards:

1. Cast-Iron Valves: MSS SP - 70

2. Bronze Valves: MSS SP - 80

C. For HVAC Hydronic Water Service:

1. Threaded Ends 2" and Smaller: Class 125, bronze body, union bonnet, rising stem, solid wedge: Nibco T-124/134, Milwaukee 1152 or equal.

2. Flanged Ends 2-1/2" and Larger: Class 125, iron body, bronze mounted, bolted bonnet, rising stem, OS&Y, solid wedge: Nibco F617-0, Milwaukee F2885 or equal.

3. Solder Ends 2" and Smaller: Class 125, bronze body, union bonnet, rising stem, solid wedge: Nibco S-124/134, Milwaukee 1142 or equal.

D. Manufacturers: Subject to compliance with requirements, provide gate valves of one of the following:

1. Milwaukee Valve Company

2. Apollo (by Conbraco Industries)

3. Nibco

2.03 GLOBE VALVESA

A. Packing - Select valves, equipped with packing suitable for intended service. (Under no circumstances is asbestos acceptable.) Select valves designed so back seating protects packing and stem threads from media when valve is fully opened, and equipped with gland follower.

B. Composition Discs - Where required, provide suitable material for intended service.

C. Comply with the Following Standards:

1. Cast-Iron Valves: MSS SP - 85

2. Bronze Valves: MSS SP - 80

D. For HVAC Hydronic Water Service:

1. Threaded Ends 2" and Smaller: Class 125, bronze body, union bonnet, rising stem, Teflon disc: Nibco T-211-Y, Milwaukee 590-T or equal.

2. Solder Ends 2" and Smaller: Class 125, bronze body, screwed bonnet, rising stem, bronze disc (swivel type): Nibco S211-B, Milwaukee 1502 or equal.

3. Flanged Ends 2-1/2" and Larger: Class 125. iron body, bolted bonnet, rising stem, OS&Y, renewable seat and disc: Nibco F-718-B, Milwaukee F2981, or equal.

E. Manufacturers: Subject to compliance with requirements, provide globe valves of one of the following:

1. Milwaukee Valve Company

2. Apollo (by Conbraco Industries)

3. Nibco

2.04 BALL VALVES

A. General - Select with FULL port opening or Standard port opening[*], blow-out proof stem, hard chrome plated bronze ball, rated not less than 600# W.O.G. (Where Cv factor is critical use FULL port opening.)

B. Comply with the Following Standards:

1. MSS SP-110 Ball Valves - THREADED, SOLDER JOINT

C. For HVAC Hydronic Water Service:

1. Threaded Ends 4" and Smaller: 600# W.O.G., bronze two-piece body, hard chrome plated bronze ball, true adjustable packing nut ("O"-ring only type stem seal not acceptable), blow-out proof stem: Nibco T-585-70, Apollo 70-Series [*], Milwaukee BA-100, or equal.

2. Soldered Ends 3" and Smaller: 600# W.O.G., bronze two-piece body, hard chrome plated bronze ball, true adjustable packing nut ("O"-ring only type stem seal not acceptable), blow-out proof stem: Nibco S-585-70, Apollo 70-Series [*], Milwaukee BA-150, or equal.

D. Manufacturers: Subject to compliance with requirements, provide ball valves of one of the following:

1. Milwaukee Valve Company

2. Apollo (by Conbraco Industries)

3. Nibco

2.05 BUTTERFLY VALVES

A. General - Comply with MSS SP-67. Where butterfly valves are used as shutoff for termination, or equipment removal or repair, select lug type valves. Select wafer type valves for other applications. Provide gear operators on butterfly valves 8" and larger. Valve bodies to have extended necks to provide for 2-1/4" insulation as needed. Install with stems horizontal.

1. For HVAC Hydronic Water Service:

a. Wafer Type 3" and Larger: Rated Working Pressure of 200 psi on sizes 3"-12", ductile-iron body, lever operated, 10-position throttling handle, bronze disc, type 410 stainless steel stem. EPDM seat.

b. Lug Type 3" and Larger: Rated Working Pressure of 200 psi on sizes 3"-12", ductile iron, drilled and tapped lug body, lever operated, 10 position throttling handle, bronze disc, type 410 stainless steel trim. EPDM seat.

c. Grooved Type: Rated working pressure of 300 psi. 2” and larger ductile iron body. Lever operated, 10 position throttling handle, ductile iron, EPDM encapsulated, one-piece disc and stem.

2. Approved Manufacturers:

a. Hammond Valve 6311 (Wafer)

b. Stockham Valve LG 512, LG 712

c. Milwaukee Valve Company MW123, ML123

d. Nibco WD, LD

e. Victaulic Masterseal

2.06 SWING CHECK VALVES

A. General - Construct pressure containing parts of Valves as follows:

1. Bronze Valves, 125 or 150 psi: ANSI/ASTM B 62

2. Iron Body Valves: ANSI/ASTM A-126, Grade B

B. Comply with the following standards for design, workmanship, material and testing:

1. Bronze Valves: MSS SP-80

2. Cast Iron Valves: MSS SP-71

C. Construct valves of pressure castings free of any impregnating materials.

D. Construct disc and hanger as one piece. Support hanger pins by removable side plug.

1. For HVAC Hydronic Water

a. Threaded Ends 2" and Smaller: Class 125, bronze body, screwed cap, 5-degree seated swing, Teflon disc.

1) Approved Manufacturers:'

a) Hammond IB904

b) Nibco T-413Y

c) Stockham B320T

d) Milwaukee 509

b. Soldered Ends 2" and Smaller: Class 125, bronze body, screwed cap, 5-degree seated swing, Teflon disc.

1) Approved Manufacturers:

a) Hammond IB912

b) Nibco S-413Y

c) Stockham B310T

d) Milwaukee 511

c. Flanged Ends 2-1/2" and Larger: Class 125, iron body, bronze mounted, horizontal swing, cast-iron disc.

1) Approved Manufacturers:

a) Hammond IR1124

b) Nibco F918-B

c) Stockham G931

d) Milwaukee F2974

d. Grooved Ends 2" and Larger: 300 psi pressure rating ductile iron body. EPDM encapsulated disc with welded in nickel seats.

1) Approved Manufacturer:

a) Victaulic #779 or W715

2.07 BALANCING VALVES

A. Each valve shall have two ¼" NPT brass metering ports with Nordel check valves and gasketed caps located on both sides of valve seat. Two additional ¼" NPT connections with brass plugs are to be provided on the opposite side of the metering ports for use as drain connections. Drain connections and metering ports are to be interchangeable to allow for measurement flexibility when valves are installed in tight locations.

B. Valves are to be of the "Y" pattern, modified, equal percentage globe style and provides three functions:

1. Precise flow measurement

2. Precision flow balancing

3. Positive drip tight shut off

C. Valves shall provide multi-turn, 360° adjustable with a micrometer type indicator located on valve handwheel. Valve handwheel shall have a memory feature, which will provide a means for locking the valve position after the system is balanced. 90° turn adjustable valves are not acceptable.

D. Valve Sizes ½" – 2": Valve body shall be bronze with ultra-high strength engineered resin plug. The plug shall have precision-contoured channels to distribute flow uniformly across valve seat. Bronze stem and high strength resin handwheel and sleeve. Valves shall have a minimum of four full 360° handwheel turns.

E. Valve Sizes 2 ½" – 12":

1. Valve body shall be ductile iron with industrial standard grooved ends. Valve stem and plug disc shall be bronze with ergonomically designed handwheel with multi-turn handwheel adjustments. Sizes 2 ½" and 3" – 5 turns; sizes 4" to 6" – 6 turns; sizes 8" and 10" – 12 turns, and size 12" – 14 turns. Flange adapters shall be supplied, to prevent rotation.

2. The valve shall be installed with flow in the direction of the arrow on the valve body and installed at least five pipe diameters downstream from any fitting, and at least ten pipe diameters downstream from any pump. Two pipe diameters downstream from the valve should be free of any fittings. When installed easy and unobstructed access to the valve handwheel and metering ports for adjustment and measurement are to be provided. Mounting of valve in piping must prevent sediment build-up in metering ports.

F. Single Turn Mini Sweat Size (1/2" to 3/4"):

1. Valve shall be globe style design with bronze body, solder end connection, bronze trim with EPDM plug, high strength resin handwheel with valve position locking inserts, and two ¼" NPT brass metering ports with Nordel check valves and gasketed caps located on both sides of the valve seat.

2. Valve shall be providing three functions:

   a. Precision flow measurement

   b. Precision flow balancing

   c. Positive drip tight shut-off

3. Valve shall provide 360° single turn adjustment range with indicating scale on valve handwheel.

4. The valve shall be installed with flow in the direction of the arrow on the valve body and installed at least five pipe diameters downstream from any fitting, and at least ten pipe diameters downstream from any pump, with two pipe diameters downstream from the valve should be free of any fittings. When installed easy unobstructed access to the valve handwheel and metering ports for adjustment and measurements are to be provided. Mounting of valve in piping must prevent sediment build-up in metering ports.

G. Insulation (1/2" to 6"):

1. Each valve shall be furnished with a pre-formed removable PVC insulation jacket to meet ASTM D 1784/class 14253-C, MEA#7-87, ASTM-E-84 and ASTM-136 with a flame spread rating of 50 or less. There will be provided sufficient mineral fiberglass insulation to meet ASHRAE 90.1-1989 specifications in operating conditions with maximum Fluid Design Operating Temperature Range of 141-200°F and Mean Rating Temperature of 125°F.

H. Approved Manufacturers:

1. Armstrong

2. Griswold

3. Victaulic (Tour and Anderson)

4. Nexus

5. Hays

2.08 FLOW LIMITING CONTROL VALVES PIPING PACKAGES

A. General:

1. The Contractor shall install Hydronic Piping Packages where indicated on drawings.

2. Hydronic Piping Packages shall be factory assembled and leak tested.

3. The Hydronic Piping Packages may include, but are not limited to, ball valves, strainers, flow control valves, unions, 2-way or 3-way temperature control valves, air vents, pressure/temperature ports, drain valves, tees, fire rated hoses, and other components.

B. Isolation Valve with Y-Strainer:

1. Strainer shall be Y-type configuration made of brass. Maximum pressure rating of 400 PSI. Strainer shall include a union end which will accept various end pieces.

2. The body design shall allow inspection or removal of 20 mesh stainless steel strainer without disturbing piping connections.

3. The body design shall allow inspection or repair of handle operated stem without disturbing piping connections. The repairable stem shall include two Teflon seals and one EPDM o-ring for protection against chemicals and modulating temperature.

4. A pressure/temperature test valve and manual air vent shall be standard.

C. Control Valve:

1. Valve housing shall consist of forged brass rated at no less than 360 PSI at 250° F.

2. Valve shall have a blow-out proof stem with two EPDM o-rings with minimum 600 PSI rating.

3. Manufacturer shall be able to provide glass-filled polymer ball insert to make flow control equal percentage.

4. 2-Way Valve: Valve shall have EPDM o-rings behind ball seals to allow for a minimum close-off pressure of 100 PSI with 35 in-lbs of torque for ½" – 2" sized. 3-Way Valve: 40 PSI with 35 in-lbs of torque.

5. Valve shall be available with fixed end female, fixed end sweat or union end connections.

6. 3-Way Valve: Valves shall be installed in Tee configuration with actuator perpendicular to shaft. Valve shall not require elbows of any kind.

D. Valve Actuator:

1. Control valve actuator shall be analog modulating (4-20 mA or 2-10 V), floating (tri-state), Pulse Width Modulation or two positions as indicated in the control sequence.

2. Actuator shall provide minimum torque required for full valve shutoff position.

3. A 3-foot cable shall be provided for installation to electrical junction box.

4. A universal mounting plate shall allow installation of actuators meeting the system electrical requirements and valve torque requirements as provided by Belimo, ELO Drive, Honeywell, Invensys, Johnson Controls, KMC, Neptronics or Siemens. The control valve actuator may be furnished by the control's contractor under Section 23 0900 or by the valve manufacturer.

E. Automatic Balancing Valve:

1. Isolator series valves, sizes ½" through 1½", shall have an ASTM brass alloy body, rated at no less than 365 PSI / 250°F. Isolator series valves, sizes 1½" Large through 3", shall have a CAST brass alloy body, rated at no less than 275 PSI / 250°F. These sizes shall be constructed in a one-piece body or assembled to include a handle ball valve, a flow control cartridge assembly, dual pressure or pressure/temperature test valves for verifying accuracy of flow performance for all sizes combined with a manual air vent, and a union end which will accept various end pieces.

2. The body design shall allow inspection or removal of cartridge or strainer without disturbing piping connections.

3. The body design shall allow inspection or repair of handle operated stem without disturbing piping connections. The repairable stem shall include two Teflon seals and one EPDM o-ring for protection against chemicals and modulating temperature.

4. The valve shall come full assembled and be permanently marked to show direction of flow; shall have a body tag to indicate flow rate and model number.

F. For heat pump hose kit, provide a normally open 2-way control valve, bronze body, quick opening, slow closing for quiet operation eliminating water hammer or chattering. Opening shall be instantaneous; closing shall be field adjustable. Actuator by Controls Contractor.

G. The flex hose shall be flame retardant hoses stainless steel braided over synthetic polymer liner. Length not to exceed 24 inches maximum length. Hoses meet or exceed flame retardant testing per UL #723, NFPA #225, ANSI 2.5, ASTM-E84A and meet or exceed ASTM-D380-83 with working pressure 300 PSI ¾ inch, 225 psi 1 inch, 175 psi 1 ½ inch, 150 psi 2 inch at 200°F.

H. Approved Manufacturers:

1. Griswold

2. Victaulic

3. Nexus

4. Hays

2.09 PRESSURE INDEPENDENT PIPING PACKAGES

A. General:

1. Hydronic Piping Packages shall be factory assembled and leak tested.

2. The Hydronic Piping Packages may include, but are not limited to, ball valves, strainers, flow control valves, unions, 2-way temperature control valves, air vents, pressure/temperature ports, drain valves, tees, fire rated hoses, and other components.

B. Isolation Valve with Y-Strainer:

1. Strainer shall be Y-type configuration made of brass. Maximum pressure rating of 365 PSI. Strainer shall include a union end which will accept various end pieces.

2. The body design shall allow inspection or removal of 20 mesh stainless steel strainer without disturbing piping connections.

3. The body design shall allow inspection or repair of handle operated stem without disturbing piping connections. The repairable stem shall include two Teflon seals and one EPDM o-ring for protection against chemicals and modulating temperature.

4. A pressure/temperature test valve and manual air vent shall be standard.

C. Pressure Independent Actuated Ball Valves and Cartridge:

1. The modulating control valves shall be pressure independent and shall include a Pressure Compensating Cartridge, Actuated Ball Valve and Manual Isolation Ball in a single valve housing.

2. Valve housing shall consist of forged brass, rated at no less than 360 PSI at 250° F.

3. Valve shall have a fixed end or union end connection with factory installed air vent to allow for venting of the coil or heat pump.

4. Dual pressure/temperature test valves for verifying the pressure differential across the cartridge and flow limiting ball shall be standard.

5. A flow tag shall be furnished with each valve.

D. Pressure Compensating Cartridge:

1. PCC shall automatically compensate for pressure changes in valve and shall maintain a constant pressure drop across the flow limiting actuated ball.

2. The operating pressure range shall be available with the minimum range requiring 5.8 PSID to actuate the mechanism.

3. Valve internal control mechanism includes a diaphragm and full travel linear coil spring.

4. Valves shall include an accessible/replaceable cartridge.

E. Actuated Flow Limiting Ball Valve:

1. Valve ball shall consist of chemically plated nickel brass or stainless steel.

2. Actuated stem shall be removable/replaceable without removing valve from line.

3. Manufacturer shall be able to provide ball insert to limit flow to maximum flow rate with ±5% accuracy.

4. Valve shall have EPDM o-rings behind the seals to allow for a minimum close –off pressure of 100 PSI with 35 in-lbs of torque for ½” – 3” sizes.

5. The actuator and plate can be rotated after mounting.

6. A universal mounting plate shall allow installation of actuators meeting the system electrical requirements and valve torque requirements as provided by Belimo, ELO Drive, Honeywell, Invensys, Johnson Controls, KMC, Neptronics or Siemens. The control valve actuator may be furnished by the control’s contractor or by the Pressure Independent Control Valve manufacturer.

F. The flex hose shall be flame retardant hoses stainless steel braided over synthetic polymer liner. Length not to exceed 24 inches maximum length. Hoses meet or exceed flame retardant testing per UL #723, NFPA #225, ANSI 2.5, UBC 42-1, ASTM-E84A and meet or exceed ASTM-D380-83 with working pressure 300 PSI ¾ inch, 225 psi 1 inch, 175 psi 1-1/2, 150 psi 2 inch at 200°F.

G. Approved Manufacturers:

1. Griswold

2. Victaulic / Tour & Andersson

3. Nexus

2.10 TRIPLE DUTY VALVE

A. Furnish and install valve designed to perform the functions of a non-slam check valve, throttling valve, shut off valve, calibrated balancing valve and system flowmeter.

1. The valve shall be of heavy-duty cast iron construction with standard 125 psig at 250°F. The valve shall be fitted with (Bronze (hard seat) or EPDM (soft seat) seat, replaceable bronze disc, stainless steel stem and chatter-preventing spring. The valve design shall permit repacking under full system pressure.

2. Each valve shall be equipped with brass read-about valves (with integral check valve) for taking differential pressure readings across the orifice to accurately balance the system to specified design conditions.

3. Providing the individual components to perform all of the above functions if space allows.

B. In lieu of triple duty valves, furnish and install Victaulic tri-service valve assembly providing shutoff, throttling, and non-slam check service in one unit. Valve shall be a combination of Victaulic Vic®-300 MasterSeal™ butterfly valve and Series 716 or Series 779 venturi-check with flow measurement capabilities, assembled with Victaulic couplings (style to be determined by system requirements), maximum pressure rating 300 psig. Tri-Service valve assemblies 14” through 24” sizes shall be Vic®-300 AGS butterfly valve and Series W715 dual disc design check valve assembled with AGS “W” series couplings, with a maximum pressure rating of 230 psig.

C. Approved Manufacturers:

1. Armstrong

2. Taco

3. Wheatley

4. Victaulic

2.11 PRESSURE RELIEF VALVE

A. ASME rated. Size per ASME, and local code.

B. Angle type with iron body, brass trim and screwed end connections.

C. Approved Manufacturers:

1. Watts

2. Conbraco

2.12 VALVE FEATURES

A. General - Provide valves with features indicated and where not otherwise indicated, provide proper valve features as outlined in this specification. Comply with ANSI B31.1.

1. Flanged: Valve flanged complying to ANSI B16.1 (cast iron), ANSI B16.5 (steel), or ANSI B16.24 (bronze).

2. Threaded: Valve ends complying with ANSI B2.1.

3. Butt-Weld: Valve ends complying with ANSI B16.25.

4. Solder Joint: Valve ends complying with ANSI B16.18.

5. Flangeless: Valve bodies manufactured to fit between flanges complying with ANSI B16.1 (cast iron), ANSI B16.5 (steel), or ANSI B16.24 (bronze).

6. Wafer: Flangeless valves.

7. Trim: Fabricate pressure-containing components of valves, including stems and seats from brass or bronze materials, of standard alloy recognized in valve manufacturing that resists de-zincification.

8. Non-Metallic Disc: Non-metallic material selected for service indicated in accordance with manufacturer's published literature.

9. Renewable Seat: Design seat of valve with removable disc, and assemble valve so disc can be replaced when worn.

10. Bonnet: Part of gate or globe valve through which stem passes to valve body, and attached to valve body by threads, bolts, union, or welding.

11. Solid Wedge: One-piece tapered disc in gate valve, designed for contact with both sides.

12. Outside Screw and Yoke (OS&Y): Stem and handwheel designed to rotate without rising when valve is operated from closed to open position.

13. Tight Shutoff: Butterfly valve designed for flow regulation, and manufactured to be tight in closed position. Test pressures in accordance with MSS SP-67 as follows: Seat 2-12" 220 psi. No leakage permitted under test.

14. Low Leakage: Butterfly valve designed for flow regulation and manufactured with minimum leakage tolerance in closed position.

15. Grooved: Ductile iron body complying to ASTM A536 with a PPS coating.

PART 3 - EXECUTION

3.01 INSTALLATION

A. General: Except as otherwise indicated, comply with the following requirements.

B. Install valves where required for proper operation of piping and equipment, including valves in branch lines where necessary to isolate sections of piping. Locate valves so as to be accessible and so that separate support can be provided when necessary.

C. Install valves with stems pointed up, in vertical position where possible, but in no case with stems pointed downward for horizontal plane unless unavoidable.

1. Applications Subject to Shock: Install valves with bodies of metal other than cast iron where thermal or mechanical shock is indicated or can be expected to occur.

2. Selection of Valve Ends (Pipe Connections): Except as otherwise indicated, select and install valves with the following ends or types of pipe/tube connections:

a. Tube Size 2" and Smaller: Soldered-joint valves.

b. Pipe Size 2" and Smaller: One of the following at installer's option:

1) Threaded Valves

2) Grooved-end Valves

c. Pipe Size 2-1/2" and Larger: One of the following at installer's option:

1) Threaded end Valves

2) Butt-weld end Valves

3) Flanged end Valves

4) Wafer Type Valves

5) Mechanical joint end Valves

6) Grooved end Valves

D. Unless indicated otherwise on plans, install Flow limiter piping packages on all hydronic equipment with 3-way control valves and/or coil flows 5.0 GPM or less.

E. Install Pressure Independent piping packages on all 2-way control valves for hydronic equipment with coil flows greater than 5.0 GPM.

3.02 INSTALLATION OF CHECK VALVES

A. Swing Check Valves: Install in horizontal position, unless otherwise shown on drawings, with hinge pin horizontally perpendicular to centerline of pipe. Install for proper direction of flow.

3.03 VALVE DIAGRAM

A. Provide two (2) Valve Diagrams showing the location of all valves relative to the floor plan of the building. Each Valve Diagram shall be 11x17, hard laminated sheets. Each piping system shall be in a unique color and a legend noting the system colors shall be placed on the first page. Provide a non-laminated copy for the O&M Manual.

END OF SECTION

SECTION 23 0529

HANGERS AND SUPPORTS FOR HVAC PIPING AND EQUIPMENT

PART 1 - GENERAL

1.01 GENERAL

A. Includes:

1. Pipe Hangers and Supports
2. Duct Hangers and Supports
3. Mechanical Equipment Anchors and Supports

1.02 RELATED SECTIONS

A. General Conditions, Division 1

B. Section 20 0000 – General Mechanical Requirements

C. Section 22 2000 – Excavation & Backfill for Mechanical Underground Utilities

D. Section 23 0548 – Vibration and Seismic Control

E. Section 23 0719 – HVAC Piping Insulations

F. Section 23 1119 – HVAC Piping Specialties

G. Section 23 2000 – Hydronic System

H. Section 23 2300 – Refrigerant Piping

1.03 QUALITY ASSURANCE

A. Pipe Hanger Standards: (MSS) Manufacturers Standardization Society Standards SP-58-2002, SP-89-2003, and SP-69-2003.

B. All methods, materials, and workmanship shall conform to the International Building Code (IBC) and International Mechanical Code (IMC), as amended and adopted by the authority having jurisdiction.

1.04 SUBMITTAL REQUIREMENTS OF THIS SECTION

A. Hangers

B. Struts

C. Anchors

D. Shop drawings are required for all equipment supports and fabricated supports or assemblies.

1.05 OPERATION AND MAINTENANCE OF THIS SECTION

A. Not Applicable

PART 2 - PRODUCTS

2.01 APPROVED MANUFACTURERS

A. Hangers and Supports: Elcen, Grinnell, B-Line Systems, Unistrut, Caddy, Tolco, PHD

B. Anchors: Rawplug, Phillips, Hilti, Caddy, Powers

C. Rooftop Support Systems: Miro Industries, Inc

2.02 GENERAL HANGERS AND SUPPORTS

A. Hanger Rods: Threaded hot rolled steel, electro-galvanized or cadmium plated. Hanger rods shall be sized so that the total load (including pipe or duct, insulation, hangers, and fluid) does not exceed the following:

Nominal Rod Diameter	Maximum Load
3/8 Inch	610 Pounds
1/2 Inch	1130 Pounds

B. Hanger Straps: Galvanized steel. Straps shall be sized so that the total load does not exceed the following:

Strap Size	Maximum Load
1” x 22 Gauge	230 Pounds
1” x 20 Gauge	290 Pounds
1” x 18 Gauge	380 Pounds
1” x 16 Gauge	630 Pounds

C. Beam Attachments: Shall be of the following type:

MSS Type	Elcen Figure No.	Grinnel Figure No.
21	33, 34	131
22	67	66
23	29A	87
28	95	292, 228
30	95	229

D. Anchors: Masonry anchors shall be Phillips wedge anchors, Phillips "Red Head" or Rawl "Saber-Tooth".

E. Steel: Structural steel, per ASTM A36.

F. Wood: Shall be fire treated.

2.03 PIPE HANGERS AND SUPPORTS

A. All hangers used directly on copper pipe shall be copper plated or have a factory applied 1/16-inch thick (minimum) plastic coating on all contact surfaces.

B. Riser clamps shall be epoxy coated.

C. All other hangers, supports, and hardware shall be cadmium plated or galvanized.

D. Fire sprinkler supports shall comply with NFPA-13.

E. Pipe Hangers and Supports: Shall be of the following type (numbers are 'MSS'):

Maximum System Temperature	Insulated Pipe Type
120 to 450 Degrees	1, 3, 7, 9, 10, 41, 42, 43, 44, 45, 46, E
60 to 120 Degrees	1, 3, 7, 9, 10
33 to 59 Degrees	1, 3, 5, 7, 9, 10, 41, 42, 43, 44, 45, 46, E

F. Vertical Pipe Supports: MSS Type 8 riser clamp (Elcen Fig. 39 and 339; Grinnel Fig. 261 and 261C).

G. Trapeze Hangers: Shall be constructed of carbon steel angles, channels, or other structural shapes with flat surface for point of support. Trapeze hangers shall be supported with hanger rods suspended from concrete inserts or approved structural clips. Provide a steel washer plate (Elcen Fig. 84 or equal) where hanger rod nuts bear on trapeze hanger.

H. Insulated Pipe Inserts and Insulation Shields:

1. Insulation material at pipe insert shall be calcium silicate with jacket of nylon reinforced kraft paper bonded to aluminum foil cover on insulation. Insulated pipe insert shall have no more than 5% deformation at 100 psi and a thermal conductivity no more than 0.38 Btu/hr./sq. ft./degree F/1-inch thick at 75°F.

2. Insulated pipe insert shall be same thickness as adjoining pipe insulation and sized to match pipe in which it is used on. See Section 23 0719 for insulation sizes.

3. Provide shield per Section 23 1119 HVAC Piping Specialties.

4. Manufacturers:

   a. TPS Thermal Pipe Shields

   b. B-Line

c. Clement Support Services

2.04 REFRIGERANT PIPE HANGERS AND SUPPORTS

A. All horizontal refrigerant pipe shall utilize clevis, strut-mounted, or trapeze style supports.

B. All hangers, supports, and hardware shall be cadmium-plated or galvanized where used indoors, and galvanized where used outdoors.

C. Secure refrigerant pipe to strut channel using either of the following:

1. Snap in Shield Supports:

a. Polypropylene Copolymer construction.

b. Rated for an operating temperature of -40°F to 178°F.

c. Material shall be paintable.

d. UL 723 (ASTM E 84) listed.

e. Meets UL 94 HB flammability standards.

f. Approved Manufacturers:

1) Eaton Snap ‘N Shield

2) TB Concept, Inc. Insuguard

2. Insulated Pipe Inserts and Insulation Shields:

a. Insulation material at pipe insert shall be calcium silicate with jacket of nylon reinforced Kraft paper bonded to aluminum foil cover on insulation. Insulated pipe insert shall have no more than 5% deformation at 100 psi and a thermal conductivity no more than 0.38 Btu/hr./sq. ft./degree F/1-inch thick at 75°F.

b. Insulated pipe insert shall be same thickness as adjoining pipe insulation and sized to match pipe in which it is used on. See Section 23 0719 for insulation sizes.

c. Provide shield per Section 23 1119 HVAC Piping Specialties.

d. Manufacturers:

1) TPS Thermal Pipe Shields

2) B-Line

3) Clement Support Services

D. Trapeze Hangers: Shall be constructed of carbon steel strut supports. Trapeze hangers shall be supported with hanger rods suspended from approved structural clips. Provide a steel washer plat (Elcen Fig. 84 or equal) where hanger rod nuts bear on trapeze hanger.

E. Clevis Hangers:

1. ANSI/SP-69 and SP-58 (Type 1).

2. Provide with electro-galvanized finish.

3. Install snap-in shield, or insulated pipe inserts, and insulation shields at each clevis hanger support.

4. Snap in shields shall comply with the following requirements:

a. Material: Polypropylene

b. UL-723 (ASTM E 84) and UL-2043

c. Service Temperature: -40°F to 178°F

d. Approved Manufacturers:

1) Eaton Snap ‘N Shield

2) TB Concept Inc. Insuguard

5. Insulated Pipe Inserts and Insulation Shields:

a. Insulation material at pipe insert shall be calcium silicate with jacket of nylon reinforced Kraft paper bonded to aluminum foil cover on insulation. Insulated pipe insert shall have no more than 5% deformation at 100 psi and a thermal conductivity no more than 0.38 Btu/hr./sq. ft./degree F/1-inch thick at 75°F.

b. Insulated pipe insert shall be same thickness as adjoining pipe insulation and sized to match pipe in which it is used on. See Section 23 0719 for insulation sizes.

c. Provide shield per Section 23 1119 HVAC Piping Specialties.

d. Manufacturers:

1) TPS Thermal Pipe Shields

2) B-Line

3) Clement Support Services

6. Approved Manufacturers:

a. Caddy

b. PHD, Inc.

c. B-Line

F. Vertical refrigerant pipe supports shall utilize struts with cushion clamps.

1. Cushion Clamps:

a. Temperature: -65°F to 275°F

b. Yellow trivalent plated mild steel

c. Provide with nylon locknut washer

d. Approved Manufacturers:

1) Holdrite

2) BlueRidge

3) Caddy

4) PHD, Inc.

2.05 DUCT HANGERS AND SUPPORTS

A. Hangers: As shown in SMACNA HVAC Duct Construction Standards.

B. Vertical Duct Supports at Floor: 1-1/2" x 1-1/2" x 1/8" (minimum) galvanized steel angle and to support ducts, as shown in SMACNA HVAC Duct Construction Standards Figure 4-6. For ducts over 30 inches wide, provide riser reinforcing with hanger rods between the riser support and riser reinforcing.

C. Vertical Duct Supports at Wall: 1-1/2" x 1/8" (minimum) strap or 1-1/2" x 1-1/2" x 1/8" (minimum) angle bracket and as shown in SMACNA HVAC Duct Construction Standards Figure 4-7.

D. Hanger Attachments to Structure: As shown in SMACNA HVAC Duct Construction Standard Figures 4-1, 4-2, 4-3 to suit building construction and as allowed on structural drawings. Where C-clamps are provided, retainer clips shall be used. Friction beam clamps shall not be used.

E. Hanger Attachments to Ducts: As shown in SMACNA HVAC Duct Construction Standards Figure 4-4.

PART 3 - EXECUTION

3.01 INSTALLATION - GENERAL

A. Provide all necessary bolts, nuts, washers, turnbuckles, rod connectors, and any other miscellaneous accessories required for the support and anchoring of all pipes, ducts, and mechanical equipment.

B. Install steel or wood backing in walls (anchored to studs) as required to provide support for items hung from walls.

C. Install concrete inserts and anchors in accordance with manufacturer's instructions.

D. All welded steel support assemblies shall have a power wire brush and primer paint finish.

E. Maximum spans between piping supports may be significantly less than the maximum spans allowed herein due to structural limitations of allowable loads on hangers. The most restrictive criteria shall govern. Reference structural drawings.

3.02 INSTALLATION OF PIPE HANGERS AND SUPPORTS

A. Use of zip ties or plastic straps is strictly prohibited.

B. Insulation shall be continuous at pipe hangers and supports. Insulation may only be broken at vertical pipe supports where insulated cushion clamps are utilized.

C. Above ground pipe shall be adequately anchored to the structure to prevent sagging and to keep pipe in alignment.

D. All pipe supports shall be provided with a means of adjustment for the aligning and leveling of the pipe after installation.

E. Installation and sizing of pipe supports and accessories shall be in accordance with the manufacturer’s recommendations and standard MSS SP-89 and MSS SP-69, NFPA #13 for fire protection piping, UPC, and IMC.

F. Provide supports at each change in direction of piping.

G. Where mechanically coupled piping is used, a hanger shall be placed within 2 feet on each side of couplings, with hanger spacing in no case to exceed the following:

Nominal Pipe Diameter	Maximum Span Mechanically Coupled Piping
¾ to 1 Inch	7 Feet
1 ¼ to 1 ½ Inch	7 Feet
2 Inches	10 Feet
2 ½ Inches	10 Feet
3 Inches and Larger	12 Feet

NOTE: Manufacturer's support instructions shall be used where it is more restrictive than the above. Above is for rigid coupled piping systems. Follow manufacturer's requirements for a flexible piping system, except that, in no case is spacing to be more than the above.

H. Steel Pipe: Maximum spacing between supports:

Nominal Pipe Diameter	Maximum Span Steel Pipe
½ Inch	6 Feet
¾ to 1 Inch (¾ Inch to 1 Inch*)	8 Feet
1 ¼ to 2 ½ Inch (1 ¼ Inch or Larger*)	10 Feet
3 Inches and Larger	12 Feet

*Gas piping.

I. Copper Tubing: Maximum spacing between supports:

Nominal Tubing Diameter	Maximum Span Copper
½ Inch	5 Feet
¾ to 1 ¼ Inch	6 Feet
1 ½ to 2 ½ Inch	8 Feet
3 Inches and Larger	10 Feet

J. Soft Copper Pipe: Maximum spacing between supports:

Nominal Tubing Diameter	Maximum Span of Soft Copper
All Sizes	5 Feet

K. Vertical Piping Supports: Support piping at each floor line with pipe clamps and at intermediate points as required to prevent excessive pipe movement and so as to comply with the maximum spacings cited above. Support all pipe stacks at their bases with a concrete pier or suitable hanger. For vertical pipe drops which occur away from a wall or similar anchoring surface, provide angled bracing from nearest structure to provide rigid anchoring of pipe drop. Any pipe requiring insulation shall use an insulated pipe insert at pipe clamp with 360° shield.

L. Insulated Pipe Insert and Insulation Shields: Protect insulated pipe at point of support with pipe insert and shield as required by the following table:

Nominal Pipe Diameter in Inches	Insert Length in Inches**	Shield Length in Inches	Minimum Shield Gauge
½ to 1½*	6	6	20
2 to 3 ½	6	6	20
4 to 5	9	9	18
6 to 10	9	9	18

*Insulated pipe inserts and shields may be omitted for pipe supported from the bottom.
**Inserts shall be in place at the time of installing pipe.

M. Underground Pipe: Shall be evenly supported on approved bedding materials, as specified for the type of piping being used. Such bedding and backfilling shall be as specified in Section 22 2000.

3.03 INSTALLATION OF DUCT HANGERS AND SUPPORTS

A. Provide anchors and supports for all ductwork.

B. Rectangular Duct: Supports and hangers shall be of size and spacing as shown in SMACNA HVAC Duct Construction Standards for the appropriate class of duct. (Hangers maximum allowable loads shall not be as shown in SMACNA Tables but shall be as specified in these specifications.)

C. Round Duct: Supports and hangers shall be of size and spacing as shown in SMACNA HVAC Duct Construction Standards for the appropriate class of duct.

D. Maximum Hanger Spacing (provided duct gauge and reinforcement comply with SMACNA Standards for such spacing):

Duct Area	Maximum Spacing
Up to 4 sq. ft. (27” Diameter)	8 Feet
4.1 to 10 sq. ft. (28” to 42” Diameter)	6 Feet
10.1 sq. ft. and up (43” Diameter and up)	4 Feet

E. Provide supports at each change in direction of duct. Locate hangers at inside and outside corners of elbows, or at each end of fitting, on each side.

F. Provide additional supports at each side concentrated loads (such as modulating dampers, duct heaters, sound attenuators, etc.)

G. Provide supports for exterior ductwork per SMACNA HVAC Duct Construction Standards or as detailed on the drawings.

3.04 CEILING AIR TERMINALS/SERVICES

A. Ceiling mounted air terminals or services weighing less than 20 pounds shall be positively attached to the ceiling suspension main runners or to cross runners with the same carrying capacity as the main runners.

B. Terminals or services weighing 20 pounds but not more than 56 pounds in addition to the above shall have two No. 12 gauge hangers connected from the terminal or service to the ceiling system hangers or to the structure above. These wires may be slack.

C. Terminals or services weighing more than 56 pounds shall be supported directly from the structure above by approved hangers.

D. All air terminals that use side inlet "plenums" or have fire dampers shall be supported directly from the structure with approved hangers (regardless of total weight).

3.05 INSTALLATION OF MECHANICAL EQUIPMENT ANCHORS AND SUPPORTS

A. Provide anchoring and supports for all mechanical equipment.

B. Heating, Ventilating and Air Conditioning equipment where suspended from structure shall be supported per SMACNA HVAC Duct Construction Standards or as shown on the drawings.

C. Roof mounted equipment shall be installed on roof curbs provided with the equipment (unless indicated otherwise). Such equipment shall be anchored to the curb, with the curb anchored to the building structure.

D. Equipment shall be supported and anchored in such a way so that no equipment vibration is transmitted to the building structure.

E. Added supports and bracing shall be provided per Section 23 0548.

F. Provide curbing as shown on drawings and as required to support all mechanical equipment.

END OF SECTION

SECTION 23 0548

VIBRATION AND SEISMIC CONTROL

PART 1 - GENERAL

1.01 GENERAL REQUIREMENTS

A. This section includes, but not limited to vibration isolation and seismic restraint installation for all equipment, ductwork, and piping as described here-in.

B. Seismic Restraints shall be bidder-designed. Seismic Design Criteria are to be established per the International Building Code and ASCE along with Project Structural drawings.

C. Items not included in this specification shall not relieve the contractor of the responsibility of providing seismic bracing that meets all the criteria required by the referenced codes and in accordance with the seismic design guidelines and the project structural drawings.

1.02 REFERENCED CODE AND STANDARDS

A. The latest adopted versions of the following codes and standards apply to this section.

1. International Building Code (IBC)

2. National Fire Protection Association (NFPA-13)

3. Seismic Restraint Manual – Guidelines for Mechanical Systems (SMACNA)

4. ASCE 7-10, American Society of Civil Engineers “Minimum Design Loads for Buildings and Other Structures”

5. Applicable Project Structural Drawings for Seismic Design Criteria

6. Applicable Manufacturer’s Seismic Design Guides for proprietary listed seismic bracing and mounting hardware

7. Where there is a conflict in requirements between these guidelines and above-mentioned codes the more stringent parameters shall prevail.

1.03 RELATED SECTIONS

A. General Conditions, Division 1 and Division 23

B. Section 20 0000 – General Mechanical Requirements

1.04 DESIGN CRITERIA

A. Occupancy Category of Structure (I-IV) per IBC or ASCE

B. Component Importance Factor (I_p) per ASCE

C. Mapped Acceleration Parameters (S_1 and (S_s) per IBC and Project Structural Drawings

D. Site Class (A – F) per IBC and Project Structural Drawings

E. Site Coefficient (F_a) per IBC and Project Structural Drawings

F. Site Coefficient (F_v) per IBC and Project Structural Drawings

G. Seismic Design Category (A – D) based on Short Period Response Accelerations per IBC and Project Structural Drawings

H. Seismic Design Category (A – D) based on 1-Second Period Response Acceleration per IBC and Project Structural Drawings

I. Amplification Factor a_p per ASCE

J. Response Modification Factor R_p per ASCE

1.05 SUBMITTAL REQUIREMENTS

A. Isolation Pads

B. Spring Isolators

C. Seismic Control:

1. Include design calculations and details for selecting seismic restraints complying with performance requirements, design criteria, and analysis data signed and sealed by the qualified professional engineer responsible for their preparation.

2. Design Calculations: Calculate static and dynamic loading due to equipment weight, operation, seismic, and wind forces required to select vibration isolators, seismic and wind restraints.

   a. Coordinate design calculations with wind load calculations required for equipment mounted outdoors. Comply with requirements in other sections for equipment mounted outdoors.

3. Seismic and Wind Restraint Details:

   a. Design Analysis: To support selection and arrangement of seismic and wind restraints. Include calculations of combined tensile and shear loads.

   b. Details: Indicate fabrication and arrangement. Detail attachments of restraint to the restrained items and to the structure. Show attachment locations, methods, and spacing's. Identify components, list their strengths, and indicate directions and values of forces transmitted to the structure during seismic events. Indicate association with vibration isolation devices.

   c. Coordinate seismic-restraint and vibration isolation details with wind-restraint details required for equipment mounted outdoors.

4. Periodic Special Inspections: The mechanical contractor shall provide a list of components/systems requiring periodic special inspections per IBC.

5. Special Certification Requirements: Each contractor responsible for the construction of a "Designated Seismic System" for active mechanical equipment that must remain operable following the design earthquake, or components with hazardous contents certified by the manufacturer to maintain containment following the design earthquake shall submit a Manufacturer's Certificate of Compliance for review and approval by the Registered Design Professional responsible for the design of the system. This information shall then be submitted to the AHJ.

6. All brace or restraint components, mounting devices, snubbers and anchors.

1.06 OPERATION AND MAINTENANCE REQUIREMENTS OF THIS SECTION

A. Not Applicable

PART 2 - PRODUCTS

2.01 NEOPRENE ISOLATORS

A. Isolation Pads: Oil resistant neoprene pads, minimum ¼-inch thick, with cross-ribbed or waffle design. Size pads for not more than 50 psi or as recommended by vibration isolator manufacturer.

B. Floor Mounted Isolators: Double deflection type neoprene mounts, having minimum deflection of 0.35 inch. All metal surfaces shall be neoprene covered, base plate shall have mounting holes, and top shall have threaded steel plate or threaded steel insert. Element shall be color coded or labeled with molded symbols to identify capacity. Mason Series ND, Amber Booth "RV" or approved.

C. Suspension Isolators: Shall be double deflection neoprene type, with isolator encased in open steel bracket and minimum 3/8-inch deflection. Hanger rod shall be isolated from steel bracket with neoprene grommets. Mason Series HD, Amber Booth "BRD" or approved.

2.02 SPRING ISOLATORS

A. General: The load carried by each isolator shall be carefully calculated and isolators selected so that the static deflection will be the same and the supported equipment will remain level. Isolators shall be so designed that the ends of the springs will remain parallel during and after deflection to operating height. At operating height, springs shall have additional travel to complete (solid) compression equal to at least 50 percent of the operating deflection. Suspension isolator springs shall have a static deflection (as shown on drawings) not less than 1-1/2", except that for units with components rotating at 1000 rpm and less, the static deflection shall be not less than 2 inches. Floor isolator springs shall have deflection of not less than 1 inch. All isolators shall provide at least 96% isolation efficiency. Note: Deflections other than these may be used where circumstances warrant and more optimum isolation results can be achieved.

B. Floor Type Spring Isolators: Shall be open spring type with approximate ratio between horizontal and vertical spring constant of 1.0. A ribbed neoprene acoustical friction pad shall be bonded to the underside of the isolator. Provide with height saving bracket.

1. Approved Manufacturers:

a. Mason Series SLF

b. Amber Booth "SW" or approved

C. Floor Housed Type: Housed spring isolator with ductile iron housing, steel base plate with mounting holes, spring inspection ports, neoprene cushion, leveling screws.

1. Approved Manufacturers:

a. Mason Series SSLFH

b. Amber Booth "XLS" or approved

D. Suspension Type Spring Isolators: Shall consist of a rigid steel frame, a stable steel spring in the bottom part of the frame, and double deflection neoprene isolating pad at the top of the frame. Where supporting rods pass through the frame, a clearance of not less than on half rod diameter shall be provided all around the rod.

1. Approved Manufacturers:

a. Mason Series DNHS

b. Amber Booth "BSSR" or approved

2.03 SEISMIC RESTRAINTS

A. General:

1. All seismic hangers and components shall be domestically made. Products designed domestically and fabricated in a foreign country are prohibited.

2. Products not permitted include: powder actuated anchors, gas actuated anchors, or anchors requiring epoxy.

3. Only Steel or Ductile Iron components shall be provided. No Cast Iron or Cast Aluminum components are allowed.

4. Steel shall be per ASTM A36; hangers and other devices shall be as shown in “SMACNA Seismic Restraint Manual” or approved manufacturers seismic design guidelines.

B. Seismic Bracing (rigid and cable):

1. Approved Manufacturers:

a. Tolco

b. International Seismic Application Technology (ISAT)

c. Mason Industries

d. Cooper B-Line

e. Kinetics Noise Control

f. AFCON

g. Gripple

h. PHD

i. Unistrut

j. Anvil or prior approved equal

C. Seismic Anchorages (for wood, steel and concrete):

1. Approved Manufacturers:

a. Hilti

b. ITW Ramset/Red Head

c. ITW Buildex

d. Mason Industries

e. Tolco, AFCON

f. Simpson Strong-Tie

g. Powers Fasteners, Inc. or prior approved equal

D. Flexible Connectors:

1. Approved Manufacturers:

a. Mason Industries

b. Metraflex

c. Victaulic

d. Kinetics Noise

e. International Seismic Application Technology (ISAT) or prior approved equal

E. Pipe Hanger Components:

1. Approved Manufacturers:

a. Tolco

b. International Seismic Application Technology (ISAT)

c. Mason Industries

d. Cooper B-Line

e. Kinetics Noise Control

f. AFCON

g. Gripple

h. PHD

i. Unistrut

j. Anvil or prior approved equal

PART 3 - EXECUTION

3.01 VIBRATION ISOLATION

A. Motorized equipment shall be mounted on or suspended from spring vibration isolators either integral or external to the equipment. Floor mounted or suspended isolators.

B. Unless otherwise indicated, resilient mounts for motorized equipment shall be of the type and size to provide maximum ten percent transmissibility. Use unhoused, free-standing stable steel springs which are preferred over housed spring assemblies. The horizontal stiffness of the spring shall be approximately equal to its vertical stiffness. The spring deflection shall be selected based on the equipment power range (HP), speed range (RPM), and static deflection of the supporting structural floor. It is a specific recommendation that whenever a steel spring is used, two pads of ribbed waffle-pattern neoprene be used in series with the spring.

C. The design of vibration dampening shall consider lateral load as well as vertical load and be suitably snubbed against earthquake forces.

D. A list of isolators accompanied by certified transmissibility ratings for the required duty shall be submitted for each item of equipment.

E. Unless noted otherwise, all vibration isolating equipment shall be of the same make and shall be submitted as one group.

F. All piping in the mechanical equipment rooms connected to vibrating equipment shall be supported from resilient ceiling hangers or from floor mounted resilient supports.

G. Special equipment, such as boilers, etc., shall be selected on an individual basis.

H. Inertia bases shall be provided for all equipment with rotating or reciprocating parts when such equipment is located above occupied spaces and for equipment where the motor is separate from equipment. Bases shall be constructed of welded steel angles and channel frame filled solid with structural concrete with #4 rebar at 6 inches on center spanning short dimensions.

3.02 SEISMIC BRACING GENERAL REQUIREMENTS

A. Support and bracing from the structure to pipes, ducts and mechanical equipment shall conform to ASCE and the plumbing & HVAC industry standard SMACNA “Seismic Restraint Manual, Guidelines for Mechanical Systems” or approved manufacturer’s listed seismic assemblies.

B. Provide snubbers for all equipment that is supported on isolators and weighing over 400 lbs. including base. Provide minimum of four snubbers for equipment weighing less than 2,000 lbs., and eight snubbers for heavier equipment.

C. Curb-mounted rooftop units shall be provided with suitable bracing on four sides connecting unit with curb to prevent excessive movement in a seismic event. The contractor is responsible for proper seismic attachment of the rooftop curb to building structure.

D. Housekeeping pads shall be properly anchored to the roof deck or floor per ASCE.

3.03 SEISMIC BRACING GENERAL REQUIREMENTS - PIPING

A. When determining horizontal load requirements, consider all pipes full of water and maximum equipment heights unless calculated for other substances and equipment.

B. Seismic bracing shall not limit the expansion and contraction of the piping system. When thermal expansion or contraction is involved, longitudinal bracing shall be designed at the anchor point of the piping system. The longitudinal bracing and the connections must be capable of resisting the additional force induced by expansion and contraction.

C. Seismic bracing for fire sprinkler system piping and riser components shall be as specified per Division 21.

3.04 INSTALLATION

A. Installation of seismic restraints shall be as follows:

1. Upon completion of installation of all seismic restraint materials and before start up of restrained equipment, all debris shall be cleaned from beneath all protected equipment, leaving equipment free to contact snubbers.

2. All external utility connections to restrained equipment shall be designed to allow differential seismic motion without damage to the equipment or utility connections.

3. Adjust isolators and restraints after piping systems have been filled and equipment is at its operating weight, following manufacturer’s written instructions.

4. After equipment installation is completed, adjust limit stops following manufacturer’s written instructions so they are out of contact during normal operation.

5. Adjust snubbers according to manufacturer's written instructions.

6. Torque anchor bolts according to anchor manufacturer's written instructions to resist seismic forces.

7. Attach piping to the trapeze per seismic restraint manufacturer’s design. Install cables so they do not bend across sharp edges of adjacent equipment or building structure.

8. Install vertical braces to stiffen hanger rods and prevent buckling per seismic restraint manufacturer’s design. Clamp vertical brace to hanger rods. Requirements apply equally to hanging equipment. Do not weld vertical braces to rods.

9. Housekeeping Pads must be adequately reinforced and adequately sized for proper installation of equipment anchors. Refer to seismic restraint manufacturer's written instructions

3.05 SPECIAL INSPECTIONS

A. When required continuous or periodic special inspections of the equipment and systems designated on the list provided by the mechanical contractor shall be performed in accordance with the IBC and ASCE. The owner shall reserve the right to employ an approved special inspector.

B. Per the IBC, the registered design professional in responsible charge may designate members of the A&E team to act as special inspectors provided those personnel meet the qualification requirements of the IBC to the satisfaction of the building official.

END OF SECTION

SECTION 23 0553

MECHANICAL IDENTIFICATION FOR HVAC PIPING AND EQUIPMENT

PART 1 - GENERAL

1.01 DESCRIPTION

A. General Requirements: Drawings and general provisions of the Contract, including General and other Conditions and Division 1 - General Requirements sections, apply to the work specified in this Section.

1.02 STANDARDS

A. ANSI Compliance: Comply with ANSI A13.1 for lettering size, colors, and installed viewing angles of identification devices.

1.03 SCHEDULES

A. Submit Valve Schedule for each piping system, typewritten, and reproduced on 8-1/2" x 11" bond paper. Tabulate valve number, piping system, system abbreviation (as shown on tag), location of valve (room or space), and variations for identification (if any). Mark valves which are intended for emergency shut-off and similar special uses, by special "flags", in margin of schedule. Provide a framed copy of Valve Tag Schedule in the mechanical/janitors room.

1.04 OPERATION AND MAINTENANCE REQUIREMENTS OF THIS SECTION

A. Not Applicable

PART 2 - PRODUCTS

2.01 APPROVED MANUFACTURERS

A. Not Applicable

2.02 PLASTIC PIPE MARKERS

A. Provide manufacturer's standard preprinted, flexible or semi-rigid, permanent, color-coded, plastic sheet pipe markers.

1. Insulation: Furnish 1" thick molded fiberglass insulation with jacket for each plastic pipe marker to be installed on uninsulated pipes subjected to fluid temperatures of 125° F (52° C) or greater. Cut length to extend 2" beyond each end of plastic pipe marker.

2. Small Pipes: For external diameters less than 6" (including insulation if any), provide full band pipe markers, extending 360° around pipe and minimum 12" long at each location, fastened by one of the following methods:

   a. Snap-on application of pre-tensioned semi-rigid plastic pipe marker.

   b. Adhesive lap joint in pipe marker overlap. Laminate or bonded application of pipe marker to pipe (or insulation).

   c. Strapped to pipe with nylon strap.

3. Lettering: Manufacturer's standard pre-printed nomenclature which best describes piping system in each instance, as selected by Architect/Engineer in cases of variance with names as shown or specified.

   a. Arrows: Print each pipe marker with arrows indicating direction of flow, either integrally with piping system service lettering (to accommodate both directions), or as separate unit of plastic.

2.03 PLASTIC TAPE

A. Manufacturer's standard color-coded pressure-sensitive (self-adhesive) vinyl tape, not less than 3 mils thick.

   1. Width: Provide 1-1/2" wide tape markers on pipes with outside diameters (including insulation, if any) of less than 6".

2.04 PLASTIC VALVE TAGS

A. Provide manufacturer's standard plastic valve tags with printed enamel lettering, with piping system abbreviation in approximately 3/16" high letters and sequenced valve numbers approximately 3/8" high, and with 5/32" hole for fastener.

2.05 VALVE TAG FASTENERS

A. Manufacturer's standard solid brass (wire link or beaded type), or solid brass S-hooks of sizes required for proper attachment of tags to valves, and manufactured specifically for that purpose.

2.06 VALVE SCHEDULE FRAMES

A. For each page of Valve Schedule, provide glazed display frame, with screws for removable mounting on masonry walls. Provide frames of finished hardwood or extruded aluminum, with SSB-grade sheet glass.

2.07 ENGRAVED PLASTIC-LAMINATE SIGNS

A. Provide engraved stock phenolic plastic laminate, complying with FS L-P-387, engraved with engraver's standard letter style of sizes and wording, black with white core (letter color) except as otherwise indicated, punched for mechanical fastening except where adhesive mounting is necessary because of substrate.

1. Thickness: 1/16" for units up to 20 sq in or 8" length; 1/8" for larger units.

2. Fasteners: Self-tapping stainless-steel screws, except contact-type permanent adhesive where screws cannot or should not penetrate substrate.

3. Letter Size: No less than ½" tall. (Use unit# as noted on the equipment schedules)

B. Provide for all items on equipment schedules.

C. Provide for all emergency shut-offs.

D. Provide for all pressure vessels, storage tanks, air separators, etc.

2.08 PAINT

A. Behr Urethane Alkyd Satin Enamel.

B. Use appropriate primer.

PART 3 - EXECUTION

3.01 COORDINATION

A. Where identification is to be applied to surfaces which require insulation, painting or other covering or finish including valve tags in finished mechanical spaces, install identification prior to installation of acoustical ceilings and similar removable concealment.

3.02 PIPING IDENTIFICATION

A. Install pipe markers on each system, and include arrows to show normal direction of flow.

3.03 PIPE MARKERS AND COLOR BANDS

A. Locate pipe markers and color bands as follows wherever piping is exposed to view in occupied space, machine rooms, accessible maintenance spaces and exterior non-concealed locations or in accessible ceiling spaces.

1. Near each valve and control device.

2. Near each branch, excluding short take-offs for fixtures and terminal units; mark each pipe at branch where there could be question of flow pattern.

3. Near locations where pipes pass through walls or floor/ceilings, or enter non-accessible enclosures.

4. At access doors, manholes, and similar access points which permit view of concealed piping.

5. Near major equipment items and other points of origination and termination.

6. Spaced intermediately at maximum spacing of 50' along each piping run, except reduce spacing to 25' in congested areas of piping and equipment.

7. On piping above removable acoustical ceilings omit intermediately spaced markers.

8. Color assignments and stencil for piping identification shall be as listed below (colors used shall be verified with Owner prior to ordering).

Service	Color	Stencil
Heating Water Supply	Green	White
Heating Water Return	Green	White
Chilled Water Supply	Green	White
Chilled Water Return	Green	White
Refrigerant Liquid	Yellow	White
Gas Piping	Yellow	Black
Sprinkler Work	Red	White
Condensate Piping	Green	White

9. Identification stenciling and flow arrows shall be following colors for proper contrast:

Arrows & ID Stenciling	Color Shade of Pipe
White	Red, Gray, Black and Green
Black	Yellows, Oranges and White

3.04 VALVE IDENTIFICATION

A. Provide valve tag on every valve, cock, and control devices in each piping system; exclude check valves, valves within factory-fabricated equipment units, convenience and lawn watering hose bibbs, and shut-off valves at plumbing fixtures, HVAC terminal devices and similar rough-in connections of end-use fixtures and units. List each tagged valve in Valve Schedule for each piping system.

3.05 SCHEDULES

A. Mount Valve Schedule frames and schedules in riser rooms or as directed by Engineer.

3.06 MECHANICAL EQUIPMENT IDENTIFICATION

A. Install engraved plastic laminate sign on or near each major item of mechanical equipment and each operation device. Provide signs for the following general categories of equipment and operational devices. Provide signs on suspended ceiling tile below mechanical equipment located above ceiling.

1. Pumps and similar motor-driven units.

2. Fans, exhaust, and air handling units.

3. Tanks and pressure vessels.

3.07 FIRE AND FIRE/SMOKE DAMPER IDENTIFICATION

A. Furnish and install label reading "FIRE DAMPER" or "FIRE/SMOKE DAMPER" on each fire damper duct access door. Provide additional labels at locations where external duct insulation covers the access door. Install on outside of insulation.

3.08 CONCEALED ITEMS

A. Items concealed above accessible ceilings requiring access, shall have the ceiling marked to indicate such item's location. The marking system shall consist of colored phenolic plates with ½" tall engraved lettering specifying the item concealed; plate shall be applied to ceiling T-bar framing with rivets or other owner approved method below the concealed item. Colors used shall be verified with Owner, and unless directed otherwise, shall be:

Item	Color
Heating System Equipment Component	Green
Fire Protection System Component	Red

B. Provide three (3) color legends (hard laminate) listing the above colors. Locate as directed by Owner.

END OF SECTION

SECTION 23 0593

AIR SYSTEM TESTING AND BALANCING

PART 1 - GENERAL

1.01 GENERAL

A. Includes, but not limited to, testing, balancing and adjusting of air heating, cooling and exhaust systems.

1.02 RELATED SECTION(S)

A. General Conditions and Division 1 apply to this section.

B. Division 23 shall make changes in pulley, belts, and dampers as required for correct balance as recommended by Air Testing & Balancing Agency at no additional cost to Owner.

C. Division 23 shall repair leaks in ductwork at no additional cost to Owner.

1.03 SYSTEM DESCRIPTION (PERFORMANCE REQUIREMENTS)

A. Perform testing and balancing in complete accordance with the Associated Air Balancing Council (AABC), National Environmental Balancing Bureau (NEBB), or National Balancing Council (NBC) standards and procedures.

B. Air Testing & Balance Agency shall perform tests specified, compile test data, and submit copies of complete test data to Contractor for forwarding to Architect/Engineer for evaluation and approval.

1.04 SUBMITTALS REQUIRED BY THIS SECTION

A. Company information including Washington State Contractors' license

B. Key personnel and resumes

C. AABC, NEBB, or NBC certifications

D. Provide reference of five (5) completed jobs of similar size and complexity.

1.05 OPERATION AND MAINTENANCE REQUIREMENTS OF THIS SECTION

A. Final air balance report shall be bound in the O & M Manual or provided under a separate volume.

B. Preliminary air balance report shall be submitted to the Architect/Engineer for approval. Preliminary report shall note all finished measured data.

C. Final Test Data:

1. Provide project name, name and telephone number of balancing firm, GC, MC, Architect, and Engineer in the cover (or first page) of report.

2. Provide a summary of air balance findings regarding airtightness of each ducted systems, deficiencies of equipment to meet design requirements, deficiencies of space pressure relationships, etc.

3. Cover sheet shall have a statement from the site project manager that reads, “The air system testing and balancing report contained here in is true and factual based on actual field measurements and adjustments. I have personally performed or witnessed a minimum of 5% of the airflow tests.”

4. Each page of test report to have a unique page number.

5. Provide fan curve or chart of each fan in system.

6. Provide final approved test report in PDF format on CD. Provide one more CD than hard copies of test report.

7. Obtain and provide a copy of the air barrier test (building tightness) whether or not the Air Balance Contractor produced the test.

1.06 QUALITY ASSURANCE (QUALIFICATIONS)

A. Mechanical Contractor shall procure services of an independent Air Testing & Balance Agency, which specializes in testing, and balancing of heating, ventilating, and cooling systems to balance, adjust, test air-moving equipment, air distribution, and exhaust systems.

B. Agency shall be approved in writing by Consultant.

C. Instruments used by Agency shall be accurately calibrated and maintained good working order.

D. If requested, conduct tests in presence of Architect/Owner/Engineer.

1.07 SEQUENCING & SCHEDULING

A. Mechanical Contractor shall award test and balance contract to approved agency upon receipt of his contract to proceed to allow Agency to schedule this work in cooperation with other Sections involved and comply with c/ompletion date.

B. Begin air testing and balancing upon completion of air cooling, heating, and exhaust systems including installation of all specialties and devices.

C. Mechanical Contractor shall put heating, ventilating, and cooling systems and equipment into full operation and continue their operation during each working day of testing and balancing.

PART 2 - PRODUCT

Not applicable

PART 3 - EXECUTION

3.01 FIELD QUALITY CONTROL

A. Testing Procedure: Air Testing & Balancing Agency shall perform following tests and balance system in accordance with following requirements at design conditions of supply and a minimum outside air CFM (not 100% return or 100% economizer).

1. Test, adjust, and record fan rpm to design requirements.

2. Test and record motor amperes at design conditions.

3. Make pitot tube traverse of main supply duct and obtain design cfm at fans. (systems of 1000 CFM or greater)

4. Test and record system static pressures: suction, discharge, and clean filters (if applicable; for systems of 2000 CFM or greater)

5. Test, adjust, and record system for design cfm air.

6. Test, adjust, and record system for design cfm outside air.

7. Test, adjust, and record each diffuser, grille, and register to within 10% of design requirements.

8. On a floor plan, identify each diffuser, grille, and register to location and area using a designation symbol unique to that page.

9. Identify and list size, type, and manufacturer of diffusers, grilles, registers, and testing equipment. Use manufacturer's rating on equipment to make required calculations.

10. In readings and tests of diffusers, grilles, and registers, include required cfm and test cfm after adjustments.

11. In cooperation with Division 23, set adjustments of automatically operated dampers to operate as specified, indicated, or noted.

12. Adjust diffusers, grilles, and registers to minimize drafts.

13. Identify at each volume damper with permanent mark, the position of actuator handle once final balance has been achieved.

14. Measure and record all pressure differential relationships as identified by the control's diagrams (i.e. labs, kitchen, pharmacy, art rooms, building pressure, etc). These measurements are to be taken when all HVAC is running after full balance has been completed. Note the measured reference points to determine the pressure differential.

15. For any spaces with exhaust and supply to them where design airflows cannot be obtained, the systems shall be adjusted to produce a negative pressure to the adjacent space (i.e. workrooms, restrooms, labs, nurse rooms, etc.)

16. When reconciling supply, return, outside, and exhaust air quantities, priority shall be placed on outside air quantities (typically, return air quantities noted on plans are for duct sizing only).

17. Where duct pressure sensors are noted in controls diagrams (i.e. variable volume systems) adjust system to its minimum pressure point that still achieves full airflow to all terminals. Record this setpoint in test report and provide data to controls contractor.

18. For variable volume systems, adjust sheave package to produce maximum airflow (or diversity as applicable) at 60 Hz with simulated filter loading. If maximum airflow cannot be obtained at 60 Hz, increase frequency until maximum airflow is obtained as allowed by the equipment manufacturer and maximum motor amperes. Record final values.

19. Verify that all gravity backdraft dampers are moving freely, open in proper direction, and are unbound.

20. After balancing system, measure terminal CFM when system is in 100% economizer. If supply is greater than design, coordinate with controls contractor or MC to provide damper stops to provide design CFM during 100% economizer.

21. On All Motors with Variable Drives: Set maximum amperage safety to protect motor from over loading.

B. Final Inspection & Adjustments:

1. Balancing agency shall be represented at final inspection meeting by qualified testing personnel with balancing equipment and two copies of air balancing test report.

    a. Architect may choose and direct spot balancing of one zone. Differences between the spot balance and test report will be justification for requiring repeat of testing and balancing for entire building.

    b. Rebalancing shall be done in presence of Architect and subject to his approval.

c. Spot balance and rebalance shall be performed at no additional cost to Owner.

2. System shall be completely balanced and all reports submitted to Architect prior to prefinal inspection.

3. Where equipment supplied to job site provides over 5% more air than schedule requirements, rooms supplied by that equipment shall have their supply air quantities increased by the ratio of actual total air quantity supplied to minimum air quantity required by schedule.

3.02 BALANCING FIRMS (APPROVED)

A. Hardin and Sons

B. MTW Design

C. Airtest Company, Inc.

D. American Air Balance Company

E. Advanced Mechanical Services, Inc.

F. Testing & Commissioning Services

G. Precision Test and Balance, Inc.

END OF SECTION

SECTION 23 0595

WATER SYSTEM BALANCING

PART 1 - GENERAL

1.01 SUMMARY

A. Includes But Not Limited To: Balancing and adjusting of water heating and cooling systems.

B. Related Sections: General Conditions and Division 1 apply to this Section.

1.02 SYSTEM DESCRIPTION

A. Performance Requirements: Testing & Balance Agency shall perform tests specified, compile test data, and submit four copies of complete test data to Contractor for forwarding to Architect for evaluation and approval.

1.03 SUBMITTALS REQUIRED OF THIS SECTION

A. Company information including Washington State Contractors' license

B. Key personnel and resumes

C. AABC, NEBB, or NBC certifications

D. Provide reference of five (5) completed jobs of similar size and complexity.

1.04 QUALITY ASSURANCE

A. Qualifications:

1. Contractor shall procure services of an independent Testing & Balancing Agency which specializes in balancing and testing of heating, ventilating and cooling system to balance, adjust and test water systems and equipment.

2. Agency shall provide proof of having successfully completed at least five projects of similar size and scope. Work by this Agency shall be done under direct supervision of a qualified Heating and Ventilating Engineer employed by Agency.

3. Agency shall be approved in writing by Consultant.

4. Instruments used by Agency shall be accurately calibrated and maintained in good working order.

5. Balance & Testing Agency shall provide the technicians with following instruments for field use:

   a. One set of pressure gauges and fittings.

   b. Dry bulb thermometer

   c. Wet bulb thermometer

   d. Thermocouple unit and thermocouples

   e. Set of balancing cock adjustment wrenches

   f. Portable field flowmeter

6. If requested, conduct tests in presence of Architect.

7. Provide or coordinate all required plugs, test ports, valves, and equipment required to provide a complete and accurate balancing report for the hydronic system.

1.05 BALANCING FIRMS (APPROVED)

A. Hardin and Sons

B. Testing and Commissioning Services

C. Airtest Company, Inc.

D. American Air Balance Company

E. Advanced Mechanical Services, Inc.

F. Precision Test and Balance, Inc.

G. MTW Design

1.06 SEQUENCING & SCHEDULING

A. Contractor shall award test and balance contract to approved agency upon receipt of his contract to proceed to allow Agency to schedule this work in cooperation with other Sections involved and comply with completion date.

B. Begin testing and balancing upon completion of cooling and heating systems including installation of all specialties and devices.

C. Contractor shall put heating, ventilating and cooling systems and equipment into full operation and continue their operation during each working day of testing and balancing.

1.07 OPERATION AND MAINTENANCE REQUIREMENTS OF THIS SECTION

A. Final water balance report shall be bound in the O & M Manual or provided under a separate volume.

B. Preliminary water balance report shall be submitted to the Architect/Engineer for approval. Preliminary report shall note all finished measured data.

C. Final Test Data:

1. Provide project name, name and telephone number of balancing firm, GC, MC, Architect, and Engineer in the cover (or first page) of report.

2. Provide a summary of water balance findings regarding deficiencies of equipment to meet design requirements, deficiencies of main system, etc.

3. Cover sheet shall have a statement from the site project manager that reads, “The water system testing and balancing report contained herein is true and factual based on actual field measurements and adjustments. I have personally performed or witnessed a minimum of 5% of the airflow tests.”

4. Each page of test report to have a unique page number.

5. Provide pump curve or chart of each pump in system.

6. Provide final approved test report in PDF format on CD. Provide one more CD than hard copies of test report.

PART 2 - PRODUCTS

Not Applicable

PART 3 - EXECUTION

3.01 FIELD QUALITY CONTROL

A. Preparation of System - Phase 1:

1. Open valves to full position including coil stop valves, close bypass valves and return line balancing cocks.

2. Remove and clean strainers.

3. Examine water in system to determine if it has been treated and is clean.

4. Check pump rotation.

5. Check expansion tanks to make sure they are not air bound and system is full of water.

6. Document air pressure at normal system operating gpm in diaphragm type expansion tank.

7. Check air vents at high points of water systems to make sure they are installed properly and are operating freely. Make certain air is removed from circulating system.

8. Set temperature controls so coils are calling for full cooling. This should close automatic bypass valves at coil and chillers.

9. Check operation of automatic bypass valve.

10. Check and set operating temperature of boilers heat exchangers, and cooling tower to design requirements.

11. Perform air balance before beginning water balance.

B. Performance of Testing & Balancing - Phase II:

1. Set condenser water, and hot water pumps to proper gpm delivery.

2. Adjust flow of water through cooling tower.

3. Adjust flow of hot water through boilers, heat exchangers and condensers.

4. Check leaving water temperatures, return water temperatures and pressure drop through cooling tower and boilers. Reset to correct design temperatures. Include heat exchangers and condensers.

5. Check water temperature at inlet side of coils. Note rise or drop of temperatures from source.

6. Balance each water coil.

7. Upon completion of flow readings and coil adjustments, mark settings and record data.

C. Performance of Testing & Balancing - Phase III:

1. After making adjustments to coils, recheck settings at pumps, cooling tower, and boilers. Readjust if required.

2. Install pressure gauges on each coil, then read pressure drop through coil at set flow rate on call for full cooling and full heating. Set pressure drop bypass valve to match coil full flow pressure drop. This prevents unbalanced flow conditions when coils are on full bypass.

3. Check and record the following items at each cooling and heating element:

a. Inlet water and air temperatures

b. Leaving water and air temperatures

c. Pressure drop of each coil

d. Pressure drop across bypass valve

e. Pump operating suction and discharge pressures and final TDH

f. Mechanical specifications of pumps

g. Rated and actual running amperage of pump motor

D. Domestic Hot Water Circulation Balance: Balance domestic hot water circulation using circuit balancing valves per Section 22 0523. Divide pump GPM by number of balancing cocks. Water flow not to exceed 5 FPS (notify Engineer if flow exceeds maximum value).

E. On All Motors with Variable Drives: Set maximum amperage safety to protect motor from over loading.

END OF SECTION

SECTION 23 0713

EQUIPMENT/DUCTWORK INSULATION

PART 1 - GENERAL

1.01 GENERAL

A. This section describes the insulation requirement to meet or exceed the 2018 Washington State Energy Code. Lining installation is per 23 3113.

1.02 RELATED SECTION(S)

A. General Conditions, Division 1

B. Section 20 0000 - General Mechanical Conditions

C. Section 23 3113 - Steel Ductwork

1.03 SUBMITTAL REQUIREMENTS OF THIS SECTION

A. Wrap Insulation

1.04 OPERATION AND MAINTENANCE REQUIREMENTS OF THIS SECTION

A. Not Applicable

PART 2 - PRODUCTS

2.01 APPROVED MANUFACTURERS

A. Not Applicable

2.02 DUCTWORK INSULATION

A. Manufacturers: Manville Corporation Owens Corning, Knauf Insulation, Manson Insulation, or approved equal.

B. Flexible Fiber Glass Blanket (Wrap Insulation): Manville, Microlite Type 75 meeting ASTM C553, Type 1, Class B-2; flexible blanket.

1. 'K' ('ksi') Value: 0.27 at 75°F (0.040 at 24°C) installed.

2. Density and R-value:

a. R-3.3: 1.0” inch of 1.5 to 3.0 lb/cu. Ft. glass fiber blanket.

b. R-5.3: 2.0” inches of 0.75 lb/cu. Ft. or 1.5 inches of 1.5 to 3.0 lb/cu. Ft. glass fiber blanket.

c. R-7: 3.0 inches of 0.75 lb/cu. Ft. or 2.0 inches of 1.5 to 3.0 lb/cu. Ft. glass fiber blanket.

3. Vapor Barrier Jacket: FSK, aluminum foil reinforced with fiber glass yarn and laminated to fire-resistant kraft, secured with UL listed pressure sensitive tape and/or outward cinched expanded staples and vapor barrier mastic as needed.

C. Rigid Fiber Glass Board: Insulation Board meeting ASTM C 612 Type IA and IB; rigid.

1. 'K' ('ksi') Value: ASTM C 177, 0.22 at 75°F mean temperature.

2. Maximum Service Temperature: 450°F.

3. Vapor Retarder Jacket: ASJ conforming to ASTM C 1136 Type I, or FSK or PSK conforming to ASTM C 1136 Type II.

4. Securement: Secured in place using adhesive and mechanical fasteners spaced a minimum of 12" on center with a minimum of 2 rows per side of duct. Insulation shall be secured with speed washers and all joints, breaks and punctures sealed with appropriate pressure-sensitive foil tape, or glass fabric and vapor retarder mastic.

5. Density and R-value:

a. R-4.5: 1.0" of 6.0 lb./cu.ft.

b. R-6.8: 1.5" of 6.0 lb./cu.ft.

c. R-9.1: 2.0" of 6.0 lb./cu.ft.

D. Duct Insulation Protection:

1. Aluminum Jacket: 0.016-inch (.045 mm) thick sheet, smooth/embossed finish, with longitudinal slip joints and 2-inch (50 mm) lamps.

2. Manville Insulkote ET, a non-water-vapor retarder, non-burning, weatherproof coating for use over insulation where "breathing" is required.

3. Manville Zeston 2000 jacketing, UV resistant polyvinyl chloride covering with joints secured and sealed with Manville Perma-Weld Adhesive.

4. Canvas Jacket: UL listed fabric, 6 oz/sq. yd. (220 g/sq. m.), plain weave cotton treated with dilute fire-retardant lagging adhesive.

5. Self-Adhering Jacketing: Material to be VentureClad [1579CW] with a white finish. Jacketing material is to have a maximum flame spread/smoke developed index of 25/20 per UL 723, 1 0.0000 water vapor permeance rating per ASTM E-96, mold inhibitors incorporated, and be UV stable.

2.03 DUCTWORK LINING

A. See Section 23 3113 - Steel Ductwork.

PART 3 - EXECUTION

3.01 EXAMINATION AND PREPARATION

A. Verify that ductwork has been tested for leakage in accordance with SMACNA standards before applying insulation materials.

B. Verify that all surfaces are clean, dry, and free of foreign material.

C. External Ductwork Insulation:

1. Provide insulated ductwork conveying air below ambient temperature with vapor retardant jacket. Seal all vapor retardant jacket seams and penetrations with UL listed tapes or vapor retardant adhesive.

2. Provide insulated ductwork conveying air above ambient temperature with or without vapor retardant jacket. Where service access is required, bevel and seal ends of insulation.

3. Continue insulation through walls, sleeves, hangers, and other duct penetrations except where prohibited by code.

4. The underside of ductwork 24 inches or greater shall be secured with mechanical fasteners and speed clips spaced approximately 18 inches on center. The protruding ends of the fasteners should be cut off flush after the speed clips are installed, and then, when required, sealed with the same tape as specified above.

5. For ductwork exposed to physical abuse in unfinished and exposed spaces, finish with duct insulation protection.

6. For outdoor applications, provide insulation with a weather protection jacket. Manville Zeston 2000, VentureClad self-adhering or approved equal. Install per manufacturer's instructions.

D. For installation of lining insulation, see Section 23 3113.

3.02 INSULATION SCHEDULE

A. Provide wrap insulation and duct liner for the duct systems indicated per the following table (R-value indicates the thickness to be provided as defined in Section 23 0713 for wrap insulation and Section 23 3113 for liner):

DUCT TYPE AND LOCATION	LINER	WRAP
Within the Building Envelope:		
- Supply Air	R - 3.3	Not Allowed
- Return Air	R - 3.3	Not Allowed
- Primary Supply Air	Not Allowed	R – 3.3[1]
- Primary Return Air	Not Allowed	R – 3.3[1]
- Relief Air	Not Allowed	R – 3.3[1,2]
- Transfer Air	R-3.3	Not Allowed
- Exhaust Air	R-3.3	Not Allowed [2]
- HRU/ERU Exhaust Air	Not Allowed	R – 7[1,2]
- HRU/ERU Return Air	R-3.3	Not Allowed
- Outside Air	Not Allowed	R - 7[1,2]
In cold attic, in cold ceiling space, in cold wall, in cold garage, in cold crawl space:		
- Supply Air	R – 6[3]	R – 6[3]
- Return Air	R – 6[3]	R – 6[3]
- Relief Air	Not Allowed	Not Allowed
- Transfer Air	Not Allowed	Not Allowed
- Exhaust Air	Not Allowed	Not Allowed
- Outside Air	Not Allowed	Not Allowed
On exterior of building, on roof:		
- Supply Air	R – 8[3]	R – 8[3]
- Return Air	R – 8[3]	R – 8[3]
- Relief Air	Not Allowed	Not Allowed
- Transfer Air	Not Allowed	Not Allowed
- Exhaust Air	Not Allowed	Not Allowed
- Outside Air	Not Allowed	Not Allowed
In concrete, in ground:		
- Supply Air	R - 5.3	Not Allowed
- Return Air	R - 5.3	Not Allowed
- Relief Air	Not Allowed	Not Allowed
- Transfer Air	Not Allowed	Not Allowed
- Exhaust Air	Not Allowed	Not Allowed
- Outside Air	Not Allowed	Not Allowed

Table Footnotes:

1. Where duct is exposed to view, provide wrap with paintable duct insulation protection.
2. Building level insulation is required from backdraft/motorized damper to louver or roof hood. See plans for additional details. Coordinate with GC for insulation.
3. Use liner or rigid fiberglass board.

B. For purposes of the Insulation Schedule above, the following defines the duct systems:

1. Supply Air: Air that has passed through mechanical conditioning device, such as a furnace, coil, evaporative section, heat recovery device, etc. that is distributed to the conditioned space.

2. Return Air: Air from the conditioned space to an air handler.

3. Primary Supply and/or Return Air: Any duct between an air handler and a terminal unit (capable of throttling the air with a motorized damper, capable of heating the air, and/or capable of cooling the air). Example of terminal unit is a variable air volume terminal (fan or throttle damper) or an induction/chilled beam terminal.

4. Relief Air: Air from the conditioned space to the outdoors or to a large semi-conditioned or non-conditioned space.

5. Transfer Air: Air from one conditioned space to another conditioned space.

6. Exhaust air: Air from a space moved by a fan to directly outside. Also, air downstream of an energy recovery device to directly outside.

7. HRU/ERU Return Air: Return air from a grille to a heat recovery device. or motorized damper.

8. HRU/ERU Exhaust Air: Exhaust air from heat recovery device to directly outside.

9. Outside Air: Air from the outside to a mechanical conditioning device such as a furnace, coil, evaporative section, heat recovery device, etc.

END OF SECTION

SECTION 23 0719

HVAC PIPING INSULATIONS

PART 1 - GENERAL

1.01 GENERAL

A. Includes, but not limited to, insulating of piping and fittings per schedule in Part 3 of this specification.

B. Insulation at Hangers: Insulation shall be continuous through hangers on all insulated systems. Inserts at hangers are specified in Section 23 0529 and are considered as part of the hanger and support system. Inserts are required to be installed at the time of pipe installation and are intended to be installed by the Contractor installing the pipe hangers/supports. See Section 23 0529.

C. The intent of this section is to meet or exceed the requirements of the most current version of the Washington State Energy Code (WSEC). The stricter of this section and WSEC shall be met.

1.02 RELATED SECTIONS

A. General Conditions, Division 01

B. Section 20 0000 – General Mechanical Requirements

C. Section 23 0529 – Hangers and Supports for HVAC Piping & Equipment

D. Section 23 2000 – Hydronic System

E. Section 23 2300 – Refrigerant Piping System

1.03 SECTION INCLUDES

A. Piping insulation, jackets, and accessories

B. Engine exhaust insulation

1.04 SUBMITTAL REQUIREMENTS OF THIS SECTION

A. All insulation

B. Field Applied Jackets

1.05 OPERATION AND MAINTENANCE REQUIREMENTS OF THIS SECTION

A. Not Applicable

PART 2 - PRODUCTS

2.01 APPROVED MANUFACTUERS

A. Not Applicable

2.02 PIPE INSULATIONS

A. Glass Fiber: Meeting ASTM C547; rigid molded, noncombustible.

1. 'K' ('ksi') Value: 0.23 at 75 degrees F (0.033 at 24 degrees C).

2. Maximum Service Temperature: 850 degrees F (454 degrees C).

3. Vapor Retarder Jacket: AP-T PLUS White kraft paper reinforced with glass fiber yarn and bonded to aluminum foil, secure with self sealing longitudinal laps and butt strips or AP Jacket with outward clinch expanding staples or vapor barrier mastic as needed.

4. Approved Manufacturer:

a. Manville

b. Armstrong

c. Knauf

d. Manson Insulation

B. Elastomeric Insulation (Type 1): Meeting ASTM C534; flexible, closed cell, cellular elastomeric, molded or sheet.

1. Thermal Conductivity: 0.25 Btu-in/hr. Ft^2 °F.

2. Maximum Service Temperature of -70 degrees F. (-40 degrees C) to 220 degrees F (104 degrees C)

3. Maximum Flame Spread: 25.

4. Maximum Smoke Developed: 25/50 through 1" wall.

5. Maximum water vapor permeability, wet cup, perm-in .10.

6. Connection: Waterproof vapor retarder adhesive as needed.

7. UV-Protection: Outdoor protective coating.

8. Shall have R-Value of 4.2 at 1” and R=8 at 2”.

9. The material shall be manufactured under an independent third-party supervision testing program covering the properties of fire performance, thermal conductivity and WVT.

10. Shall be fiber free, formaldehyde-free, and low VOC's.

11. Approved Manufacturers:

    a. Armacell

    b. Kflex

    c. Aeroflex

C. Elastomeric Insulation (Type 2): Meeting ASTM C411; flexible, closed cell, and light weight EPDM rubber based elastomeric, molded or sheet.

1. Thermal Conductivity: 0.245 Btu-in/hr. Ft^2 °F at 75°F.

2. Maximum Service Temperature of -297 degrees F. (-57 degrees C) to 257 degrees F (125 degrees C)

3. Shall be able to withstand up to 300°F.

4. Maximum Flame Spread: 25.

5. Maximum Smoke Developed: 25/50 through 1" wall.

6. Water vapor permeability, per ASTM E96: 0.03 perm.

7. Connection: Waterproof vapor retarder adhesive as needed.

8. UV-Protection: Outdoor protective coating.

9. Shall have R-Value of 4.0 at 1".

10. Shall be fiber free, formaldehyde-free, and low VOC's.

11. Approved Manufacturers:

    a. K-Flex HT

    b. Aeroflex Aerocel

D. Mineral Fiber: Premolded insulation meeting ASTM C547 for piping systems to +1200°F., asbestos free, non-combustible, 100% recovery after 10% compression.

E. Hydrous Calcium Silicate: Meeting ASTM C533; rigid molded pipe; asbestos-free coded throughout material thickness and maintained throughout temperature range.

1. 'K' ('ksi') Value: 0.40 at 300 degrees F (0.058 at 149 degrees C).

2. Maximum Service Temperature: 1200 degrees F (649 degrees C).

3. Comprehensive Strength (block): Minimum of 160 psi to produce 5% compression at 1-1/2-inch thickness.

4. Tie Wire: 16-gauge (0.045 mm) stainless steel with twisted ends on maximum 12-inch (300 mm) centers.

F. Flexible Unicellular Polyolefin: In tubular form complies with the property requirements of the following specifications: ASTM C534, MIL-P-15280, MIL-HHI-573, ASTM E84 (25/50), UL-723 (25/50), NFPA 255 (25/50), Uniform Building Code (UBC) 42-1, Class I, UL-94HBF, FMVSS-302, CAN-ULC-S102.2-M88 (25/50) Flammability Classification, MEA #267-92-M, New York.

1.	'K' Factor: ASTM C177	.24 @ 75°F (24°C)
		.26 @ 90°F (32°C)
2.	Moisture Vapor Transmission:	ASTM E96
		(0.0) Zero perm-inch
3.	Minimum Service Temperature:	-165°F
4.	Maximum Service Temperature:	+210°F (99°C)
5.	Maximum Flame Spread:	ASTM E84
		25 or less
6.	Maximum Smoke Developed:	ASTM E84
		50 or less

7. Contains NO constituents associated with stress corrosion failure of copper tubing.

8. Connection Method — Piping System

9. Temperature Range:

a.	Fuse-Seal Hot Melt Method	-110°F (-79°C)
	(contact manufacturer for	+210°F (99°C)
	more details)	
b.	Contact Adhesive	-110°F (-79°C)
	(Mfg. Approval)	+210°F (99°C)
c.	Lap seal end joint tape	32°F (0°C)
	recommended by insulation	+210°F (99°C)
	manufacturer.	

G. Cellular Glass: ASTM C552; 'k' value of 0.35 at 75 degrees F ('ksi' value of 0.047 at 24 degrees C); 8.0 lb/cu ft. (128 Kg/cu m) density.

1. Glass cell insulation, Pittsburgh Corning "Foamglas", with water-vapor permeability of 0.00 perm-inch as tested per ASTM and "pittwrap" heat sealed water-proof membrane.

H. Belowground Steam System Insulation: "Ricwil" piping system or pre-insulated pipe system; consisting of type K copper carrier pipe to 400°F, above 400°F use steel pipe, closed cell polyurethane insulation (with heat loss no greater than 43.72 Btu/Hr-ft for 4" pipe at 150°F temperature difference); heavy PVC outer jacket, and O-ring sealed insulated couplings.

I. Pre-insulated Pipe:

1. Carrier pipe to be schedule 40 steel for heating water and HDPE for chilled water.

2. Jacket material to be HPDE.

3. Insulation to be polyurethane foam. Insulation shall completely fill the annular space between the carrier pipe and jacket. Insulating rated temperature to be -40°F to 250°F. Minimum thermal conductivity to be 0.16 Btu-hr/sq. ft./°F/inch at 73°F.

4. Install pipes and accessories per manufacturer's recommendations.

5. Approved Manufacturers:

a. Perma-Pipe

b. Thermacor

c. Rovanco

J. Field Applied Jackets:

1. PVC Plastic: One-piece molded type fitting covers and jacketing material, gloss white.

a. Connections: Tacks; Pressure sensitive color matching vinyl tape.

2. Canvas Jacket: UL listed fabric, 6 oz/sq yd (220 g/sq m), plain weave cotton treated with dilute fire-retardant lagging adhesive.

3. Aluminum Jacket: 0.016-inch (0.045 mm) thick sheet, (smooth/embossed) finish, with longitudinal slip joints and 2-inch (50 mm) laps, die shaped fitting covers with factory attached protective liner.

4. Approved Manufacturer: Manville Zeston 2000.

K. Approved Manufacturers (Cellular Glass Excluded):

1. Manville

2. Armstrong

3. Knauf

4. Owens Corning

5. IMCOA (for Flexible Unicellular Polyolefin only)

2.03 PIPE SHIELDS (SADDLES)

A. Saddles shall be minimum, 20 gauge dimpled galvanized sheet steel covering 40% of the circumference of the insulation. Length shall be a minimum of 6". See Section 22 0529 Hangers and Supports for longer shields.

PART 3 - EXECUTION

3.01 EXAMINATION AND PREPARATION

A. Verify that piping has been tested for leakage in accordance with IMC standards before applying insulation materials.

B. Verify that all surfaces are clean, dry, and free of foreign material.

3.02 INSTALLATION

A. Install materials in accordance with manufacturer's recommendations, building codes, and industry standards.

B. Continue insulating vapor barrier through penetrations except where prohibited by code.

C. Piping Insulation:

1. Locate insulation and cover seams in least visible locations.

2. Neatly finish insulation at supports, protrusions, and interruptions.

3. Provide insulated dual temperature pipes or cold pipes conveying fluids below ambient temperature with vapor retardant jacket with self sealing laps. Insulate complete system.

4. For insulated pipes conveying fluids above ambient temperature, secure jackets with self sealing lap or outward clinched, expanded staples. Bevel and seal ends of insulation at equipment, flanges, and unions.

5. Insulated pipe supports and insulation shield shall be in place at each hanger and support as required by Section 23 0529 prior to insulating.

6. For pipe exposed in mechanical equipment rooms or exposed in finished spaces up to 10 feet above finished floor, finish with Manville Zeston 2000 PVC jacket and fitting covers or aluminum jacket.

7. For exterior applications, provide weather protection jacket or coating. Insulated pipe, fittings, joints, and valves shall be covered with Manville Zeston 2000 PVC or aluminum jacket. Jacket seams shall be located on bottom side of horizontal piping.

8. Installation of below ground chilled water and heating water, and water piping insulation: All piping shall be insulated with "Foamglass" type with heat sealed "pittwrap" or pre-insulated pipe system.

9. Refrigeration Piping:

a. Install insulation in snug contact with pipe and in accordance with manufacturer's recommendations.

b. Stagger joints on layered insulation.

c. Slip insulation on tubing before tubing sections and fittings are assembled keeping slitting of insulation to a minimum.

d. Seal joints in insulation.

e. Insulate flexible pipe connectors.

f. Insulation exposed outside building shall have "slit" joint seams placed on bottom of pipe and given two coats of gray adhesive finish.

g. Insulate fittings with sheet insulation and as recommended by manufacturer.

10. Hydronic system (water loop heat pump) piping that operates between 60°F and 90°F will be uninsulated.

11. Flexible Polyolefin Cellular Pipe Installation:

a. Slip insulation on the pipe before making connections wherever possible or install pre-slit, pre-glued over pipe sealing longitudinal joint as per manufacturer's recommendations. Fabricate fittings from polyolefin insulation. Seal all butt joints and fittings using factory recommended fuse seal joining system as per manufacturer's instructions.

b. At pipe hanger locations, see specification Section 22 0529 for insulated pipe supports.

c. For direct burial applications, material to be sized per manufacturer's recommendations to allow for compression. Fuse seal all butt joints and fittings using factory recommended fuse seal joining system as per manufacturer's instructions. Back fill with medium grade sand to a minimum of 6 inches in thickness.

D. Equipment Insulation Installation: Install sheets of polyolefin in largest manageable sizes. Apply full coverage of manufacturer's recommended adhesive to both the equipment and insulation, or use pre-glued flat sheets of insulation. Butt all joints firmly together and apply factory adhesive or fuse seal system into joint as per manufacturer's instructions.

3.03 PIPING INSULATION SCHEDULE

Insulation Type	Pipe Size Inch	Thickness Inch
Glass Fiber Insulation:		
Heat Recovery Water	All Sizes	1"
Piping Exposed to Freezing or Semi-Heated Spaces	All Sizes	1½”
Steam to 15 psig (Up to 250°F)	Up to 3"	2½”
	4" to 6"	3"
Steam Condensate (Up to 250°F)	Up to 3"	2½"
	4 to 8"	3"
Heating Water Supply and Return (Up to 200°F)	Up to 1¼”	1½"
	1½-4”	2”
Chilled Water Supply and Return (40° - 60°F)	Up to 1½”	1"
	Over 1½”	1”
Elastomeric Insulation (Type 1):		
Condenser Water Supply	Up to 2"	1"
and Return	2 ½"	1½"
	And Above	
Refrigerant Suction/Discharge and Hot Gas Bypass (Non-VRF)	All Sizes	1½"
Refrigerant Liquid (Non-VRF)	All Sizes	½”
Humidifier Piping	All Sizes	1½"
Elastomeric Insulation (Type 2):		
VRF Refrigerant High/Low Pressure Gas	All Sizes	
VRF Refrigerant Suction Gas Pipe	All Sizes	1”
VRF Refrigerant Liquid Pipe	All Sizes	1”
Mineral Fiber Insulation:		
Medium and High	Up to 4"	5”
Pressure Steam (Up to 350°F)	Over 4"	5"
Above Ground		
Medium and High	Up to 4"	5"
Pressure Steam (Greater than 350°F)	Over 4"	5"
Hydrous Calcium Silicate:		
Engine Exhaust Piping	All Sizes	2"
Flexible Unicellular Polyolefin:		
Refrigerant Suction (40° - 55°F/Non-VRF)	Up to 2"	1"
Refrigerant Hot Gas (Non-VRF)	Up to 2"	1½"
Cellular Glass or Pre-Insulated Pipe:		
Below Ground Chilled/Heating/Piping (Up to 200°F)	All Sizes	2"

3.04 FITTINGS, VALVES, STRAINERS, FLANGES, HEADERS, EXPANSION TANKS, HEAT EXCHANGERS, AIR CONTROL EQUIPMENT, PUMP SUCTION AND DISCHARGE INSULATION COVERS

A. General: Provide all fitting insulation covers for pipe fittings, grooved end couplings, and for pipe flanges.

B. Exposed Work: Provide "Zeston PVC" insulated fitting covers applied after pipe insulation is installed. A pre-cut "Hi-Lo Temp" insulation insert, conforming to the UL 25/50 rating, shall be snugly tucked around the fitting making sure the fitting is covered with the full thickness of insulation.

1. All others, provide covering in pad form, constructed as follows: Use 1-inch-thick Owens-Corning Fiberglas TIW Glass Wool, Type I, non-oiled, fully enclosed on all sides and edges within tight-weave canvas jacket. Attach Bergen hooks around edges of pad. Fit pad to device with edges tightly butted and secure with copper wire laced between hooks. Provide vapor seal where vapor seal is required for adjacent insulation.

C. The one-piece UL 25/50 rated PVC fitting cover shall be snapped over the insulated fitting and secured with tack fasteners, staples, or tape.

D. Concealed Piping: Build up insulation with asbestos-free insulation cement for hydrous calcium silicate pipe insulation; Owens-Corning T1W glass fiber wool-type wrap or "Hi-Lo Temp" insert, to full thickness of adjacent pipe insulation; cover with Zeston fitting covers stapled to adjacent insulation jacket, or use 3" wide canvas and lagging adhesive.

E. Gauge Lines: Insulate to the gauge shutoff valve.

3.05 PIPE HANGERS

A. Do not allow pipes to come in contact with hangers.

END OF SECTION

SECTION 23 0900

ENERGY MANAGEMENT AND CONTROLS (DDC)

PART 1 - **GENERAL**

1.01 GENERAL REQUIREMENTS

A. Conform to General Conditions and Supplemental Conditions for Washington State Facilities Construction.

B. The general Provisions of the Contract, including General, Supplementary, and Special Conditions, and Division 1- General Requirements, apply to work specified in this section. Subcontractor must familiarize himself with the terms of the above documents.

C. EMCS shall monitor electric power, water and natural gas usage as shown in the mechanical and electrical drawings. Control's contractor shall provide meters not provided by the associated utility. Control's contractor shall coordinate with power, water and natural gas utilities.

1.02 BASE AND ALTERNATE BIDS

A. Scope of Work:

1. Furnish and install a direct digital control and energy management system per Section 23 0900 and related sections as required for control of all equipment indicated on the mechanical drawings and in the specifications, being furnished under this scope of work. The server platform (Niagara or approved equal) shall have Connection Points and at least two extra Connection points.

B. Base Bids: No Controls

C. Alternate Bids: Under the base bids, the Controls as by the scope of work will be added as a separate bid line item on the bid form. The following manufacturers and systems are approved for use on this project. No substitutions of systems other than those listed will be considered. Systems approved for bidding are:

1. Approved Controls Contractors:

a. Alerton by ATS

b. Johnson Controls by JCI

c. Siemens by Siemens

d. Honeywell by TRS Mechanical

e. Reliable by Johnson Barrow Controls

1.03 RELATED DOCUMENTS

A. All work of this Division shall be coordinated and provided by the single Energy Management and Controls System (EMCS) Contractor.

B. The work of this Division shall be scheduled, coordinated, and interfaced with the associated work of other trades. Reference the Division 23 Sections for details.

C. The work of this Division shall be as required by the Specifications, Point Schedules and Drawings.

D. If the EMCS Contractor believes there are conflicts or missing information in the project documents, the Contractor shall promptly request clarification and instruction from the design team.

1.04 DEFINITIONS

A. Analog: A continuously variable system or value not having discrete levels. Typically exists within a defined range of limiting values.

B. Binary: A two-state system where an “ON” condition is represented by one discrete signal level and an “OFF” condition is represented by a second discrete signal level each separated by a defined deadband. Digital Inputs and Digital Outputs are examples.

C. Energy Management and Controls System (EMCS): The total integrated system of fully operational and functional elements, including equipment, software, programming, and associated materials, to be provided by this Division EMCS Contractor and to be interfaced to the associated work of other related trades.

D. EMCS Contractor: The single Contractor to provide the work of this Division. This Contractor shall be the primary installer, commissioner and ongoing service provider for the EMCS work.

E. Control Sequence: An EMCS pre-programmed arrangement of software algorithms, logical computation, target values and limits as required to attain the defined operational control objectives.

F. Direct Digital Control: The digital algorithms and pre-defined arrangements included in the EMCS software to provide direct closed-loop control for the designated equipment and controlled variables. Inclusive of Proportional, Derivative and Integral control algorithms together with target values, limits, logical functions, arithmetic functions, constant values, timing considerations and the like.

G. EMCS Network: The total digital on-line real-time interconnected configuration of EMCS digital processing units, workstations, panels, sub-panels, controllers, devices and associated elements individually known as network nodes. May exist as one or more fully interfaced and integrated sub-networks, LAN, WAN or the like.

H. Node: A digitally programmable entity existing on the EMCS network.

I. EMCS Integration: The complete functional and operational interconnection and interfacing of all EMCS work elements and nodes in compliance with all applicable codes, standards and ordinances so as to provide a single coherent EMCS as required by this Division.

J. PC: Personal Computer from a recognized major manufacturer. PC “clones” assembled by a third-party Subcontractor is not acceptable. PC must also have documentation verifying that it has been tested and is completely compatible with all installed software and communicates with any peripherals such as modems, NEC cards, printers, hubs, zip drives, etc. that may be attached.

K. Wiring: The term “Wiring” and its derivatives when used in this Division shall mean provide the EMCS wiring and terminations.

L. Install: The term “Install” and its derivatives when used in this Division shall mean receive at the jobsite and mount.

M. Protocol: The term “protocol” and its derivatives when used in this Division shall mean a defined set of rules and standards governing the on-line exchange of data between EMCS network nodes.

N. Software: The term “software” and its derivatives when used in this Division shall mean all of programmed digital processor software, preprogrammed firmware and project specific digital process programming and database entries and definitions as generally understood in the EMCS industry for real-time, on-line, integrated EMCS configurations.

O. Operator Workstation: Personal Computer from a recognized major manufacturer installed with the software and hardware required to permit multiple, simultaneous (at least three) user access to the EMCS, either remotely or on site.

P. Floor Plans: CAD drawings showing the location of equipment, EMCS controllers, EMCS, remote devices and wiring including room temperature sensors and duct and building pressure sensors, and communications wiring. Controllers, equipment, remote devices and wiring, and communications wiring shall appear on the same drawing.

Q. The following abbreviations and acronyms may be used in describing the work of this Division:

ADC	-	Analog to Digital Converter
AI	-	Analog Input
ANSI	-	American National Standards Institute
AO	-	Analog Output
ASCII	-	American Standard Code for Information Interchange
ASP	-	Microsoft Active Server Page
AWG	-	American Wire Gauge
CFM	-	Cubic Feet Per Minute

CPU	-	Central Processing Unit
CRT	-	Cathode Ray Tube
DAC	-	Digital to Analog Converter
DDC	-	Direct Digital Control
DI	-	(Binary) Digital Input
DO	-	(Binary) Digital Output
EEPROM	-	Electronically Erasable Programmable Read Only Memory
EMCS	-	Energy Management Control System
EMI	-	Electromagnetic Interference
FAS	-	Fire Alarm Detection and Annunciation System
GUI	-	Graphical User Interface
HOA	-	Hand-Off-Auto
HTML	-	Hypertext Markup Language
HTTP	-	HyperText Transfer Protocol
ID	-	Identification
IEEE	-	Institute of Electrical and Electronics Engineers
I/O	-	Input/Output
IP	-	Internet Protocol
IT	-	Information Technology
LAN	-	Local Area Network
LCD	-	Liquid Crystal Display
LED	-	Light Emitting Diode
MCC	-	Motor Control Center
NC	-	Normally Closed
NIC	-	Not in Contract
NO	-	Normally Open
OWS	-	Operator Workstation
OAH	-	Outdoor Air Humidity
OAT	-	Outdoor Air Temperature
PC	-	Personal Computer
RAM	-	Random Access Memory
RF	-	Radio Frequency
RFI	-	Radio Frequency Interference
RH	-	Relative Humidity
ROM	-	Read Only Memory
SMTP	-	Simple Mail Transfer Protocol
SNMP	-	Simple Network Management Protocol
SNTP	-	Simple Network Time Protocol
SPDT	-	Single Pole Double Throw
SPST	-	Single Pole Single Throw
XVGA	-	Extended Video Graphics Adapter
TBA	-	To Be Advised
TCP/IP	-	Transmission Control Protocol/Internet Protocol
UPS	-	Uninterruptible Power Supply
VAC	-	Volts, Alternating Current
VAV	-	Variable Air Volume
VDC	-	Volts, Direct Current
WAN	-	Wide Area Network
XML	-	Extensible Markup Language

1.05 QUALITY ASSURANCE

A. General:

1. The EMCS Contractor shall have a branch facility within a 100-mile radius of the job site supplying complete maintenance and support services on a 24 hour, 7-day-a-week basis. This branch facility shall provide the work for this project. This support facility shall have spare parts and all necessary test and diagnostic equipment required to install commission and service the specified EMCS.

2. As evidence and assurance of the Contractor's ability to support the Owner's system with service and parts, the Contractor must have been in the EMCS business for at least the last ten (10) years and have successfully completed three projects comparable to the value of this contract in the preceding five years

3. The EMCS architecture shall consist of products manufactured by companies regularly engaged in the production of EMCS, and shall be the manufacturer's latest standard of design at the time of bid.

4. The EMCS software residing in Nodes and servers shall be updated to the latest currently available revision at the start of Warranty. If updating any node affects an existing EMCS's ability to communicate to any other existing node on any part of the EMCS, then the contractor shall update any or all existing nodes and workstations to provide seamless communications throughout the entire existing and new system.

B. Quality Management Program:

1. Provide a competent and experienced EMCS Project Manager employed by the EMCS Contractor. The Project Manager shall be supported as necessary by other EMCS Contractor employees in order to provide professional management service for the work. The Project Manager shall attend scheduled Project Meetings as required and shall be empowered to make technical, scheduling and related decisions on behalf of the EMCS Contractor

1.06 REFERENCES

A. All work shall conform to the following Codes and Standards, as applicable:

1. National Fire Protection Association (NFPA) Standards.

2. National Electric Code (NEC) and applicable local Electric Code.

3. Underwriters Laboratories (UL) listing and labels.

4. UL 916 Energy Management

5. NFPA 70 - National Electrical Code.

6. NFPA 90A - Standard for The Installation of Air Conditioning and Ventilating Systems.

7. NFPA 92A and 92B Smoke Purge/Control Equipment.

8. Factory Mutual (FM).

9. American National Standards Institute (ANSI).

10. National Electric Manufacturer's Association (NEMA).

11. American Society of Mechanical Engineers (ASME).

12. American Society of Heating, Refrigerating and Air Conditioning Engineers (ASHRAE).

13. Air Movement and Control Association (AMCA).

14. Institute of Electrical and Electronic Engineers (IEEE).

15. American Standard Code for Information Interchange (ASCII).

16. Electronics Industries Association (EIA).

17. Occupational Safety and Health Administration (OSHA).

18. American Society for Testing and Materials (ASTM).

19. Federal Communications Commission (FCC) including Part 15, Radio Frequency Devices.

20. Americans Disability Act (ADA)

B. In the case of conflicts or discrepancies, the more stringent regulation shall apply.

C. All work shall meet the approval of the Authorities Having Jurisdiction at the project site.

1.07 SUBMITTALS

A. Control Drawings, Product Data, and Samples:

1. The EMCS Contractor shall submit a complete controls package divided in two sections. The first section shall be delivered within 30 days after the contract has been awarded and the second section shall be delivered within 60 days after the contract has been awarded.

2. Allow at least 15 working days for the review of each package by the Engineer.

3. Equipment and systems requiring approval of local authorities must comply with such regulations and be approved. Filing shall be at the expense of the EMCS Contractor where filing is necessary. Provide a copy of all related correspondence and permits to the Owner.

B. Submittal Section 1:

1. Site Specific EMCS network architecture diagrams including all nodes and interconnections including controllers, Operator Workstations, modems and gateways.

2. Product data sheets for all products including software.

C. Submittal Section 2:

1. Drawing Index, floor plans, schematics, controller wiring diagrams and sequences. Control drawings shall be created on AUTOCAD software, version 14 or newer.

2. Points schedule for each real point in the EMCS, including: Tag, Point Type, System Name, Display Units, Scale Range, Unique Address, and Reference Drawing.

3. Samples of Graphic Display screen types and associated menu penetrations to show hierarchy and functional interrelationships.

4. Detailed Bill of Material, identifying part number, quantity, description, and optional features.

5. Room Schedule including a separate line for each terminal unit showing system name, minimum/maximum cfm, box area, and number of reheat stages.

6. Details of all EMCS interfaces and connections to the work of other trades.

7. Tier 1 Ethernet TCP/IP BACnet network criteria including controller IP addressing capabilities, PICS, BIBBS and BTL listings.

1.08 RECORD DOCUMENTATION

A. Operation and Maintenance Manuals:

1. Three (3) copies of the Operation and Maintenance Manuals shall be provided to the Owner's Representative upon completion of the project. The entire Operation and Maintenance Manual shall be furnished on Compact Disc media, and include the following for the EMCS provided:

   a. Table of contents

   b. As-built Control Drawings using AutoCAD Version 14 or newer. Drawings shall represent the as-built condition of the system and incorporate all information supplied with the approved submittal. Include as-built floor plans.

   c. Manufacturer’s product data sheets for all products including software.

   d. System Operator’s manuals.

   e. Archive copy via a read/write CD-ROM all site-specific databases and sequences.

   f. EMCS network diagrams (use AutoCAD version 14 or newer).

   g. Wiring termination diagrams (use AutoCAD version 14 or newer).

   h. Interfaces to all third-party products and work by other trades.

   i. Points list

   j. Room Schedules

   k. Point to point checkout sheets with dates and checkout signatures

   l. Repair contact name and phone number.

2. An Operation and Maintenance Manual CD that shall be a self-contained read/write CD-ROM that includes all of the information listed above and all the necessary viewer software required for access. Include a logically organized table of contents. Viewer software shall provide the ability to display, zoom, and search all documents.

1.09 WARRANTY

A. Standard Material and Labor Warranty:

1. Provide a one-year labor warranty on the EMCS.

2. The EMCS components shall be free from defects in material and workmanship under normal use and service. If within one (1) year from the date of awarding of the Certificate of Occupancy any EMCS equipment is found to be defective, it will be replaced, repaired or adjusted by EMCS Contractor free of charge. The EMCS Contractor is not responsible for the removal or reinstallation of any components that were originally installed by others, such as valves, dampers, wells, air flow stations, etc.

3. Maintain an adequate supply of materials within 100 miles of the Project site such that replacement of key parts and labor support, including programming. Warranty work shall be done during EMCS Contractor's normal business hours unless there is an emergency.

4. Maintain an on-site record of all work done, all items removed from site, all items returned to site, all new replacement items installed and all remedial programming and database entry work undertaken including software revisions installed. Maintain a record of all re-calibrations required as a result of Warranty service.

1.10 OPERATION AND MAINTENANCE REQUIREMENTS OF THIS SECTION

A. Not Applicable

PART 2 - products

2.01 APPROVED MANUFACTURERS

A. Not Applicable

2.02 EMCS DESCRIPTION

A. EMCS shall include a graphical interface that shall allow users to access the EMCS data via a remote Operator Workstation. Remote Operator Workstation access shall take place through a WAN IP address access program, a WEB based internet access, or modem dial-up. The WEB graphical user interface shall be setup as described in WEB BASED USER INTERFACE of this specification.

B. The EMCS shall be a complete system designed for use on a Tier 1 Ethernet TCP/IP BACnet network. This functionality shall extend into the equipment rooms. Application nodes located in equipment rooms and similar shall be fully IT compatible devices that mount and are capable of communicating directly on the IT infrastructure existing in the facility. If Owner's LAN is used contractor shall be responsible for coordination with the Owner's IT staff to ensure that the EMCS will perform in the Owner's environment without disruption to any of the other activities taking place on that LAN. Where necessary and as dictated elsewhere in these Specifications, Servers shall be used for the purpose of providing a location for archiving system configuration data, and historical data such as trend data and operator transactions.

C. The work of the single EMCS Contractor shall be as defined individually and collectively in all Sections of this Division specifications together with the associated Point Sheets and Drawings and the associated interfacing work as referenced in the related documents as are listed in Part 1 of this Section.

D. The EMCS work shall consist of the provision of all labor, materials, etc. as Specified in these Division documents which are required for the complete, fully functional and commissioned EMCS.

E. Provide a complete, neat and workmanlike installation. Use only employees who are skilled, experienced, trained, and familiar with the specific equipment, software and configurations to be provided for this Project.

F. Manage and coordinate the EMCS work in a timely manner in consideration of the Project schedules. Coordinate cooperatively with the associated work of other trades so as to assist the progress and not impede or delay the work of associated trades.

G. The EMCS as provided shall incorporate, at minimum, the following integrated features, functions and services:

1. Operator information, alarm management and control functions at any Operator's Workstation without the need to purchase special software from the EMCS manufacturer for those consoles.

2. Software and hardware that allows third party access for the purpose of creating a combined graphical interface. The combined graphical interface shall have the ability to read, write and acknowledge actual hardware inputs and outputs, setpoints, off/on switches, schedules, alarms and trend logs.

3. Information management including monitoring, transmission, archiving, retrieval, and reporting functions.

4. Diagnostic monitoring and reporting of EMCS functions.

5. Offsite monitoring and management.

6. Energy management.

7. Fire Alarm System secondary monitoring.

8. Lighting Control System monitoring and control.

9. Irrigation System monitoring and control.

H. Graphic Displays:

1. Provide color graphics for each system with all points as indicated on the point list. All graphics shall be available for viewing on any Operator Workstation directly or remotely connected to the Tier 1 TCP/IP BACnet network.

2. Provide a color graphic display for each floor in the facility. Indicate each HVAC zone and temperature, Lighting Control System zone status, and zone occupancy status.

3. User shall access the various system schematics and floor plans via a graphical penetration scheme and menu selection.

2.03 EMCS ARCHITECTURE

A. Overall Conceptual Description:

1. The EMCS shall be designed entirely for use on intranets and internets. All networking technology used at the Tier 1 Ethernet TCP/IP level shall be off the shelf, industry standard technology fully compatible with other Owner provided networks in the facility.

2. The primary components of the system will be the Operator Workstations, Application Nodes and Servers located at the highest level of the network architecture. All will use the same graphical user interface and provide the same level of accessibility via the network. The only distinction between the user interface used on servers as compared to Application Nodes or Operator Workstations shall be select menu items used for accessing long term storage features on the servers or on their respective archive devices (CD/RW, etc.)

B. General:

1. The EMCS shall consist of a number of Nodes and associated equipment connected by industry standard network practices. All communication between Nodes shall be by digital means only.

2. The EMCS network shall at minimum comprise of the following:

a. Operator Workstations– fixed or portable.

b. Network processing, data storage and communication equipment.

c. Routers, bridges, switches, hubs, modems and like communications equipment.

d. Active processing Nodes including field panels.

e. Intelligent and addressable elements and end devices.

f. Third-party equipment interfaces.

g. Modem attached to EMCS so that dial-up communication from a remote Operator Workstation is available.

h. Other components required for a complete and working EMCS.

i. All EMCS features shall be accessible via a graphical interface. All programming shall be accessible by intranet Operator Workstations. Intranet access and Internet browser shall have equivalent EMCS access control for user access.

j. The EMCS shall support auto-dial/auto-answer communications to allow EMCS Nodes to communicate with other remote EMCS Nodes via standard analog telephone lines.

k. The Operator Workstations, File servers and principal network equipment shall be standard products of recognized major manufacturers and shall have documentation stating that have been tested and are fully functional using the EMCS software.

l. Provide licenses for all software residing in the EMCS system and transfer these licenses to the Owner prior to completion.

C. Network:

1. The EMCS shall incorporate a primary Tier 1 Ethernet TCP/IP network. At the Contractor's option, the EMCS may also incorporate integrated secondary Tier 2 and tertiary Tier 3 networks.

2. The EMCS Network shall utilize an open architecture capable of all of the following:

a. Utilizing standard Ethernet communications and operate at a minimum speed of 10/100 Mb/sec

b. Connecting via BACnet at the Tier 1 level in accordance with ANSI/ASHRAE Standard 135-2001.

c. All Tier 2 (subnet) level communications shall be via BACnet in accordance with ANSI/ASHRAE Standard 135-2001. Gateways may be employed to communicate with existing or third-party system controllers.

3. The EMCS network shall support both copper and optical fiber communication media.

D. Third-Party Equipment Interfaces:

1. EMCS Contractor shall integrate real-time data from systems supplied by other trades as required in Part 3.03 THIRD PART EQUIPMENT INTERFACE.

2. The EMCS system shall include necessary EMCS hardware equipment and software to allow data communications between the EMCS system and systems supplied by other trades.

3. The trade Contractor supplying other systems will provide their necessary hardware and software and will cooperate fully with the EMCS Contractor in a timely manner to ensure complete data integration.

E. Uninterruptible Power Supply (UPS):

1. Provide UPS for non-remote intranet Operator Workstations and servers, and any other equipment as indicated on the drawings.

2. UPS shall be sized to last 30 minutes.

F. Power Fail/Auto Restart:

1. Provide for the automatic orderly and predefined startup of parts or all of the EMCS following total loss of power to those parts or all of the EMCS. Archive and annunciate time and details of restoration.

2. Provide for the orderly and predefined scheduling of controlled return to normal, automatically time scheduled, operation of controlled equipment as a result of the auto restart processes.

3. Maintain the EMCS real-time clock operation during periods of power outage for a minimum of 72 hours.

G. Downloading and Uploading:

1. Provide the capability to generate EMCS software-based sequences, database items and associated operational definition information and user-required revisions at any intranet Operator Workstation, and provide the means to download any of the items listed above to its associated Application Node or Terminal Unit Node.

2. Provide the capability to upload EMCS operating software information, database items, sequences and alarms to the designated server.

H. All networking technology used at the Tier 1 level shall be off the shelf, industry standard technology fully compatible with other Owner provided networks in the facility. The Operator Workstations, File servers and principal network equipment shall be standard products of recognized major manufacturers available through normal vendor channels. “Clones” are not acceptable. All aspects of the user interface shall be via graphical interfaces. All other hardware, software, servers, firewalls, etc. shall be provided by the EMCS Contractor. The EMCS Contractor shall coordinate with the Owner and have approval from the Owner for all additions or modifications to the existing IT infrastructure.

2.04 OPERATOR WORKSTATIONS

A. The Operator Workstations shall provide the primary means of communication with the EMCS and shall be used for operations, engineering, management, audit, reporting and other related functions.

B. The Operator Workstations shall consist of fixed and portable units. The fixed units shall consist of installed PC-based configurations. The portable units shall consist of PC Laptops. Both units shall display the same graphics and data.

C. Each Operator Workstation shall, at minimum, consist of:

1. PC processor with minimum 64-bit word structure.

2. Hard drive sized to store several months of trend data for the entire EMCS.

3. Removable high-speed data storage and export device(s) such as Read/Write CD ROM or equal.

4. Full ASCII keyboard and digital Mouse or equal pointing device.

5. Full color, flat screen VDU display unit, minimum 17 inches diagonal screen, minimum 1280 x 1024 resolution, 0.26 or better dot pitch and minimum 72 Hz refresh rate.

6. RAM large enough to provide graphics data updated in 2 seconds or less.

7. Network card capable of providing graphics updates in 2 seconds or less.

D. Printers shall be full color and designed for the functional requirements and duty of the application.

E. All software and hardware required to access the EMCS from the Tier 1 Ethernet TCP/IP BACnet network. Read and write functions for hardware inputs and outputs, alarms, schedules and trend logs along with application programming abilities shall be included. Also include hardware/software access for at least three simultaneous users.

F. Operator Workstations shall operate independently and concurrently without interference and under individual user password protection.

G. Operator Workstations shall have software that shall provide functional access level defined individual operator access.

2.05 OPERATOR WORKSTATION SOFTWARE

A. General:

1. The EMCS Operator Workstation software shall be user friendly, readily understood and shall make maximum use of colors, graphics, icons, embedded images, animation, text-based information and data visualization techniques to enhance and simplify the use and understanding of the EMCS by authorized users at the OWS.

2. User access to the Operator Workstation shall be protected by a flexible and Owner redefinable software-based password access protection. Password protection shall be multi-level and partitionable to accommodate the varied access requirements of the different user groups. Provide the means to define unique access privileges for each individual authorized user. Also provide the means to establish general password groups to which an individual will then be assigned. Once assigned to the group each individual will assume all the capabilities and restrictions of that group. Provide the means to on-line manage password access control under the control of a Master Password.

3. The Operator Workstation software shall be able to combine data from any and all of the system components in a single graphic window. This shall include historical data stored on a server.

4. The Operator Interface shall incorporate comprehensive support for functions including, but not necessarily limited to, the following:

   a. User access for selective information retrieval and control command execution

   b. Monitoring and reporting

   c. Alarm, non-normal, and return to normal condition annunciation

   d. Selective operator override and other control actions

   e. Information archiving, manipulation, formatting, display and reporting

   f. EMCS internal performance supervision and diagnostics

   g. On-line access to user HELP menus

   h. On-line access to current EMCS as-built records and documentation

i. Ability to re-program and re-configure all Application and Terminal Unit Nodes

5. Provide EMCS reports and displays making maximized use of simple English language descriptions and readily understood acronyms, abbreviations and the like to assist user understanding and interpretation. All text naming conventions shall be consistent in their use and application throughout the EMCS.

6. Shall operate on latest operating system.

7. Each fixed and portable Operator Workstation shall be on-line configurable for specific applications, functions and groups of EMCS points.

8. Any existing workstation software must be upgraded to most current manufacturers control software platform.

B. Navigation Trees:

1. The system will have the capability to display multiple navigation trees that will aid the operator in navigating throughout all systems and points connected. At minimum provide a tree that identifies all systems on the networks.

2. The navigation trees shall appear as part of the display, but can be detached and then minimized to the Windows task bar or closed altogether. A simple keystroke will reattach the navigation to the primary display of the user interface.

C. Dividable Display Panels:

1. It shall be possible for the operator to divide the display area within a single window into multiple display panels. The content of each display panel can be any of the standard summaries and graphics provided by the system.

2. Provide each display panel with minimize, maximize, and close icons.

D. Alarms:

1. Alarms shall be routed directly from Application Nodes to Operator Workstations and servers. It shall be possible for specific alarms from specific points to be routed to specific Operator Workstations and servers. The alarm management portion of the EMCS software shall, at the minimum, provide the following functions

a. Log date and time of alarm occurrence.

b. Generate a “Pop-Up” window, with audible alarm, informing a user that an alarm has been received.

c. Allow a user, with the appropriate security level, to acknowledge, temporarily silence, or discard an alarm.

d. Provide an audit trail on hard drive for alarms by recording user acknowledgment, deletion, or disabling of an alarm. The audit trail shall include the name of the user, the alarm, the action taken on the alarm, and a time/date stamp.

e. Provide the ability to direct alarms to an e-mail address or alpha-numeric pager. This must be provided in addition to the pop-up window described above. Systems which use e-mail and pagers as the exclusive means of annunciating alarms are not acceptable.

f. Any object in the system may be designated to report an alarm.

2. The EMCS shall annunciate diagnostic alarms indicating system failures and non-normal operating conditions

E. Reports:

1. Reports shall be generated and directed to one or more of the following: User interface displays, printers, or archive at the user's option. As a minimum, the system shall provide the following reports:

a. All points in the EMCS, especially those points connected to any metering equipment

b. All points in each EMCS application

c. All points in a specific Application or HVAC Node

d. All points in a user-defined group of points

e. All points currently in alarm in an EMCS application

f. All points locked out in an EMCS application

g. All EMCS schedules

h. All user defined and adjustable variables, schedules, interlocks and the like

i. EMCS diagnostic and system status reports

2. Provide for the generation by the user of custom reports.

F. Dynamic Color Graphics:

1. An unlimited number of graphic displays shall be able to be generated and executed.

2. Values of real time attributes displayed on the graphics shall be dynamic and updated on the displays.

3. The graphic displays shall be able to display and provide animation based on real-time EMCS data that is acquired, derived, or entered.

4. The user shall be able to change values (setpoints) and states that affect the system-controlled equipment directly from the graphic display.

5. Provide a graphic editing tool that allows for the creation and editing of graphic files. It shall be possible to edit the graphics directly while they are on line, or at an off-line location for later downloading.

6. EMCS system shall be provided with a complete user expandable symbol library containing all of the basic symbols used to represent components of a typical EMCS system. Implementing these symbols in a graphic shall involve dragging and dropping them from the library to the graphic.

7. All points on graphics shall be identified by their unique point addresses. Addresses may appear in “pop-up” screens associated with the point on the graphic.

G. Schedules:

1. The system shall provide multiple schedule input forms for automatic EMCS time-of-day scheduling and override scheduling of EMCS operations. At a minimum, the following spreadsheet types shall be accommodated:

   a. Weekly schedules.

   b. Temporary override schedules.

   c. Special “Only Active If Today Is a Holiday” schedules.

   d. Monthly schedules.

2. Schedules shall be provided for each system or sub-system in the EMCS. Each piece of equipment in each system may have a unique schedule of operation relative to the system use schedule, allowing for sequential starting and control of equipment within the system. Scheduling and rescheduling of points shall be accomplished easily via the system schedule graphics.

3. Monthly calendars for a 12-month period shall be provided that allow for simplified scheduling of holidays and special days in advance. Holidays and special days shall be user-selected via schedule graphics, and shall automatically reschedule equipment operation as previously defined on the weekly schedules.

H. Historical Trending and Data Collection:

1. Trend and store point history data for all EMCS points and values as selected by the user for five (5) years.

2. The trend data shall be stored in a manner that allows custom queries and reports using industry-standard software tools.

3. At a minimum, provide the capability to perform statistical functions on the historical database:

a. Average.

b. Arithmetic mean.

c. Maximum/minimum values.

d. Range – difference between minimum and maximum values.

e. Standard deviation.

f. Sum of all values.

g. Variance.

I. Paging:

1. Provide the means of automatic e-mail and/or telephone type paging of personnel for user-defined EMCS events.

a. Users shall have the ability to modify the address identifier or message to be displayed on the e-mail or telephone type pager through the system software.

b. Contractor shall be responsible for providing connection to the e-mail or telephone type paging service.

2.06 WEB BASED USER INTERFACE

A. The EMCS shall have the ability to provide a web based graphical interface that allows users to access the EMCS data, configure data, commission, archive data, monitor, command, edit and perform system diagnostics via the Internet. The interface shall us HTML based ASP pages or HTTP, IP, SNTP, SMTP, SNMP, and XML to send and receive data from the EMCS system to a web browser.

B. All information exchanged over Internet shall be encrypted and secure (all hardware and software provided by EMCS Contractor).

C. The Owner shall be able to access data in the EMCS, intranet or internet with any type of computer (desktop or laptop) that runs standard Web browser software. The Web browser shall be set up to access the EMCS system directly over the IP network or via the Internet or Public telephone service for remote operation and system fault diagnosis.

D. The EMCS system shall recognize legitimate users through the entry of a user ID and a password at the Web browser user interface. User access data shall be encrypted in the transmission and in the EMCS system database and user profiles and accounts are managed at a site or system level by the user's security administrator. The authorization levels range from configuring the complete system to only viewing one section of the system or site. The system administrator shall assign a user ID, password, and specific data access privileges in each user account.

E. Access to the Web interface shall be password protected. A user's rights and privileges to points and graphics will be the same as those assigned at the EMCS workstation. An option will exist to only allow users "read" access via the Web browser, while maintaining "command" privileges via the EMCS workstation.

F. The Web-based interface shall provide the following functionality to users, based on their access and privilege rights:

1. Logon Screen: allows user to enter their user name, password and Domain name for logging into the web server.

2. Alarm Display: a display of current EMCS alarms to which the user has access will be displayed. Users will be able to acknowledge and erase active alarms, and link to additional alarm information including alarm messages, and informational and memo text. Any alarm acknowledgements initiated through the Web interface will be written to the EMCS central workstation activity log.

3. Graphic Display: display of system graphics available in the EMCS workstation will be available for viewing over the web browser. A graphic selector list will allow users to select any graphics to which they have access. Graphic displays will automatically refresh with the latest change of values. Users will have the ability to command and override points from the graphic display as determined by their user accounts rights.

4. Point Details: users will have access to point detail information including operational status, operational priority, physical address, and alarm limits, for point objects to which they have access rights.

5. Point Commanding: users will be able to override and command points they have access to via the web browser interface. Any commands or overrides initiated via the web browser interface will be written to the EMCS central workstation activity log.

6. Programming Capabilities: shall be excluded for web browser application.

G. EMCS Contractor shall provide licenses for all software residing in the EMCS system. Provide EMCS software and web server site licenses allowing concurrent access by three (3) browser connections. Transfer these licenses to the Owner prior to completion.

H. Internet connections and ISP services shall be provided by the Owner as required to support the web access feature.

2.07 WEB BASED SERVER

A. Web access software shall be installed as described below shall support browser access via the most current version of Microsoft Internet Explorer, or Navigator Netscape. Include Server software using standard Client Access Licenses (CALs) with enabled Terminal Services software. Server software can be installed on an Operator's Workstation.

B. Provide standard Client Access Licenses (CALs) for every concurrent user that may access the server (minimum of 3 concurrent users). In addition to the standard CALs for the operating system, every remote computer that accesses the server shall be provided with a reciprocating operating system (minimum of 3 concurrent users). All licenses shall be purchased by the Contractor.

C. Equip servers with the same EMCS tool set for graphic and system configuration and custom logic definition. Access to all information on the server will be through the same graphical user interface software used to access the EMCS system. When logged onto a server the operator will be able to also interact with any of the controllers in the facility.

D. The hardware platform for the server will, at minimum, consist of

1. Processor capable of supporting graphic data updates for 3 concurrent users under 2 seconds.

2. RAM capable of supporting 3 concurrent users with graphics updates 2 seconds or less.

3. Operating Systems software consistent with the EMCS

4. Terminal system software consistent with the EMCS

5. Server software consistent with the EMCS

6. Network card capable of supporting graphic data updates for 3 concurrent users under 2 seconds.

7. CD-ROM drive

8. Hard drive sized to store 5 years of trended data for all points connected to the server.

9. Current version of Internet software consistent with the EMCS.

2.08 NODES

A. Application Nodes:

1. Application nodes shall perform the function of monitoring system variables, both from real hardware points, software variables, and controller parameters such as setpoints that are relevant to its operation.

2. Application Nodes shall be entirely solid-state devices. No rigid disk drives will be permitted in the equipment rooms.

3. The application nodes shall be capable of managing and directing all information traffic on the Tier 1 network, between the Tier 1 and Tier2 networks, and to servers.

4. Any node on the Tier 1 network shall be equipped with all software necessary to interface with a Tier 1 Operator Workstation via network or local port.

5. The operating system of the Application Node shall support multi-user access. At minimum three users shall be able to access the same application node simultaneously.

6. Communication between nodes shall be peer-to-peer via 10/100 Ethernet using the BACnet protocol.

7. The Application Node shall be capable of direct connection to a subnet. The subnet shall use BACnet communications per ANSI/ASHRAE Standard 135-2001.

8. Application Nodes shall be programmable and governed by the requirements of their applicable codes, approvals and regulations. Configurable nodes are not acceptable.

9. The Application Nodes shall be designed, packaged, installed, programmed and commissioned in consideration of their specific service and prevailing operating conditions. They shall be proven standard product of their original manufacturer and not a custom product for this Project.

10. A failure at an Application Node shall not cause failures or non-normal operation at any other Application Node or subnet node other than the possible loss of active real-time information from the failed Application Node.

11. Application Nodes shall comply with FCC Part 15 subpart J Class A emission requirements.

12. Each Application Node shall be equipped with battery back-up source.

13. Application Nodes shall be physically separate from server hardware and software, reside in the building, and be the only means of EMCS data transfer to the server. Application node shall be a complete off the shelf software/hardware package manufactured by a licensed Application node manufacturer.

B. HVAC Node:

1. HVAC Node shall provide both standalone and networked direct digital control of HVAC systems.

2. A dedicated HVAC Node shall be configured and provided for each primary HVAC system (air handler, chiller, boiler) and each terminal HVAC system (VAV Box, Unit Heater, Fan Coil Unit, Cabinet Heater, Heat Pump, Fan Powered Box, CV Box)

3. Each HVAC Node shall retain program, control algorithms, and setpoint information in non-volatile memory in the event of a power failure, and shall return to normal operation upon restoration of power.

4. Each HVAC Node shall report its communication status to the EMCS. The EMCS shall provide a system advisory upon communication failure and restoration.

5. The HVAC Node shall provide the ability to download and upload configuration data, both locally at the Node and via the EMCS communications network.

6. HVAC nodes connected directly to the Tier 1 network shall be subject to all of the conditions listed in Section 2.07.A Application Node.

7. Configurable rather than programmable nodes may be used, but must perform specified sequences. The configurable nodes shall be replaced at the Contractor's expense if during the design, checkout or warranty periods it is discovered that the configurable node cannot adequately perform the specified sequence.

2.09 NODE SOFTWARE

A. Application and HVAC Node Software:

1. Event Messaging: Provide for the automatic execution of user-defined messages on the occurrence of each predefined EMCS real-time event including equipment/point status change, approaching limit or alarm, time of day and the like. Direct messages to any number of operator PCs, e-mail destinations, and pagers.

2. Optimum Start/Stop: Provide software to start equipment on a sliding schedule based upon indoor and outdoor conditions, to determine the minimum time of HVAC system operation needed to satisfy the space environmental requirements. The program shall also determine the earliest possible time to stop the mechanical systems. The optimum start/stop program shall operate in conjunction with, and be coordinated with, the scheduled start/stop and night setback programs.

3. Auto Alarm Lockout: Provide for scheduled and automatic lockout of alarm annunciation from equipment during non-normal operating conditions including shutdown, emergency power operation, fire alarm and the like.

4. Energy Monitoring: Provide software to monitor and totalize consumption as measured by pulse meters.

5. Event Initiated Programs and Custom Logic: Provide software to define custom logic sequences that will reside in the nodes. The definition software will also reside in the node and be accessible via the network or direct connected workstation.

6. System Restart: Upon restoration of the AC power to an HVAC Node, automatically restart all equipment and restore all loads to the state as required by the EMCS. Provide appropriate time delays to prevent demand surges or overload trips.

7. Equipment Delays: The system shall provide protection against excessive demand situations during start-up periods by automatically introducing time delays between successive start commands.

8. Runtime Totalization: Automatically sample, calculate and store runtime hours for binary input and output points as listed in the point schedule of this specification.

9. Analog/Pulse Totalization: Sample, calculate and store consumption totals on a daily, weekly, or monthly basis for user-selected analog and binary pulse input-type points.

10. Setpoints and Setpoint Ranges: All setpoints and their ranges shall be accessible via an Operator's Workstation.

PART 3 - PERFORMANCE/EXECUTION

3.01 EMCS SPECIFIC REQUIREMENTS

A. Temperature Sensors:

1. Office and classroom temperature sensors shall have pushbutton interface capabilities that allow for occupied/unoccupied override and adjustable setpoint unless otherwise specified on drawings. Sensors shall be capable of displaying room temperature and setpoint and shall be capable of a 5-degree F deadband between cooling and heating.

2. Gyms, hallways and other high traffic areas subject to abuse shall have stainless steel, flush mounted, plain front temperature sensors.

3. Room temperature sensors shall be mounted 48" ADA unless otherwise specified on drawings. Verify locations with customer representative.

B. Operator Workstation Schedule:

1. One (1) desktop workstation and (1) laptop capable of displaying all system graphics and accessing the data and control code in all controllers. Confirm PC type with customer representative. Workstation count does not include separate servers, if separate servers are necessary for system operation.

2. Supplied workstations shall have all software and hardware required for optional dial-up, website remote access, and multiple user access.

3. Workstations shall be fully tested and certified compatible with all EMCS software

C. Actuation / Control Type:

1. Primary Equipment:

a. As a default, spring return is required in all equipment exposed to outside air and/or fail-safe situations.

b. All air handling equipment damper and valve actuation shall be electric, spring return and proportionally controlled.

c. Air handling equipment is defined as any unit with outside air intake.

d. All valves associated with units directly processing outside air and the main hydronic system shall have mechanical override capabilities.

e. All 120 VAC driven actuators shall have disconnects in accordance with electrical standards.

2. Terminal Equipment:

a. Terminal Air Boxes (VAV, etc.) shall have electric damper and valve actuation. 3-point floating actuation is acceptable.

b. Hydronic Based Heaters shall have electric actuated valves with electric thermostat control.

D. Current Sensors and Current Switches:

1. Install on all fans including fan terminal boxes, heat pumps fans, and exhaust fans. Install on all hydronic pumps. Install on all compressors.

2. Use sensor types that provide detection of belt breakage when belt driven equipment is used.

3. As default, all variable speed motors shall have current sensors on their power input if manufacturer variable speed motor status is not available.

E. Extra HVAC Node Physical Hardware Points:

1. All HVAC nodes controlling major hydronic system elements such as chillers, boilers, main system valves and pumps, and major outside air system units such as AHUs, HPs, Split-Systems, and Gas Furnaces, shall have one unused universal input, analog output, and digital output.

F. Adjust room numbers and floor plans on graphics as necessary to reflect actual conditions.

G. Meters:

1. Water Meters:

a. Install with built in strainers, locking nuts, gaskets and coupling pieces.

b. Installation by Division 23.

c. Totalizing pulse output type, accuracy shall be 2% of rate fluid.

d. Turbine style meter.

e. Maximum pressure drop shall be less than 3 psi at design flow rates or meter size to match pipe size.

2. Gas Meter:

a. Installation by Division 23.

b. Diaphragm meter with self-lubricating bearings.

c. Capacity and line pressure to match building requirements.

d. Include totalizing pulse option.

3. Power Meter:

a. Meter measures Accumulated Real Energy (kWh), Instantaneous Peak (kW); Current (amps), Maximum Peak (kW) for all phases and in total.

b. Meter shall communicate using BACnet MS/TP protocol and shall be compatible with EMCS.

c. Meter shall include all current transformers, fuses, resistors, power transformers and enclosures.

d. CT installation by Division 26. Coordinate CT type with EC. Solid core CT's preferred.

e. Default power reading every 15 minutes.

H. Wireless Temperature Sensor System:

1. Overall System: The Contractor and/or Installation Firm shall provide fully supervised wireless temperature sensing equipment by operating above 900MHZ frequency band. To provide extended range for larger installations, wireless repeaters are available. In order to provide maximum reliability and interference immunity, all wireless sensors (transmitters and repeaters) shall use a spread spectrum, frequency-hopping technique, which sends redundant messages across a bandwidth that is at least 10MHz wide.

a. The wireless sensors and repeaters shall be capable of periodically transmitting check-in signals to monitor the integrity of their wireless links. These transmitters and repeaters shall be able to be programmed for check-in transmissions that occur as frequently as every 60 seconds. The information provided in these check-in messages shall at least include battery condition status and tamper status or temperature data.

b. Wireless receivers shall resolve signals from the transmitters and repeaters specifically registered into the system, even in the presence of RF interference. The receivers shall interface to a direct serial data interface on an Andover Controls Corporation CS type Net Controller.

2. Repeater: To accommodate wireless temperature applications in large commercial and industrial facilities, or to support future site expansion or remodeling, a repeater product shall be available to increase data transmission range. This repeater must provide at least 200 milliwatts of effective radiated RF power. The repeaters shall have the ability to communication with other repeaters, thus allowing for multiple repeaters to be installed as a micro-cellular network. Data and supervisory check-in signals from transmitters must be maintained reliably with multiple repeaters in the system. The repeater shall NOT require a home run wire back to the receiver.

   a. Open Field Transmit Range: 4 miles

   b. Ambient Operating Temp: 32°F to 140°F

3. Wireless Sensors (Transmitters): The wireless equipment shall include either a transmitter with an external temperature probe attached to a terminal block or a sensor with an on-board thermistor. In addition to measuring and temperature data, the sensor shall be capable of monitoring and transmitting Delta R (change in resistance).

   a. Open Field Transmit Range: 2500 feet

   b. Ambient Operating Temp: 32°F to 140°F

4. Receivers: The wireless equipment shall include receivers that decode valid temperature system transmission. Receivers can support hundreds of temperature transmitters.

   a. Ambient Operating Temp: 32°F to 140°F

5. Wireless Survey Tool: A portable, hand-held, easy-to-use survey kit shall be available that will measure transmitter signal strength as well as signal margin (dBm above background noise of received signals). The survey kit shall have the ability to determine the performance of the transmitters to be installed, and if necessary, the amount and locations of wireless repeaters.

6. Quality Assurance: To ensure consistent product quality, the wireless equipment manufacturer shall be ISO9001 registered with an active certification.

3.02 INSTALLATION PRACTICES

A. EMCS Wiring:

1. All conduit, wiring, accessories and wiring connections required for the installation of the Energy Management System, as herein specified, shall be provided by the EMCS Contractor unless specifically shown on the Electrical Drawings under Division 26 Electrical.

2. The EMCS contractor is responsible for coordinating with the Electrical contractor (At EMCS Contractors' expense) to furnish and install any additional line voltage circuits, line voltage wiring, line voltage panels, and associated line voltage appurtenances not shown on the Electrical Drawings as required to provide a compete and functioning EMCS system, regardless of the quantity or presence of EMCS circuits shown on the Electrical Drawings.

3. All wiring shall comply with the requirements of applicable portions of Division 26 and all local and national electric codes, unless specified otherwise in this section.

4. All EMCS wiring materials and installation methods shall comply with EMCS manufacturer recommendations.

5. The sizing type and provision of cable, conduit, cable trays, and raceways shall be the design responsibility of the EMCS Contractor. If complications arise, however, due to the incorrect selection of cable, cable trays, raceways and/or conduit by the EMCS Contractor, the Contractor shall be responsible for all costs incurred in replacing the selected components.

6. Wire/conduit ratios shall follow the same wire/conduit ratios included in Division 26.

7. Class 2 Wiring:

    a. All Class 2 (24VAC or less) wiring shall be installed in conduit or be plenum rated and shall be installed in accordance with local code requirements.

    b. Conduit is not required for Class 2 wiring in concealed accessible locations. Inaccessible locations such as "hard lid" ceilings require conduit.

    c. Wire supports and be installed per local wiring code requirements. As a default, wire shall be supported every 5' from the building structure utilizing metal hangers designed for this application.

    d. Where it is not possible to conceal raceways in finished locations, surface raceway (Wiremold) may be used as approved by the Engineer.

    e. All conduits and raceways shall be installed level, plumb, at right angles to the building lines and shall follow the contours of the surface to which they are attached.

    f. Provide firestopping for all penetrations used by dedicated EMCS conduits and raceways using approved fire resistive sealant. All other project firestopping to be by other trade.

g. All wiring passing through penetrations, including walls or other structure, shall be in conduit or enclosed raceway.

h. Penetrations of floor slabs shall be by core drilling. All penetrations shall be plumb, true, and square.

i. No penetrations in structural elements shall be made before receipt of written approval from the Structural Engineer.

8. Class 2 signal wiring and 24VAC power can be run in the same conduit. Power wiring 120VAC and greater cannot share the same conduit with Class 2 signal wiring.

9. Perform circuit tests using qualified personnel only. Provide necessary instruments and equipment to demonstrate that:

a. All circuits are continuous and free from short circuits and grounds.

b. All circuits are free from unspecified grounds; that resistance to ground of all circuits is no less than 50 megaohms.

c. All circuits are free from induced voltages.

10. Provide complete testing for all cables used under this Contract. Provide all equipment, tools, and personnel as necessary to conduct these tests.

11. Provide for complete grounding of all signal and communications cables, panels and equipment so as to ensure system integrity of operation. Ground cabling and conduit at the panel terminations. Avoid grounding loops.

B. EMCS Line Voltage Power Source:

1. 120-volt AC circuits used for the EMCS shall be taken from panelboards and circuit breakers provided by Division 26. Control contractor shall be responsible for installing, adding or adjusting all 120-volt AC circuits. Control's contractor shall coordinate all 120-volt AC work with Division 26.

2. Circuits used for the EMCS shall be dedicated to the EMCS and shall not be used for any other purposes.

3. DDC terminal unit controllers may use 120-volt AC power from motor power circuits.

C. EMCS Identification Standards:

1. Node Identification: All nodes shall be identified by a permanent label fastened to the outside of the enclosure. Labels shall be suitable for the node location.

2. Cable and/or conduit shall be labeled at suitable intervals with the EMCS system manufacturer's name. Labeling shall be sufficient to trace cable from device to device.

3. Specify a different wire color for analog, digital, power and communication wiring. Include wiring color on control drawings legends.

4. Raceway Identification: All the covers to junction and pull boxes of the EMCS raceways shall be labeled.

5. Wire Identification: All low and line voltage EMCS wiring shall be identified by a number, as referenced to the associated shop drawing and as-built drawing, at each end of the conductor or cable. Identification number shall be permanently secured to the conductor or cable and shall be typed.

D. EMCS Node Installation:

1. The EMCS panels and cabinets shall be mounted at shoulder height wherever possible. All panels shall be accessible. Each cabinet shall be anchored per the manufacturer's recommendations.

2. The EMCS Contractor shall be responsible for coordinating panel locations with other trades and Electrical and Mechanical Contractors.

E. Input Devices:

1. All Input devices shall be installed per the manufacturer recommendation and shall be of the type and accuracy suitable for this specific application.

2. Locate components of the EMCS in accessible local control panels wherever possible.

3. The Mechanical Contractor shall install all in-line devices such as temperature wells, pressure taps, airflow stations, etc.

4. Input Flow Measuring Devices shall be installed in strict compliance with ASME guidelines affecting non-standard approach conditions.

5. Outside Air Sensors:

a. Sensors shall be mounted on the North wall to minimize solar radiant heat impact or located in a continuous intake flow adequate to monitor outside air conditions accurately.

b. Sensors shall be installed with a rain proof, perforated cover.

6. Water Differential Pressure Sensors:

a. Differential pressure transmitters used for flow measurement shall be sized to the flow-sensing device.

b. Differential pressure transmitters shall be supplied with tee fittings and shut-off valves in the high and low sensing pick-up lines.

c. The transmitters shall be installed in an accessible location.

d. Installation of pipe taps and shutoff valves by Division 23.

7. Medium to High Differential Water Pressure Applications (Over 21” w.c.):

a. Air bleed units, bypass valves and compression fittings shall be provided.

b. Installation of pipe taps, valves and air bleed units by Division 23.

8. Building Differential Air Pressure Applications (-0.25” to +0.25” w.c.):

a. Transmitter’s exterior sensing tip shall be installed with a shielded static air probe to reduce pressure fluctuations caused by wind.

b. The interior tip shall be inconspicuous and located as shown on the drawings.

9. Duct Temperature Sensors:

a. Duct mount sensors shall mount in an electrical box through a hole in the duct and be positioned so as to be easily accessible for repair or replacement.

b. The sensors shall be insertion type and constructed as a complete assembly including lock nut and mounting plate.

c. For ductwork greater in any dimension than 48 inches or where air temperature stratification exists such as a mixed air plenum, utilize an averaging sensor. Sensors shall be installed in a “Z” configuration as default.

d. The sensor shall be mounted to suitable supports using factory approved element holders.

10. Low Temperature Limit Switches:

a. Install on the discharge side of the first water or steam coil in the air stream.

b. Mount element horizontally across coil in a serpentine pattern ensuring each square foot of coil is protected by 1 foot of sensor.

c. For large duct areas where the sensing element does not provide full coverage of the air stream, provide additional switches as required to provide full protection of the air stream.

11. Air Differential Pressure Status Switches:

    a. Install with static pressure tips, tubing, fittings, and air filter.

12. Water Differential Pressure Status Switches:

    a. Install with shut off valves for isolation.

    b. Installation of pipe taps and valves by Division 23.

13. Room Temperature Sensor:

    a. Install sensor with insulation if mounted on an exterior wall.

14. CO2 sensor:

    a. Shall be factory calibrated and be self-calibrating when installed.

    b. Range: 0-2000 ppm.

    c. Accuracy: plus or minus 30 ppm plus 2% of reading.

    d. UL listed.

15. Refrigerant Sensors:

    a. Shall be factory calibrated and be self-calibrating when installed.

    b. Shall be maintenance free.

    c. Range: 0-1000 ppm

    d. Accuracy: plus or minus 25 ppm plus 20% of reading

    e. Ul listed

    f. Shall have audible alarm if levels above 50 ppm are detected.

    g. Shall be 24 VAC or 24 VDC.

F. HVAC Output Devices:

1. All output devices shall be installed per the manufacturer's recommendation and shall be suitable in type and accuracy for this specific application. The Mechanical Contractor shall install all in-line devices such as control valves, dampers, etc.

2. Actuators: All control actuators shall be sized capable of closing against the maximum system shut-off pressure. The actuator shall modulate in a smooth fashion through the entire stroke. When any pneumatic actuator is sequenced with another device, pilot positioners shall be installed to allow for proper sequencing.

3. Electronic Signal Isolation Transducers: Whenever an analog output signal from the EMCS is to be connected to an external control system as an input (such as a chiller control panel), or is to receive as an input a signal from a remote system, provide a signal isolation transducer. Signal isolation transducer shall provide ground plane isolation between systems. It is the Controls Contractor's responsibility to determine if isolation is necessary.

4. Relays: All relays used to start/stop any piece of mechanical equipment that does not have an HOA switch shall have a Closed-Open-Auto override switch located on the load side of the relay.

G. Provide a file that tracks all software changes along with associated login name and password. Start file at beginning of construction process.

3.03 THIRD PARTY EQUIPMENT INTERFACE

A. The EMCS shall utilize the following protocols to communicate with the third-party equipment described in this section:

1. Connecting via Ethernet TCP/IP BACnet at the Tier 1 level in accordance with ANSI/ASHRAE Standard 135-2001.

2. Tier 2 connection specifications shall be via BACnet in accordance with ASNI/AHSRAE Standard 135-2001. Gateways may be employed to communicate to existing or third-party controllers. Objects commonly used for HVAC control shall be accessible. Accessible is defined as the ability to read, write create and acknowledge objects. Objects are defined as input and output points, setpoints, on/off switches, alarms, schedules and trend logs.

B. Each of the following independent systems Contractor shall provide all material and field labor necessary to accomplish interfaces to the EMCS:

1. Fire Alarm System: Fire Alarm System Interface: Fire alarm system and air handling equipment smoke detectors shall be provided under Division 26. Coordinate EMCS requirements with Fire Alarm System Contractor to monitor the Fire Alarm System only. One fire alarm panel contact shall be monitored by the EMCS operator workstation.

2. Lighting Control System: The entire lighting control system shall be provided under Division 26. Coordinate all EMCS Point numbers and requirements with Electrical Contractor. All lighting control system points as shown on the drawings shall be monitored by the EMCS Workstation and shown on graphics as detailed in the EMCS Description Graphic Displays Section (Section 2.01.I). As default, assume all exterior lighting shall be controlled by EMCS.

   a. The Lighting Control Application shall be part of the EMCS System and fully accessible from any Workstation. Point inputs and outputs from the lighting control system shall have real-time interoperability with EMCS software features including circuit status, scheduling and independent overrides.

   b. Include graphical software programming utilizing floor plans and color to communicate information related to lighting zone status and scheduling. The graphical program shall enable operators to manage their lighting system on a day-to-day basis. The user shall navigate within the system to check on the conditions, schedules, etc. by using a 'point and click' interface based upon floor plans and area graphics.

3. Boiler, Chiller and Variable Frequency Drive Control Systems: Whenever possible, use Modbus, BACnet or another communications interface. Verify with manufacturer. If communications interface is unavailable, the Controls Contractor is expected to provide control relays and current sensors to enable/disable and record status and alarm conditions on the unit. Any analog (i.e., setpoint) terminal point interface shall be provided by manufacturer.

3.04 TRAINING

A. The EMCS Contractor shall provide the following training services:

1. Provide two days of on-site orientation by a system technician who is fully knowledgeable of the specific installation details of the project. This orientation shall, at a minimum, consist of a review of the project as-built drawings, the EMCS software layout and naming conventions, and a walk through of the facility to identify panel and device locations. Training may be split into smaller sessions on different days if the Owner prefers.

2. Supply a list of available factory training classes and contact information.

3.05 COMMISSIONING

A. Controls Contractor shall provide the Commissioning Agent with a completed Acceptance Verification document prior to beginning point-to-point activities. Final Acceptance Verification document shall be included in the Commissioning Field Notebook. The commissioning agent may be an independent agent, the customer, or the Design Engineer.

B. Acceptance Verification Document is defined as a series of check sheets that include all EMCS points and functions. Each point entry shall be signed and dated verifying that each point and function has been fully calibrated and tested.

C. The Controls Contractor shall provide qualified technician to support the commissioning requirements outlined in specification Sections 01 6500 and 23 0800. The Controls Contractor shall provide support to the commissioning agent during the performance testing and shall provide trends as needed for their review.

D. Conduct functional performance tests to demonstrate that controls systems maintain setpoints and operates through the full range of operations. The commissioning agent will provide functional tests that the Controls Contractor shall review and provide comments on the tests for incorporation into the final test documents.

E. Provide System Performance Trend Logs as specified by the Design Engineer or commissioning agent to verify that all systems are functioning satisfactorily.

F. Provide all necessary specialist labor, materials and tools to demonstrate to the Engineer that the EMCS has been commissioned and is operating in compliance with the contract. Prepare a list of noted deficiencies signed by both the Engineer and the EMCS Contractor.

G. Promptly rectify all listed deficiencies and submit to the Engineer that this has been done.

H. Final Commissioning:

1. Upon successful completion of Owner-Witnessed Functional Tests, a Performance Period (15 consecutive calendar days) shall commence on the first day following the last performance test. This period shall be completed prior to final acceptance of the project. In event of failure to meet standard of performance during any initiated performance period, it is not required that one 15-calendar day period expire in order for another performance period to begin.

2. If equipment or system operates so as to demonstrate continuing compliance with specified requirements for period of 15 consecutive calendar days from commencement date of performance period, it shall be deemed to have met standard of performance. In addition, equipment or systems shall operate in conformance with all Contract Specifications and with Contractor's bid and published Specifications in effect on date Contract is executed, provided such specifications are equal to or better than specifications submitted with Contractor's bid.

3. Performance period shall be monitored through trend review of controls systems. The Controls Contractor shall be responsible for configuring the controls system to collect trends and shall provide trends to the commissioning agent for review. Typical trend data will be collected on approximately 8 points for each unit and as determined for other systems. Trend data for each unit shall be collected in a single file and all columns in each file shall have descriptive headers. Trend collection or points shall be provided in 15-minute increments.

4. Provide a complete set of trend logs for all HVAC equipment for a 24-hour period on a normally occupied day. Trend points shall be in 15-minute increments and shall include setpoints.

I. Commissioning of the Web interface shall not require modification or creation of HTML or ASP pages. All dynamic graphics and real-time data available at the EMCS graphical workstation shall be available to users via a web browser.

END OF SECTION

SECTION 23 1100

NATURAL GAS

PART 1 - GENERAL

1.01 SUMMARY

A. Includes But Not Limited To: Furnish and install gas piping and fittings.

B. Related Sections:

1. General Conditions, Division 01
2. Section 20 0000 – General Mechanical Requirements
3. Section 22 0529 – Hangers and Supports for Plumbing Equipment
4. Section 22 0548 – Vibration and Seismic Control
5. Section 22 1116 – Domestic Water Pipe and Fittings
6. Section 22 2000 – Excavation and Backfill for Mechanical Underground Utilities

C. The above-mentioned Section applies to this section. Contractor is responsible for all service charges. Charges may be indicated by Architect on bid form.

1.02 QUALITY ASSURANCE

A. Qualifications: Welders shall be certified and bear evidence of certification 30 days prior to commencing work on project. If there is doubt as to proficiency of welder, Owner's Representative may require welder to take another test. This shall be done at no cost to Owner. Certification shall be by Pittsburgh Testing Laboratories or other approved authority.

1.03 SUBMITTAL REQUIREMENTS OF THIS SECTION

A. Pipe

B. Fittings

C. Valves

D. Stops

E. Gas Regulators

F. Gas Solenoid Valve

G. Gas Seismic Valve

1.04 OPERATION AND MAINTENANCE REQUIREMENTS OF THIS SECTION

A. Pressure reducing valve manufacturer's data and pressure setting

B. Solenoid valve manufacturer's data

PART 2 - PRODUCTS

2.01 PIPE

A. Meet requirements of ASTM A 53-87b, "Specification for Piping, Steel, Black & Hot-Dipped Zinc-Coated Welded & Seamless".

B. Schedule 40 black steel pipe

C. Flex Connection: Corrugated 300 Series stainless steel tubing conforming to ASTM A240, ANSI LC-1, and UL Listed Through Penetration Firestop for one (1) hour to four (4) hours. Tubing to be rated for up to 25 psi. Tubing shall be protectively coated against accidental contact with substances shown to be caustic to 300 Series stainless steel. Coating shall be UV resistant.

D. Approved Manufacturers: Wardflex

2.02 FITTINGS

A. Black Pipe: Welded forged steel fittings of ASTM A 234-87, "Specification for Piping Fittings of Wrought Carbon Steel and Alloy Steel for Moderate and Elevated Temperatures," or standard weight malleable iron screwed.

2.03 VALVES (GAS SHUT OFF VALVE)

A. 125 psi bronze body, square head cock, with bronze plug or CSA approved ball valve.

B. Approved Manufacturers: Apollo, Combraco, Nibco, red-white.

2.04 GAS REGULATORS

A. Provide gas pressure regulators, pressures and capacity as scheduled on Plans to reduce medium pressure gas to recommended equipment operating range. Furnish regulators with full size vents and VTR's. Gas regulators shall be by Sensus or approved.

2.05 GAS CABINETS

A. Furnish access panels with non-locking cover. Access panels shall be polished chrome-plated. Cover must be marked "Gas Valve."

2.06 SCIENCE ROOM OUTLETS

A. Furnish and install Chicago Faucet outlet models as scheduled.

1. #982 Turret with 90 deg. outlets

2. #937 valve needlepoint cock with wheel handle (two per turret)

2.07 GAS SOLENOID VALVE

A. Solenoid operated gas shut-off valve shall be rated at 120V. Size valve as required to match supply pipe size. Valve shall operate at required flow rates without pressure drop. The valve shall trip closed when solenoid is de-energized, and shall be manually reset. Manual reset shall have a high visibility position indicator and shall not open until solenoid is energized.

B. Approved Manufacturers: ASCO Series 8044

2.08 GAS SEISMIC VALVE

A. Provide flanged seismic valve. Size valve as required to match supply pipe size and configuration. Valve shall meet California Standards for Earthquake Actuated Automatic Gas Shutoff Systems, Standard No. 12-23-1, ANSI Z 21.70, 1981 and ASCE 25-97 standards.

B. Approved Manufacturers: Pacific Seismic Products

PART 3 - EXECUTION

3.01 INSTALLATION

A. Pipe installed underground, through air plenums, in walls, and pipes 2-1/2 inches and larger shall have welded fittings and joints. Other pipe may have screwed or welded fittings.

B. Machine apply coating and lay underground pipe in accordance with local gas utility company regulations and specifications.

C. Install gas shut off valves on lines serving all gas fired equipment adjacent to or on outside of equipment cabinet and easily accessible.

D. Install dirt leg with pipe cap, 6 inches long minimum, on each vertical gas drop to all gas equipment.

E. Gas piping installed under slab shall be provided in an airtight conduit sealed at floor level. The conduit shall be vented to the exterior. The piping and conduit shall be buried with a minimum of 12" of cover.

F. Paint all piping exposed to elements with 1 coat primer and 2 coats paint to match adjacent surfaces.

G. Provide at main and at each connection to equipment a gas shut-off valve. All risers taken off from main shall be furnished with gas lever shut-off valve. Provide regulators herein before specified complete with vent, enclosures, and shut-off valves for gas-fired equipment, including HVAC equipment and hot water tanks.

H. Furnish union joint as required for removal of each piece of gas equipment.

I. Coordinate gas solenoid valve locations and power requirements with electrical and fire system contractors.

J. Hang aboveground pipe with rods within 12” of structure. If pipe cannot be hung within 12” of structure, provide seismic bracing (including calculations, shop drawings, etc.) per code. Notify Engineer for special inspection of braces.

K. Pressure regulator vents shall be installed to prevent the entry of water, insects and foreign objects.

END OF SECTION

SECTION 23 1119

HVAC PIPING SPECIALTIES

PART 1 - GENERAL

1.01 GENERAL

A. Furnish devices as indicated with complete installation procedures for systems.

1.02 RELATED SECTIONS

A. General Conditions, Division 1

B. Section 20 0000 – General Mechanical Requirements

C. Section 23 0523 – Valves for HVAC Piping

D. Section 23 0529 – Hangers and Supports for HVAC Piping and Equipment

E. Section 23 1123 – Pumps for HVAC Equipment

F. Section 23 2000 – Hydronic System

1.03 SUBMITTAL REQUIREMENTS OF THIS SECTION

A. Thermometers

B. Gauges

C. Strainers

D. Unions

E. Dielectric Unions

F. Flexible Connectors

G. Backflow Prevention Devices

H. Pressure Reducing Valves

I. Expansion Joint Assemblies

1.04 OPERATION AND MAINTENANCE OF THIS SECTION

A. Backflow Prevention Devices

PART 2 - PRODUCTS

2.01 THERMOMETERS

A. Adjustable angle type, 304 stainless steel stem, 5" reading dial type, true anti-parallax-dial black numerals, markings in degrees F., stainless steel, double-strength glass viewing window. Provide sockets with extension necks where installed on insulated piping.

B. Thermometer Temperature Ranges:

Measuring	Range Degree F.	Increments Degree F
Chilled Hydronic Water	0 – 140	2
Hot Hydronic Water	30 - 220	2

C. Approved Manufacturers:

1. Ashcroft
2. March
3. Taylor
4. Tel-Tru
5. Winters
6. Weiss

2.02 PRESSURE GAUGES

A. Glycerin filled type, 2 ½" reading dial with aluminum face and black numerals, markings in English units, 304 stainless steel case and acrylic lens. Provide each gauge with snubber and needle valve. Provide sockets with extension necks where installed on insulated piping.

B. Pressure Gauge Ranges:

Measuring	Range PSIG	Numeral Intervals PSIG	Inter - Graduations
Hydronic	0 – 160	5	1

C. Approved Manufacturers:

1. Ashcroft
2. March
3. Taylor

4. Tel-Tru

5. Winters

6. Weiss

2.03 STRAINERS

A. Water Strainers: "Y" type, same size as the pipe in which they are installed, with cast iron or semi-steel bodies rated for 125 psi working pressure, and with removable cover and sediment basket. Basket screen shall be stainless steel or monel, with a net free area of at least 3 times that of the entering pipe. Provide with blowdown valve where shown on the drawings.

B. Approved Manufacturers:

1. Armstrong

2. Bell and Gossett

3. Conbraco

4. Hoffman

5. Wheatley

6. Victaulic

7. Watts

2.04 UNIONS

A. Unions on Copper Pipe:

1. In 2-Inch Pipe and Smaller: Wrought copper solder joint copper to copper union.

a. Approved Manufacturers:

1) Nibco

2) Watts

3) Mueller

2. In 2-1/2-Inch Pipe and Larger: Brass flange unions.

a. Approved manufacturers:

1) Nibco

2) Watts

3) Mueller

B. Unions on Steel Pipe:

1. In 3-1/2-Inch Pipe and Smaller: Screwed malleable iron with ground joints, brass to iron insert, 150 psi minimum working pressure.

2. In 4-Inch Pipe and Larger: Flange unions, cast or malleable iron.

2.05 DIELECTRIC UNIONS

A. Dielectric Unions: Rated at 250 psi at 180 deg. F., conforming to ANSI B16.39. Type and size to match piping.

B. Approved Manufacturers:

1. Victaulic 647, or prior approved equal

2.06 FLEXIBLE CONNECTORS

A. Water Pump Flexible Connectors: Neoprene twin sphere type, suitable for 225 psi working pressure and 240°F. maximum temperature. Mason Industries or Minnesota Flex same size as pipe installed in.

B. Air and Water Flexible Connectors:

1. Corrugated hose type with outer braided wire sheath covering. Corrugations shall be close pitch annular type. Connector shall have a minimum working pressure of 200 psig, minimum length of 12 inches (or 3 times the connector's nominal diameter, whichever is more), and screwed or flanged end connections. Metal for hose shall be stainless steel; braided sheath shall be 300 series stainless steel.

2. Approved Manufacturers:

a. Metraflex

b. Flex-Hose

c. Approved equal

C. Three (3) Victaulic flexible type couplings in close proximity to rotating equipment such as pumps and chillers when installed per the manufacturer’s latest recommendations.

2.07 BACKFLOW PREVENTION DEVICES

A. Provide letter of certification to Owner.

B. Type and configuration shall conform to local authority requirements.

C. Backflow prevention devices requiring an air gap shall be provided with a Jr. Smith Model 3950 or approved equal.

2.08 PRESSURE REDUCING VALVES

A. Furnish for water service above 70 psi.

1. Type A: 1/2" through 2", adjustable pressure from 25-75 psi, provide "HP" 75-100 psi type if higher pressure Watts "U5".

2. Type B: Adjustable pressure from 25-75 psi Watts "N223F".

2.09 EXPANSION/SEISMIC JOINT ASSEMBLIES

A. Flexible Expansion Loops:

1. Provide flexible expansion loops of size and type as required per the pipe installation. At a minimum provide one (1) expansion loop per 100 feet of straight pipe. Flexible loops shall consist of two flexible sections of hose and braid, two 90° elbows, and a 180° return assembled in such a way that the piping does not change direction, but maintains its course along a single axis. Flexible loops shall have a factory supplied, center support nut located at the bottom of the 180° return, and a drain/air release plug. Flexible loops shall impart no thrust loads to system support anchors or building structure. Loops shall be installed in a neutral, pre-compressed or pre-extended condition as required for the application. Install and guide per manufacturer's recommendations. Materials of construction and end fitting type shall be consistent with pipe material and equipment/pipe connection fittings. For potable water service, connectors shall be UL classified in accordance with ANSI/NSF 61-1088 standards.

2. Approved Manufacturers:

a. Metraflex

b. Flex-Hose

c. Approved equal

B. Externally Pressurized Expansion Joint:

1. Expansion joints to be of the packless, externally pressurized type. Pressure rated for 150 psi @ 700 F or 300 psi @ 700 F. Movement capabilities to be 4”, 6”, or 8” axial movement, as required. All welded construction with multiple ply stainless steel bellows, heavy gauge steel shroud, integral guide rings, and internal liner. System line pressure to be external to the bellows to minimize squirm. Double end joints shall have anchor base to act as intermediate anchor. All joints to be provided with drain connection and lifting lug. All materials of construction, pressure ratings, and end fittings shall be appropriate for the application. Guiding and anchoring per EJMA recommendations and guidelines.

2. Approved Manufacturers:

a. Metraflex MetraGator, or prior approved equal

C. Flexible Grooved Couplings:

1. Provide Victaulic flexible approved system sized for the application and installed in accordance with Victaulic’s “Seismic Applications-Design Data 26.12” application guide.

2.10 PIPE SHIELDS (SADDLES)

A. Pipe shields shall be minimum, 20 gauge galvanize sheet steel.

B. Pipe shield shall cover 40% of the insulation, minimum, where the pipe is supported at the bottom.

C. Pipe shield shall cover 100% of the insulation where the pipe is clamped to the hanger or support.

D. See Section 23 0529-Hangers and Supports for HVAC Piping & Equipment for information on length and gauge.

PART 3 - EXECUTION

3.01 INSTALLATION

A. Thermometers: Install thermometers and thermal wells in piping at locations indicated, and so as to be easily read.

B. Pressure Gauges: Install pressure gauges at each side of pressure reducing valves; and as indicated.

C. Strainers: Install strainers as indicated. Provide plugged gate or ball valve in blow-off connection on strainers, valve shall be same size as blow-off tapping.

D. Unions: Install unions in pipe connections to control valves, coils, regulators, reducers, all equipment, and where it may be necessary to disconnect the equipment or piping for repairs or maintenance; and as indicated.

E. Expansion/Seismic Joint Assemblies: Install every 100 feet of straight length of pipe (pipe runs without any change in direction) unless shown otherwise on drawings.

END OF SECTION

SECTION 23 2100

SLEEVES AND SEALS FOR HVAC PIPING AND EQUIPMENT

PART 1 - GENERAL

1.01 GENERAL

A. Includes sleeving and sealing of piping and ductwork.

1.02 RELATED SECTIONS

A. General Conditions, Division 1

B. Section 22 1116 – Domestic Water Pipe and Fittings

C. Section 23 3113 – Steel Ductwork

D. Section 15900 – Fiberglass Ductwork

1.03 REFERENCES

A. ASTM E814: Fire Tests of Through-Penetration Fire Stops

B. UL 1479: Through-Penetration Fire Stop Systems

1.04 SUBMITTAL REQUIREMENTS

A. Submittal requirements for this Section:

1. Seals

1.05 OPERATION AND MAINTENANCE REQUIREMENTS FOR THIS SECTION

A. Not Applicable

PART 2 - PRODUCTS

2.01 APPROVED MANUFACTURERS

A. Products shall comply with Section 20 0000, paragraph 2.01, Approved Manufacturers.

B. Fire Seals: 3M, Dow Corning, General Electric, Rectorseal Metacaulk

2.02 PIPE SLEEVES

A. Size: Inside diameter of pipe sleeves shall be at least 1/2-inch larger than the outside diameter of the pipe or pipe covering, so as to allow free movement of piping.

B. Ends: Sleeve ends shall be cut flush with finished surfaces, except in rooms having floor drains where sleeves shall be extended 3/4-inch above finished floor.

C. Material - Structural: Sleeves through structural elements shall be fabricated from Schedule 40 steel pipe.

D. Material - Non-structural: Sleeves through non-structural elements shall be fabricated from 18-gauge galvanized sheet metal or 24-gauge spiral duct.

E. De-burr pipe ends and smooth slab penetration (to accept final slab finish) from sleeves extending above finished floor.

2.03 DUCT SLEEVES

A. Size: Inside dimension of sleeves shall be at least ½" larger than the outside dimensions of the duct or duct covering on all sides.

B. Ends: Sleeve ends shall be cut flush with finished surface.

C. Material - Non-structural: Sleeves shall be fabricated from 20-gauge galvanized steel, shall be continuous around the interior without holes or openings, and shall match the configuration of the item being sleeved.

D. Material - Structural: Sleeves through structural elements shall be fabricated from Schedule 40 steel pipe (round openings) and welded steel supporting elements (sizes/arrangement as shown on drawings) for other openings.

2.04 SEALS

A. Seals in Interior Fire Rated Assemblies: Shall be tested in accordance with ASTM E814 and shall be UL classified per UL 1479 as a through-penetration fire stop device.

B. Seals in Exterior Masonry Walls and Floors:

1. Piping: Seals shall consist of interlocking synthetic rubber links shaped to continuously fill the annular space between the pipe and wall opening. The seal assembly shall expand when mechanically tightened to provide an absolute watertight seal between the pipe and wall opening. Sizing shall be per manufacturer's recommendations. Seal shall be Thunderline "Link-Seal" or approved equal.

2. Ducts: Silicone type sealant, designed for use with duct material involved as weatherproof sealant and as specified in Section 07 9200.

C. Seals in Other Areas: Packed fiberglass or wool insulation, where no weatherproofing or adhesive properties are required; otherwise, sealants shall be silicone type, as specified in applicable Division 7 Specification Section.

PART 3 - EXECUTION

3.01 INSTALLATION OF PIPE SLEEVES

A. Provide pipe sleeves for all piping passing through walls, floors, partitions, roofs, foundations, footings, grade beams, and similar elements, except that sleeves are not required for penetrations through existing single solid elements, having no voids, at the location where the piping passes through the solid elements (e.g., solid wood stud, core drilled solid concrete, etc.). Where a sleeve is required, such sleeve shall continue all the way through any solid items within that element.

B. Set sleeves plumb or level (or sloped as required for drainage pipe) in proper position, tightly fitted into the work.

C. Fill openings around outside of pipe sleeve with same material as surrounding construction, or with material of equivalent fire and smoke rating.

D. Seal around all pipes inside of pipe sleeve.

E. Insulation shall run continuous through sleeves in non-fire rated elements. Insulation shall not run continuous through sleeves in fire rated elements unless the fire sealant system used is UL accepted for use with insulated pipes.

F. Do not place sleeves around soil, waste, vent, or roof drain lines passing through concrete floors on grade.

3.02 INSTALLATION OF DUCT SLEEVES

A. Provide duct sleeves for all round ducts less than 15 inches in diameter where the duct passes through any floors, walls, ceilings, partitions, or roofs and similar elements.

B. Provide duct sleeves for all square and rectangular ducts having their largest dimension 14 inches and less where the duct passes through any floors, walls, ceilings, partitions, roofs, and similar elements.

C. Round ducts larger than 15 inches in diameter, and square or rectangular ducts larger than 14 inches in any dimension, shall have framed openings where the duct passes through any element. Such framed openings shall be of the same type as the structural materials used in the wall and shall comply with materials specified for this project. Sleeves shall be provided in addition to the framed opening where any void space(s) occurs through the penetration (as through CMU walls, double walls, etc.).

D. Set sleeves plumb or level, in proper position and location, tightly fitted into the work.

E. Fill openings around outside of duct sleeve with same material as surrounding construction, or with material of equivalent fire and smoke rating.

F. Sleeves are not required for penetrations through existing single solid elements, having no voids, at the location where the duct passes through the element (e.g., precast concrete panels with pre-framed openings, core drilled/saw cut solid concrete, etc.). Where a sleeve is required, such sleeve shall continue all the way through any solid items within that element however.

G. Insulation shall run continuous through sleeves in non-fire rated elements. Insulation shall not run continuous through sleeves in fire rated elements unless the fire sealant system used is UL accepted for use with insulated pipes.

H. Sleeves for fire dampers shall be as specified for fire dampers and be in compliance with the damper UL listing.

3.03 INSTALLATION OF SEALS

A. Provide seals around all piping and ducts passing through walls, floors, roofs, foundations, footings, grade beams, partitions, and similar elements.

B. Seals shall be of material and workmanship to maintain the fire and smoke rating of element being penetrated. Seals ability to maintain the rating of the element being penetrated shall be listed in UL Laboratories Building Materials Directory or otherwise confirmed by an approved listing agency. It shall be the Contractor's responsibility to submit shop drawings and technical data showing seals and systems proposed, and corresponding agency approval. The Contractor shall also be responsible to submit any data as required by local agencies to satisfy them that the Contractor's proposed fire seals are satisfactory.

C. Seals shall be watertight where the penetration may be exposed to water or moisture.

D. Duct penetrations through roof or exterior wall assemblies shall be provided with flashings for a weathertight assembly in accordance with SMACNA HVAC Duct Construction Standards. Such openings shall be sealed to be weatherproof.

END OF SECTION

SECTION 23 2300

REFRIGERANT PIPING SYSTEM

PART 1 - GENERAL

1.01 GENERAL

A. Includes, but not limited to, the furnishing and installation of piping for refrigeration systems. The general arrangement and location of piping is shown on the plans. The pipe sizing and exact arrangements shall be designed by this contractor. This contractor shall provide all labor, materials, equipment, refrigeration specialties, testing, evacuation, oil and refrigerant charging as required for a complete and operational system. The design and installation shall conform to the equipment manufacturer's recommendations and installation instructions and all local mechanical and environmental codes.

B. Single line indicated on plans designates the proposed routing for the refrigeration piping between the indoor and outdoor units. That single line represents all the required piping runs required for the system designed. Contractor to verify quantity of circuits, piping runs and sizing prior to bid and installation.

1.02 RELATED SECTIONS

A. General Conditions, Division 01

B. Section 20 0000 – General Mechanical Requirements

C. Section 22 1116 – Domestic Water Pipe and Fittings

D. Section 22 2000 – Excavation and Backfill For Mechanical Underground Utilities

E. Section 23 0529 – Hangers and Supports for HVAC Piping and Equipment

F. Section 23 0719 – HVAC Piping Insulation

G. Section 23 8145 – Variable Refrigerant Zone System

1.03 QUALITY ASSURANCE

A. Refrigerant piping shall be installed by a refrigeration contractor licensed in the State of Washington, having a minimum of five (5) years' experience in refrigeration piping installation, and certification of technical training specifically in refrigeration from an industry recognized training program. Proof of license, experience and training shall be submitted as part of the Mechanical Submittals, see Section 20 00 00. All technicians working on-site shall be certificated in the use and handling of refrigerants in accordance with federal EPA regulation 40 CFR Part 82, sub-paragraph F.

1.04 SUBMITTAL REQUIREMENTS OF THIS SECTION

A. Pipe

B. Fittings

C. Brazing Material

D. Accumulators (Separate from Equipment)

E. Expansion Valves (Separate from Equipment)

F. Isolation Valves

G. Filters/Driers

H. Shop Drawings and Calculations

I. Certified Installer Information

1.05 OPERATION AND MAINTENANCE REQUIREMENTS FOR THIS SECTION

A. Accumulators

B. Filters/Dryers

C. Valve Diagram

D. Shop Drawings and Calculations

PART 2 - PRODUCTS

2.01 APPROVED MANUFACTURERS

A. Not Applicable

2.02 REFRIGERANT PIPING

A. Meet the requirements of ASTM B 280-86, "Specification for Seamless Copper Tube for Air Conditioning and Refrigeration Field Service", ACR hard drawn straight lengths.

B. Use of pre-charged soft copper line sets is prohibited.

2.03 REFRIGERANT FITTINGS

A. General: 100% Wrot copper with long radius elbows

B. Approved Manufacturers: Mueller Streamline, Nibco

2.04 BRAZING MATERIAL

A. Brazing rods with a minimum of 5% silver content shall be utilized. Rods containing Cadmium will not be permitted.

2.05 ACCUMULATORS

A. Accumulators are typically furnished as an integral component of the refrigeration equipment however the capacity of the provided accumulator shall be verified in each installation. Should additional accumulators be required to support larger refrigerant charges due to long piping runs, they shall be sized, furnished and installed by this contractor. Include all calculations in submittal to Engineer.

2.06 EXPANSION VALVES

A. Expansion valves are typically furnished as an integral component of the refrigeration equipment however should the selection of equipment require field installation of the expansion valve, it shall be provided by this contractor. Expansion valves shall be selected as recommended by the manufacturer for the individual coil, tonnage, refrigerant and system pressures. Size valves to provide full rated coil capacity and indicated on the equipment schedules. Adjust final superheat temperature settings to those recommended by equipment manufacturer.

2.07 ISOLATION VALVES

A. Line size, ball type isolation valves shall be provided on both vapor and liquid lines of all systems. Provide one vapor and 2 liquid line valves (for filter/drier isolation) at the outdoor unit.

B. Valves shall be suitable for use with HCFC and HFC refrigerants, forged brass body, seal cap and wrot copper fitting extensions. Temperature rating shall be -40°F to +325°F minimum.

C. Coordinate optimum location of valves with filter/dryer unit (a valve on each side of the filter) to facilitate replacement with minimal loss of refrigerant. At minimum, provide one set of schrader valves located on the indoor coil side of the valves to facilitate evacuation and charging of the piping.

2.08 FILTER/DRIERS

A. All systems shall be provided with field installed, bi-directional, liquid line filter drier units. This filter shall be provided regardless of whether the unit is provided with one, sized to provide rated tonnage as indicated on the equipment schedule plus 50% while maintaining a 2 PSIG or less pressure drop. Provide filters with SAE flare type fitting for ease in replacement.

PART 3 - EXECUTION

3.01 SHOP DRAWINGS AND CALCULATIONS

A. Provide shop drawings of each system in the project. Drawings are to be at 1/8th inch per foot minimum, and in sufficient detail to count fittings and devices with all vertical and horizontal runs fully dimensioned. Show sizes of all piping and type of fittings. Provide large scale details of indoor and outdoor equipment connections with all devices located, chases through the building components, refrigerant traps, and underground piping runs.

B. Provide calculations that support the shop drawings with an individual pipe sizing calculation for each piping system. These calculations are to be performed by the equipment manufacturer's technical support personnel and submitted to the Engineer. These calculations shall provide total system capacity loss due to piping, system vapor velocities and critical system operating temperatures.

C. **All piping systems shall be sized as required to prevent no more than 5% system capacity loss due to piping.**

D. Each piping system is to be individually sized accounting for that particular unit's capacity, piping lengths, fittings and devices. Oil return is a major consideration and refrigerant vapor velocity must be sufficient to entrain oil. Minimum velocity must be 800 fpm in horizontal runs and 1500 fpm in vertical suction risers.

3.02 PIPING INSTALLATION

A. All vapor lines shall be sloped downward towards the compressor at a rate of one (1) inch per 10 lineal feet to facilitate oil return.

B. Provide oil traps at vertical risers where required to return oil to compressor and to prevent liquid migration back to the compressor in the off cycle.

C. Refrigeration system connections shall be copper-to-copper type properly cleaned and brazed. Use flux only where required for brazing brass components. Soft solder connections are prohibited. Only silver solder containing a minimum of 5% silver shall be utilized

D. Circulate dry nitrogen as a shield gas through piping while being brazed to eliminate formation of copper oxide during brazing operation.

E. All piping shall be secured using unistrut type channel with "Hydrosorb" type clamps. All clamps shall be specifically designed for use with refrigeration piping and shall contain internal plastic grommet for vibration and thermal isolation. The use of general-purpose clamps, conduit straps or plumbers' tape is strictly prohibited. Carefully plan routing and grouping of all piping to ensure a neat and professional installation.

F. Where necessary to offset piping around obstructions, utilize 45° elbows in lieu of 90° elbows to minimize pressure losses.

G. Where piping is installed underground, provide an utilidor or conduit type system in which all piping shall be routed and protected against physical damage and moisture. Refer to drawings for additional installation details.

H. A complete review of all installation recommendations produced by the equipment manufacturer is recommended prior to the installation of ACR piping. Conformance to all manufacturers' recommendations will be enforced.

I. All leak testing shall be performed and verified prior to covering any concealed or buried piping. See Field Leak Tests.

3.03 FIELD LEAK TESTS

A. All leak tests shall be witnessed and confirmed by the Engineer or Owner's representative. The purpose of all leak testing is to confirm the integrity of field installed piping. If equipment is provided with a factory provided refrigerant charge, the equipment may be isolated and excluded from the test. If shipped with only a "holding charge" or no charge, the isolation valves shall be opened, and the equipment shall be included in the pressure testing.

B. Following completion of the refrigeration piping systems, the following tests shall be performed.

1. Connect test gauge with minimum of "2% accuracy to the piping system to be tested and pressurize piping system with dry nitrogen gas to 1.25 x design service pressure (minimum of 250 psi) or as recommended by the equipment manufacturer. Do not introduce any refrigerant into the system prior to pressure testing. The test gauge shall remain connected throughout the test period. Record actual test gauge pressure, date, time and ambient temperature. System shall remain under test for a period of one week. At the conclusion of the test period, record pressure, date, time and ambient temperature. If the test gauge is within 1% (2.5 PSIG) of the original test pressure as witnessed by the Engineer, (plus adjustment fluctuations in ambient temperatures) the system will be "Passed" and approved for evacuation and charging procedures.

3.04 OIL/REFRIGERANT CHARGING

A. Prior to commencing oil and refrigerant charging procedures, this Contractor shall refer to and closely follow the manufacturers' specific procedures for charging the system. As a minimum, the following procedures shall be followed:

1. Calculate oil charge using manufacturer's recommended method and add oil to compressor crankcase as necessary for size of piping system. Affix permanent, weatherproof label to unit indicating date, type of oil, and amount added, signed by the technician performing the task.

2. Draw a vacuum on each entire system with vacuum pump to 200 microns using vacuum gauge calibrated in microns. Break vacuum with refrigerant shipped with unit and re-establish a 200-micron vacuum (double evacuation). Calculate recommended charge and add the appropriate refrigerant charge by weight using a digital scale. Check and adjust charge as necessary to obtain manufacturer's specified operating pressures and superheat during start-up procedure.

3.05 SYSTEM START-UP

A. Perform a system start-up and check-out procedure as recommended by the equipment manufacturer, and as indicated on the enclosed system Start-up and Check-out Log. This start-up and check-out shall be performed in the presence of the Engineer or Owner's representative.

B. Provide one week's written notice to the Engineer prior to start of equipment start-up and check-out.

C. Submit the following completed documentation including copies of the completed compressor warranty registration forms to the Engineer upon completion of system start-up.

3.06 START-UP LOG

(See attached.)

START-UP LOG

Date: _____ Project Title: _____

Contractor: _____ Tech. Name: _____

Refrigerant License #: _____

EQUIPMENT:

	Indoor	Outdoor	Accessories
Unit #:	_____	_____	_____
Make:	_____	_____	_____
Model:	_____	_____	_____
Serial#:	_____	_____	_____
Location:	_____	_____	_____

REFRIGERANT CHARGE: Type: _____ Amount: _____

OIL CHARGE: Type: _____ Amount: _____

TEMPERATURES:

Indoor: _____ Outdoor: _____

Return Air: _____ Supply Air: _____

COMPRESSOR(S):

	#1		#2	
		Cooling		Cooling
Discharge Pressure:		_____		_____
Suction Pressure:		_____		_____
	Actual	Rated	Actual	Rated
Amps:	_____	_____	_____	_____

Volts(at disconnect): L1 - L2 _____ L2 - L3 _____ L1 - L3 _____

INDOOR MOTOR:

Direct Drive: _____ Belt Drive: _____ Belt Size: _____

Amps-Actual: _____ Amps-Rated: _____ Volts:

Rotation Verified? Yes ( ) No ( )

OUTDOOR MOTOR:

Amps-Actual: _____ Amps-Rated: _____ Volts: _____

HEAT:

Electric: _____KW _____Volts

None: _____(check if no heat)

THERMOSTAT OPERATION:

Type: _____ Fan On During Occupied? Yes ( ) No ( )

Setpoints: Occupied Cool _____ Unoccupied Cool_____

FILTERS: Type: _____ Size: _____ Quantity: _____

COMMENTS: _____

_____

_____

_____

TECHNICIAN SIGNATURE: _____

END OF SECTION

SECTION 23 3113

STEEL DUCTWORK

PART 1 - GENERAL

1.01 GENERAL

A. Includes, but not limited to, furnishing and installing above-ground ductwork and related items specified below and shown on Drawings.

1.02 RELATED SECTIONS

A. General Conditions and Division 01 apply to this Section.

B. Section 20 0000 - General Mechanical Conditions

C. Section 23 0529 - Hangers and Supports for HVAC Piping & Equipment

D. Section 23 0713 - Equipment/Ductwork Insulation

E. Section 23 3300 - HVAC Specialties

1.03 SUBMITTAL REQUIREMENTS OF THIS SECTION

A. Duct liner

B. Acoustic duct

C. Access doors

D. Volume dampers

E. Motorized dampers

F. Duct Silencers

G. Duct Sealers

H. Duct Closure Collars

I. Turning vanes

1.04 OPERATION AND MAINTENANCE REQUIREMENTS OF THIS SECTION

A. Motorized dampers

B. Grease duct test report

1.05 DEFINITIONS

A. Duct Sizes: All duct dimensions shown are inside clear dimensions. Where inside duct lining is specified or indicated, duct dimensions are to the inside face of lining.

B. Low Pressure System: Velocities less than 1,500 fpm and static pressure in duct 2 inches w.g. or less.

C. Medium Pressure System: Velocities less than 2,500 fpm or static pressure in duct up through 6 inches w.g.

D. High Pressure System: Velocities greater than 2,500 fpm or static pressure in duct over 6 inches w.g.

E. Primary Duct System: See Section 23 0713-Equipment/Ductwork Insulation.

F. Gauges: Steel sheet and wire are U.S. Standard Gauge; aluminum sheet is Brown and Sharpe Gauge.

PART 2 - PRODUCTS

2.01 APPROVED MANUFACTURERS

A. Not Applicable

2.02 DUCTS

A. Fabricate and support in accordance with SMACNA HVAC Duct Construction Standards - Metal, except as indicated. Fabricate of zinc-coated lock-forming quality steel sheets meeting requirements of ASTM A 527-85, "Specification for Sheet Steel Zinc Coated (Galvanized) by the Hot-Dip Process, Lock Forming Quality", with G 60 coating.

B. Construct T's, bends, and elbows with radius of 1-1/2 times width of duct on centerline. Where not possible, provide turning vanes.

C. Increase duct sizes gradually, not exceeding 30° divergence and 45° convergence.

D. Use crimp joints with or without bead for joining round duct sizes 8 inches (200 mm) and smaller with crimp in direction of airflow.

E. Kitchen Hood Exhaust Ductwork: Fabricate in accordance with NFPA 96.

F. Fume hood exhaust ductwork shall conform to the IMC, Chapter 5.

2.03 DUCT JOINTS

A. General: Duct with sides or diameter up to and including 36 inches shall be as scheduled below.

Max. Side Inches	Required Minimum Metal Gauges Steel, U.S. Standard Gauge	Type of Transverse Joint Connections	Bracing Required
Under 13"	26	S-drive, pocket or bar slips on 7 - 10" centers	None
13" to 24"	24	S-drive, pocket or bar slips on 7-10" centers	None
25" to 30"	24	S-drive, 1" pocket or 1" bar slips on 7'-10" centers	1"x1"x1/8" angles 4' from joints
31" to 36"	22	Drive 1"pocket or 1"bar slips on 7'-10" centers	1"x1"x1/8" angles 4' from joints

B. Ducts with sides over 36 inches to 48 inches, transverse duct joint system by Ductmate/25, Nexus, or WDCI (Lite) (SMACNA "E" or "G" Type connection).

C. Ducts 48 inches and larger, Ductmates/35, Nexus, or WDCI (Heavy) (SMACNA "J" Type connection).

D. Proprietary duct connections may be used on other sizes, Ductmate, WDCI, or equal.

2.04 ROUND DUCT

A. Fabricate of zinc-coated lock-forming quality steel sheets meeting requirements of ASTM A 527-85, "Specification for Sheet Steel Zinc Coated (Galvanized) by the Hot-Dip Process, Lock Forming Quality", with G 60 coating.

B. Gauge Selection Table:

Duct Diameter in Inches	Maximum 2" w.g. Static Positive		Maximum 2" w.g. Static Negative	
	Spiral Seam Gauge	Longitudinal Seam Gauge	Spiral Seam Gauge	Longitudinal Seam Gauge
3 thru 8	28	28	28	24
9 thru 14	28	26	26	24
15 thru 26	26	24	24	22
27 thru 36	24	22	22	20
37 thru 50	22	20	20	18
51 thru 60	20	18	18	16
61 thru 84	18	16	16	14

C. Provide insulation where required by the Insulation Schedule in Section 23 0713 - Equipment/Ductwork Insulation.

2.05 SPIRAL DUCT

A. The outer pressure sheet shall be manufactured from galvanized steel meeting ASTM A-527-67 in the following minimum gauges:

Nominal Size Range	Solid Spiral Wound Duct Outer Pressure Shell	Solid Welded Fitting Outer Pressure Shell
3"-12"	26 Ga.	20 Ga.
13"-24"	24 Ga.	20 Ga.
25"-34"	22 Ga.	20 Ga.
35"-48"	20 Ga.	18 Ga.
50"-58"	18 Ga.	16 Ga.

2.06 QUICK FIT DUCTING

A. Ductwork shall be of a clamp-together design using a die-formed, rolled edge, which is then joined together by a single lever clamp of similar material. All clamp together ducting shall be of continuous laser welded construction along the longitudinal seam of the rolled form duct. All connections shall have (PVC seal in clamp, for standard installation) (Gortex seal for mist or food grade applications).

1. Duct material sheet blanks are five feet long, which is then rolled and fused together with a laser weld process along the longitudinal seam.

2. The ends of the duct are then pressed in a die to form a rolled bead on each end of the duct. This rolled end is used for clamping components together as well as reinforcement every 5 feet.

3. An 11" long ‘slip-joint’ of the same construction is used when a run less than 5' is required. To create the desired span, the rolled bead is cut off one end of a 5' section of pipe, 6" shorter than the required overall span. The cut pipe shall slip inside the ‘slip-joint’ which shall have a slightly larger ID and a rubber O-ring is used to makeup the bead on the cut pipe for clamping the assembly together.

B. Component Material:

1. Straight duct and other connecting components to be constructed of galvanized sheets produced by the continuous galvanizing process, which conforms to ASTM-A-527, and commercial quality ASTM A-527. (Ducting constructed of stainless steel to be 304 2B finish (2B finish is annealed, pickled and bright code rolled). (Galvanized ducting from diameters 3" – 6" shall be 24 Ga., 7" – 12" 22 Ga., and 14" – 22" 20 Ga.)

C. Approved Manufacturers:

1. Nordfab Co.

2.07 STAINLESS STEEL DUCT

A. Stainless steel duct and fittings shall be Type 304 stainless steel. The duct shall be constructed with the following gauges:

Duct Diameter or Longest Dimension (Inches)	U.S. Standard Gauge	Thickness (Inches)
Up to 11’’	22*	0.0313
12"-15"	20*	0.0375
16" and greater	18	0.0500

* Note: All welded duct shall be minimum 18 gauge.

1. Provide stainless steel duct where indicated on the plans and in the following areas:

a. Fume Hood:

1) The exhaust duct to fume hoods shall be stainless steel duct. If duct is under a positive pressure (i.e., hood with inline fan), duct shall be welded.

2) If welded duct is required, all joints shall be welded. Cross joints shall be slip type with 1” – inside lap in the direction of airflow.

3) Support duct runs on minimum 8-foot centers. Supports shall be ban type as shown in SMACNA HVAC Duct Construction Standards. See Section 15095 – Hangers and Supports, for allowable hanger loads and type.

4) Fittings: Shall be constructed of material at least 2-gauges heavier than required for straight duct. Elbows shall have a minimum centerline radius of two duct diameters. Construct elbows 6” diameter or less of at least five sections; all other ducts hall have seven or more sections. Transitions shall be tapered to provide minimum 2” change in diameter in five inches of length (11.3 degrees). All branches shall enter the main at the large end of the transition of an angle not to exceed 45 degrees.

b. Type 1 Hoods (Ductwork): Ductwork shall be constructed of minimum 16-gauge stainless steel with all seams and joints having a liquid-tight continuous exterior weld, and complying with IMC and NFPA standards. Where duct runs horizontal, cleanouts must be provided.

c. Dishwasher Hoods Ductwork: Ductwork shall be welded stainless steel, conforming to SMACNA HVAC Duct Construction Standards.

2.08 DUCT LINER

A. Densities and R-value:

1. R-3.3: 1.0 inch of 1.5 to 3.0 lb/cu. Ft. duct liner

2. R-5.3: 1.5 inches of 1.5 to 3.0 lb/cu. Ft. duct liner

3. R-7: 2.0 inches of 1.5 to 3.0 lb/cu. Ft. duct liner

B. Duct Liner:

1. 'K' ('ksi') Value: ASTM C518, 0.25 at 75°F (0.036 at 24°C)

2. Noise Reduction Coefficient: 0.65 or higher based on "Type A mounting"

3. Maximum Velocity on Mat or Coated Air Side: 5,000 ft/min (25.4 m/sec)

4. Adhesive: UL listed waterproof type

5. Fasteners: Duct liner galvanized steel pins, welded or mechanically fastened

6. Approved Manufacturers:

a. Manville Permacote Linacoustic (HP)

C. Spiral Duct Liner:

1. For ductwork requiring 1-inch (25 mm) Spiracoustic Plus System Lining:

a. The installed 1-inch lining shall have a Thermal Resistance (R-Value) of 4.3 (.76) at 75°F (24°C) mean temperature, and Noise Reduction Coefficients (NRC) per ASTM C 423, Type "A" mounting.

b. Metal duct with inside diameters from 8 inches to 18 inches (203 to 457 mm) shall be lined with 1-inch Preformed Round Liner.

1) Approved Manufacturers:

a) Permacote Spiracoustic Liner

c. Metal duct with inside diameters from 18 inches to 32 inches (457 to 813 mm) shall be lined with 1-inch Round Liner Board.

1) Approved Manufacturers

a) Spiracoustic Plus “SD” Liner

d. Metal duct with inside diameters greater than or equal to 34 inches (364 mm) shall be lined with 1-inch Round Liner Board.

1) Approved Manufacturers

a) Spiracoustic Plus “LD” Liner

2. For ductwork requiring 1 1/2-inch (38 mm) Lining:

a. The installed 1 1/2-inch lining shall have a Thermal Resistance (R-Value) of 6.3 (1.11) at 75°F (24°C) mean temperature, and a Noise Reduction Coefficient (NRC) of 0.95 per ASTM C 423, Type "A" mounting.

b. Metal duct with inside diameters from 9 inches to 18 inches (229 to 457 mm) shall be lined with 1 1/2-inch Preformed Round Liner.

1) Approved Manufacturers:

a) Permacote Spiracoustic Liner

c. Metal duct with inside diameters from 22 inches to 38 inches (559 to 965 mm), shall be lined with 1 1/2-inch Round Liner Board.

1) Approved Manufacturers:

a) Spiracoustic Plus “SD” Liner

d. Metal duct with inside diameters greater than or equal to 40 inches (1.02 m), shall be lined with 1 1/2-inch Spiracoustic Plus LD Round Liner Board.

D. Fiber Free Duct Liner (Rectangular/Spiral):

1. Liner shall be fiber-free, closed cell type.

2. Provide with factory applied pressure sensitive adhesive.

3. Shall meet the requirements of NFPA 90A and 90B for Duct Coverings and Linings, and UL 181 for Mold Growth.

4. Liner shall be rated to withstand temperature up to 250°F.

5. Liner shall meet the requirements of the International Energy Conservation Code (IECC) and ASHRAE for R-Value 4.2 at 1” thickness.

6. Approved Manufacturers:

a. Armacell

b. K-Flex Duct Products

2.09 ACOUSTIC DUCT

A. Provide internally insulated, sound control duct and fittings to be acousti-k27 (perforated liner) Type K (solid liner).

1. Outer pressure shell per spiral duct above.

2. The spiral wound inner liner duct (perforated or solid) is made from 28-gauge galvanized steel and is ribbed for diameters from 9 through 58 inches.

3. The inner liner of the fitting is made from 26-gauge galvanized steel for fittings 3 through 28 inches in diameter, 24 gauge for fittings 29 through 40 inches in diameter, and 22 gauge for fittings 42 through 58 inches in diameter.

4. The construction is to give specific acoustic impedance to conform to the noise reduction characteristics published by United Sheet Metal. The construction is to provide a thermal conductivity "K" factor of .27 BTU/hr./Sq.ft./in. deg. F. at 75 deg. mean temperature. The products shall conform to published performance test data for energy loss of duct and fittings. The construction shall have mechanical means to maintain positive concentricity of liner with shell and mechanical means to retain insulation against dislocation by assembly processes. Adhesives of any type are not permitted in construction unless the Flame Spread, Smoke Developed and Sound Attenuation tests were performed with the adhesives as used.

5. Where indicated on drawings or Part 3 of the specifications, provide duct and fittings with construction to provide 100% mechanical separation and air stream. Construction to provide protection against any possibility of fiber entrainment.

    a. Joints 0"-20" diameter, interior slip coupling beaded at center, fastened to duct with sealing compound applied continuously around joint before assembling and after fastening. Wrap joints with 3-inch-wide duct tape.

    b. Joints 21"-72" diameter, use 3 piece, gasketed, flanged joints consisting of 2 internal flanges (with integral mastic sealant) split to accommodate minor differences in duct diameter, and one external closure bank designed to compress gasketing between internal flanges. Example: Ductmate Spiralmate or equal.

6. Approved Manufacturer:

    a. McGill AirFlow

2.10 ACCESS DOORS IN DUCTS

A. At each backdraft damper and at each motorized damper, install factory built 1" insulated access door with hinges and sash locks. Locate doors within 6 inches of installed dampers. Construction shall be galvanized sheet metal, 22 ga. minimum frame and 24 ga. minimum door. Minimum door shall be 12x12. If duct is too small for 12" door, then maximum door size shall be installed in duct.

B. Access doors for fire damper shall have a minimum clear opening of 12"x12" or as specified on Drawings to easily service fire damper. Doors shall be within 6 inches of fire dampers.

C. Approved Manufacturers:

1. Nailor - Hart Industries Inc.

2. Cesco - Advanced Air

3. AirBalance Fire/Seal

4. Louvers & Dampers

5. Kees Inc.

6. Ductmate Industries Inc "Sandwich" Access Door

7. National Controlled Air Inc.

8. Greenheck

9. Elmdor

2.11 FLEXIBLE EQUIPMENT CONNECTIONS

A. Provide flexible equipment connections between ductwork and equipment. See Section 23 3300 - HVAC Specialties.

2.12 VOLUME DAMPERS

A. Fabricate in accordance with SMACNA HVAC Duct Construction Standards - Metal and Flexible, and as indicated.

B. Fabricate splitter dampers of same material and gage as duct to 24 inches (600 mm) size in either direction, and two gages heavier for larger sizes, secured with continuous hinge or rod, operated with minimum 1/4-inch (6 mm) diameter rod.

C. Fabricate single blade dampers for duct sizes to 9-1/2 x 30 inch (240 x 760 mm).

D. Fabricate multi-blade damper of opposed blade pattern with maximum blade sizes 12 x 72 inch (300 x 825 mm). Assemble center and edge crimped blades in prime coated or galvanized channel frame with suitable hardware.

E. Except in round ductwork 12 inches (300 mm) in diameter and smaller, provide end bearings.

F. Provide locking, indicating quadrant regulators on single and multi-blade dampers. Where width exceeds 30 inches (750 mm), provide regulator at both ends.

2.13 MOTORIZED DAMPERS

A. General:

1. Coordinate actuator type with Controls Contractor.

2. Damper actuators and actuator linkages shall be mounted in the airstream for all rooftop fans/roof hoods and mounted external of the airflow at all other locations, unless specifically indicated otherwise on plans.

3. Multi section damper assemblies shall be provided with a factory installed common jackshaft.

4. Provide with double flange duct connection.

5. Shall be Class IA leakage rated.

6. Provide parallel blade airfoil type for open/closed control and opposed blade airfoil type for modulating/throttling control.

B. Damper Blades:

1. Extruded aluminum or galvanized steel air foils with replaceable rubber blade seals, 6-inches wide maximum.

2. 304 stainless steel when installed in dishwasher hood ductwork.

3. Jamb seals shall be flexible metal compression type.

C. Performance:

1. Maximum leakage rate shall be 3 cfm/sq. ft. of damper area per 1.0-inch w.g. in accordance with AMCA Standard 500D.

2. Maximum pressure drop for a 12”x12” damper shall be 0.08” w.g. at 1,000 fpm face velocity.

D. Approved Manufacturers:

1. Ruskin (CD50/CD60)

2. Greenheck (VCD-33/VCD-43)

2.14 DUCT HANGERS

A. See Section 23 0529 - Hangers and Supports for HVAC Piping & Equipment.

2.15 DUCT SILENCERS

A. Equal to:

1. AIRSAN by Air Filter Corp

2. Commercial Acoustics

2.16 DUCT SEALANT AND ADHESIVES

A. Duct Sealant technical makeup shall be water based, solvent-free and of the synthetic latex family. Sealants shall be UL 181 Listed, meet all SMACNA pressure and seal classes and be rated to ± 15 inches water gauge. Sealants shall have flame spread of 0 and smoke development of 0 when tested in accordance to ASTM E-84. They shall be formulated to withstand working temperatures of -25°F to +200°F. All sealants shall exceed 500 hours under ASTM C-732 (Artificial Weathering) and pass ASTM C-734 (Low Temperature Flexibility after Artificial Weathering). All sealants shall be of an elastomeric nature, have a minimum weight of 12 pounds and a minimum solids content by weight of 66% ± 2%. Sealants shall be resistant to cracking, peeling, mold and mildew. Sealants shall also have excellent water and UV resistance. Sealants shall meet FDA, USDA and EPA standards as well as meet NFPA 90A and 90B requirements. Sealant shall be Design Polymerics DP 1010 or DP 1020 duct sealant or equal.

B. Solvent based duct sealant VOC shall be less than or equal to 50 g/l and be UL 723 Classified with a flame spread of 0 and a smoke development of 0. Sealant shall have passed 1000 hours of QUV accelerated outdoor aging testing. Sealant shall be Design Polymerics DP 1090 duct sealant or equal.

1. All traverse joints, longitudinal seams and penetrations in duct systems shall be sealed with duct sealant of the type specified. Spiral lockseams are not longitudinal seams and do not require duct sealant. All sealant shall be applied per the manufactures' recommendations. Joints that are not fully welded shall be sealed. For spiral and flat oval duct slip connections; coat both the female and male ends. The slip connections should then be brushed over with an additional coat 2 to 3 inches wide 20 to 40 mils thick.

2. All conditioned air supply ducts, return ducts and fresh air intakes shall have all joints and seams sealed or welded, except spiral seams round and flat oval ducts, which are exempt.

3. Seal sealants and joint sealants shall not be used as a substitute for good workmanship. No ductwork will be covered or installed until inspected and pressure tested if necessary.

C. Gaskets for TDC, TDF and applied flange connections shall meet all SMACNA pressure and seal classes. The gasket shall meet UL 723, ASTME E-84, NFPA 90A and 90B requirements as well as FDA, USDA and EPA standards. The tape shall be 5/8 inches by 3/16 inches and applied according to the manufactures' directions. Expanded or extruded foam gaskets are not acceptable. Gasket shall be Design Polymerics DP 1040 Butyl Gasket Tape or equal.

D. Exterior Ductwork: Sealant shall be Design Polymerics DP 1090, or equal.

2.17 DUCT CLOSURE COLLARS

A. General: Closure collars shall provide closure of opening between duct and opening in element penetrated and shall abut tight up to and overlap duct and shall consist of rolled angle material (for round ducts) and welded framed angles (for rectangular/round ducts).

B. Size: Closure collars shall be sized to match duct/opening applied to and shall have minimum 2-inch overlap on duct side and 2-inch overlap at opening/ penetrated element side but shall completely cover opening in element penetrated with minimum 1-inch overlap to undisturbed element (i.e., wall, floor, etc.).

C. Material: Closure collars shall be fabricated of 20-gauge galvanized steel for ducts 15 inches diameter and less and shall be fabricated of 18-gauge galvanized steel duct for all larger ducts and all square and rectangular ducts.

2.18 TURNING VANES

A. Turning vanes may be either Contractor or factory fabricated. Factory fabricated vanes shall be Barber Colman "Airturns" or approved.

B. Vanes and runners shall be fabricated of minimum 24 gauge galvanized.

C. Turning vanes shall comply with SMACNA HVAC Duct Construction Standards. For duct widths less than 19 inches, vanes may be single wall construction; for widths greater than 19 inches, vanes shall be double wall "airfoil" type.

D. Turning vanes shall be equally spaced, parallel to each other, and securely attached to runners.

E. For elbows where the inlet and outlet dimensions are not the same, modify vane shape or angle to provide optimum turning.

PART 3 - EXECUTION

3.01 INSTALLATION

A. Ducts:

1. Straight and smooth on inside with joints neatly finished unless otherwise directed.

2. Duct panels through 48-inch dimension having acoustic duct liner need not be crossbroken or beaded.

3. Crossbreak unlined ducts and duct panels larger than 48 inch or bead 12 inches on center.

4. Securely anchor ducts to building structure with screws.

5. Brace and install ducts so they shall be free of vibration under all conditions of operation.

6. Round, horizontal ducts shall be hung with bands, which extend the entire perimeter of the duct.

7. Ducts shall be braced and guyed to prevent lateral or horizontal swing.

8. Ducts shall not bear on top of structural members.

9. Make duct take-offs to branches, registers, grilles, and diffusers as detailed on Drawings.

10. Ducts shall be large enough to accommodate inside duct liner. Dimension shown on Drawings are net clear inside dimensions after duct liner has been installed.

11. Properly flash where ducts protrude above roof.

12. Install internal ends of slip joints in direction of flow. Make joints airtight using specified duct sealer.

13. Cover horizontal and longitudinal joints on exterior ducts two layers of Hardcast tape installed with Hardcast HC-20 adhesive according to Manufacturer's recommendations.

14. Ducts installed on mechanical space floor or walkway where ducts may be subject to abuse shall have Ductmate/35 or (heavy) SMACNA "J" type connection on all joints.

15. Contractor shall obtain a signed statement from kitchen Contractor verifying ceiling height and hood configuration prior to hood ductwork fabrication.

16. Provide acoustic duct for first 15 feet downstream of all air handling unit supply and return ducts.

17. All exposed ducts shall be spiral.

18. Quick fit duct shall be used where called out on the plans or as called out in specialty exhaust specifications (i.e., 23 3513 Sawdust Collection System).

19. Provide duct transitions to equipment openings.

B. Duct Liner:

1. Adhere insulation to sheet metal with full coverage of a UL listed adhesive.

2. Secure insulation with mechanical liner fasteners as indicated by SMACNA or manufacturer. Pin length should be as recommended by the liner manufacturer.

3. All exposed edges of the fibrous type liner must be factory or field coated. For systems operating at 4000 fpm or higher, a metal nosing must be installed in all liner leading edges.

4. Repair fibrous type liner surface penetrations with UL listed adhesive.

5. Duct dimensions indicated are net inside dimensions required for air flow. Increase duct size to allow for insulation thickness.

6. Provide duct liner for all return air ducts unless specifically excluded in Section 23 0713.

7. Provide acoustic duct liner for duct indicated on plan and Section 23 0713.

8. Provide liner for all supply duct unless specifically excluded from Section 23 0713.

9. Provide ductliner for first 10' in and out of all exhaust fans (excluding dishwasher, kitchen fume, and particulate fans).

C. Turning Vanes:

1. Install turning vanes in all square duct turns, and at locations shown on drawings.

2. Securely attach turning vane runners to ductwork.

D. Flexible Connections: See Section 23 3300 - HVAC Specialties.

E. Balancing Dampers:

1. Provide each take-off with an adjustable volume damper to balance that branch.

2. Anchor dampers securely to duct.

3. Install dampers in main ducts within insulation.

4. Dampers in branch ducts shall fit against sheet metal walls, bottom and top of duct, and be securely fastened. Cut duct liner to allow damper to fit against sheet metal.

F. Motorized Dampers:

1. Motorized dampers shall be installed in all outside air intakes, exhaust outlets, and relief outlets per WSEC and as shown on drawings.

G. Grilles, Registers, and Diffusers: Install and anchor securely.

H. Adjustable Lock Splitter Dampers:

1. Dampers in equipment rooms shall be complete with locking quadrant.

2. Other dampers shall have concealed ceiling damper regulator with plate.

I. Painting of Ductwork: Paint ductwork visible through registers, grilles, and diffusers flat black.

J. Ductwork Leakage Criteria:

1. All transverse joints and longitudinal seams shall conform to SMACNA's Class A sealing requirements as defined on page 1-6 of the 1985 SMACNA Manual, First Edition.

2. Constant Volume Systems/Supply Ductwork:

a. Allowable Leakage – per SMACNA

3. Constant Volume Systems/Return Ductwork:

a. Return Ductwork – per SMACNA

4. Variable Air Volume Systems/Supply Ductwork:

a. Fan to VAV Boxes -- 1% of design cfm

b. VAV Boxes to Registers -- 2% of design cfm

5. Variable Air Volume Systems/Return Ductwork:

a. Return Ductwork -- 2% of design cfm

K. Ductwork Leakage Testing:

1. Duct leakage testing is required for all duct systems constructed to a pressure class of 3” water column or greater per the 2015 Washington State Energy Code, Section C403.2.8.3.3.

2. Installed ductwork shall be tested prior to installation of access doors, take-offs, insulation, etc.

3. All leak testing shall be witnessed by the Engineer or representative of the Engineer. The Contractor shall give the Engineer 72 hours notice prior to testing. Any testing not witnessed by the Engineer or his/her representative, shall be considered invalid and will be redone.

4. Ductwork shall be tested in accordance with the requirements outlined in the SMACNA HVAC Air Duct Leakage Test Manual and shown to have a (CL) less than or equal to 4.0.

5. Duct leakage, in excess of SMACNA HVAC Air Duct Leakage Manual, shall be repaired and have the test re-performed until the leakage rate is within acceptable levels.

6. Submit leakage test report identifying on a plan all the ducts tested and tested leakage rate.

L. Duct Cleanliness Criteria: Unless otherwise specified, the delivery, storage, and installation of all un-lined ductwork shall comply with the intermediate duct cleanliness level of SMACNA Duct Cleanliness for New Construction Guidelines. All lined and acoustic duct shall comply with the advanced level.

M. Grease Duct Test:

1. The Contractor shall perform a light test by passing a lamp having a power rating of not less than 100 watts through the entire section of ductwork to be tested. The lamp shall be open so as to emit light equally in all directions perpendicular to the duct walls. A test shall be performed for the entire duct system, including the hood-to-duct connection. The duct work shall be permitted to be tested in sections, provided that every joint is tested.

2. If any light can be seen, the joint will be repaired and retested.

3. Coordinate testing with the Building Inspector and provide a findings report for inclusion in the Operations & Maintenance Manual.

END OF SECTION

SECTION 23 3300

HVAC SPECIALTIES

PART 1 - GENERAL

1.01 SUMMARY

A. Includes, but not limited to, furnishing and installing specified material as described in Contract Documents.

B. Filters used in air handling units and heat pumps.

C. Flexible ductwork from supply air branch duct runouts to diffusers where indicated on drawings.

D. Furnishing and installing fire dampers, ceiling radiation, and fire/smoke dampers at penetrations of fire rated walls, floors, and ceiling membranes, at ducts, registers, grilles, or louvers as indicated on drawings. Installation shall be complete with sleeves, angles, and all other accessories as required by UL installation instructions, local codes, and reviewing authorities.

E. Section Includes:

1. Hood exhaust specialties
2. Backdraft dampers
3. Filters and filter housing
4. Flexible duct
5. Flexible equipment connections
6. Fire and fire/smoke dampers
7. Field applied grease duct enclosure

1.02 RELATED SECTIONS

A. General Conditions

B. Division 01

C. Section 20 0000 - General Mechanical Requirements

D. Section 23 3113 - Steel Ductwork

E. Section 15900 - Fiberglass Ductwork (Optional)

1.03 SUBMITTAL REQUIREMENTS OF THIS SECTION

A. Backdraft dampers

B. Filters

C. Filter housing

D. Air filter gauge

E. Flexible ductwork

F. Flexible equipment connections

G. Fire and/or smoke dampers

H. Fire barrier duct wrap

I. Fire barrier grease duct access doors

J. Airflow station

K. Duct smoke detectors

L. Hoods

M. Fabric Duct

1.04 OPERATION AND MAINTENANCE REQUIREMENTS OF THIS SECTION

A. Backdraft dampers

B. Filters (Summarized list including equipment tag and size and quantity of filter per unit.)

1. Provide dates or projected dates of extra filter replacement.

C. Air Filter gauge pressure drop

D. Fire and/or smoke dampers

E. Airflow station maintenance and calibration

F. Duct smoke detectors

G. Hoods

1.05 QUALITY ASSURANCES

A. Requirements of Regulatory Agencies:

1. Bear the AMCA seal and UL label, NSF approved.

2. Fire and fire/smoke dampers to conform to UL Standards 555, 5558, and 555C and NFPA requirements as required and bear the correct UL label for the damper's application.

3. Fire and fire/smoke dampers shall be approved by State Fire Authorities where so required.

4. Fabric duct shall be UL listed in accordance with the 25/50 flame spread/smoke developed requirements of NFPA-90-A.

1.06 SPARE PARTS

A. Deliver with O&M Manuals six fusible links of each type used on the project where replaceable link-type dampers are furnished.

PART 2 - PRODUCTS

2.01 APPROVED MANUFACTURERS

A. Not Applicable

2.02 BACKDRAFT DAMPERS (COUNTER BALANCED)

A. General: 0.125 inches extruded aluminum frame, 0.07 inches aluminum blades with extruded vinyl edges, synthetic bearings, counterbalance, adjustable zinc plated bar on blades.

B. Backdraft dampers are to be factory set to open at 0.01" w.c. of building pressure and shall have a maximum static pressure drop of 0.05" w.c. at 700 fpm per AMCA Standard 500. Backdraft dampers shall have a leakage rate at no more than 20 CFM/sq. ft. at 1" w.c. of static pressure with a dimension of 24" or greater and 40 CFM/sq. ft. at 1” w.c. of static pressure with dimension smaller than 24” per AMCA Standard 500D.

C. Approved Manufacturer:

1. Ruskin

2. Greenheck

2.03 FILTERS

A. 2" MERV 8:

1. General: 30% efficient filters as specified herein shall be medium efficiency, pleated panel type, disposable filters; Farr 30/30 or approved and shall have an average efficiency of 25-30% atmospheric and 90-92% arrestance by ASHRAE Standard 52-76 unless instructed otherwise.

2. Filter Housings: Shall be sized to fit furnished unit or duct to be installed in and provide minimum filter sizes to obtain a maximum filter velocity of 300 fpm.

3. Resistance: Initial resistance of a 24"x24"x2" filter handling 2000 CFM shall not exceed 0.31" w.g.

4. Duct Holding Capacity: Shall be no less than 60 grams per square foot of face area at 1.0" w.g.

5. Size: Filters shall be 2" deep (unless indicated otherwise), with number and sizes indicated, or as required to give minimum nominal face area as scheduled on drawings.

6. Provide a filter pull strap for all multiple filter sets longer than 24 inches.

7. Approved Manufacturers:

   a. Farr Co.

   b. Airguard

   c. Purolator

   d. Eco-Air

B. 2" or 4" MERV 13 Low Static:

1. General: 80% efficient filters as specified herein shall be high efficiency, pleated panel type, disposable filters; Filtration Group MERV 13 Green Pleat or approved and shall have a Minimum Efficiency Reporting Value of MERV 13 when evaluated under the guidelines of ASHRAE Standard 52.2 2007.

2. Filter Housings: Shall be sized to fit furnished unit or duct to be installed in and provide minimum filter sizes to obtain a maximum filter velocity of 300 fpm.

3. Resistance: Initial resistance of a 24"x24"x2" filter handling 500 fpm shall not exceed 0.38" w.g. and 24"x24"x4" shall not exceed 0.23" w.g.

4. Duct Holding Capacity: Shall be no less than 60 grams per square foot of face area at 1.0" w.g.

5. Size: Filters shall be 2" deep (unless indicated otherwise), with number and sizes indicated, or as required to give minimum nominal face area as scheduled on drawings.

6. Provide a filter pull strap for all multiple filter sets longer than 24 inches.

7. Approved Manufacturers:

   a. Filtration Group

C. 2" or 4" MERV 13:

1. General: 80% efficient filters as specified herein shall be high efficiency, pleated panel type, disposable filters and shall have a Minimum Efficiency Reporting Value of MERV 13 when evaluated under the guidelines of current ASHRAE Standard 52.2.

2. Filter Housings: Shall be sized to fit furnished unit or duct to be installed in and provide minimum filter sizes to obtain a maximum filter velocity of 300 fpm.

3. Resistance: Initial resistance of a 24"x24"x2" filter handling 500 CFM shall not exceed 0.41" w.g. and 24"x24"x4" shall not exceed 0.35" w.g.

4. Duct Holding Capacity: Shall be no less than 60 grams per square foot of face area at 1.0" w.g.

5. Size: Filters shall be 2" deep (unless indicated otherwise), with number and sizes indicated, or as required to give minimum nominal face area as scheduled on drawings.

6. Provide a filter pull strap for all multiple filter sets longer than 24 inches.

7. Approved Manufacturers:

   a. Farr

   b. Airguard

   c. Purolator

   d. Eco-Air

D. HEPA:

1. Air filters shall be absolute grade HEPA filters consisting of pleated media packs assembled in a V-bank configuration, polyurethane sealant, anodized aluminum enclosure and seamless sealing gasket.

2. Construction:

a. Filter media shall be micro fiber glass formed into minipleat pleat-in-pleat V-bank design.

b. The media packs shall be potted into the enclosing frame with fire retardant polyurethane sealant.

c. An enclosing frame of anodized extruded aluminum shall form a rugged and durable enclosure.

d. A seamless sealing gasket shall be included on the downstream side of the filter to form a positive seal upon installation.

3. Performance:

a. Filter efficiency at 0.3 micron shall be 99.99% when evaluated according to the IEST Recommended Practice for applicable type. Each filter shall be labeled as to tested performance.

b. Initial resistance target shall not exceed 1.0" w.g. at 600 fpm.

c. Filter must be listed as UL 586 and UL 900 Class 2 per Underwriters Laboratories.

d. Manufacturer shall provide evidence of facility certification to ISO 9001:2000.

e. Approved Manufacturers:

1) Farr Company

2) Air Guard

3) Purolator

2.04 FILTER HOUSINGS - FAN COIL UNITS

A. Shall be fabricated and furnished as part of the fan coil units.

2.05 FILTER HOUSINGS - DUCT MOUNTED

A. Filter housings shall be factory or Contractor fabricated of not less than 20-gauge galvanized steel.

B. Housing shall have access doors on two sides, constructed of minimum 20-gauge galvanized steel and shall be hinged type with minimum of two heavy-duty latches (Ventlock or equal) and have neoprene sponge gasketing.

C. Holding frames shall be constructed of minimum 20-gauge galvanized steel, with U-type bearing channels, polyurethane gasketing on surfaces adjacent to filters.

2.06 TEMPORARY AIR INLET FILTERS

A. Type: Glass fiber or synthetic material blanket type filter media. Inlets and outlets shall be MERV 8 and unit shall be same as final.

B. Capacity: Shall have an average arrestance no less than 64%; dust holding capacity of 172 grams.

C. Size: Minimum 1" thick cut to size as required to cover inlets.

2.07 AIR FILTER GAUGE

A. An air filter gauge for measuring the resistance to air flow through the filters. The gauge shall be diaphragm actuated, shall have 3-7/8" diameter white dial with black figures and graduations, shall have pointer zero adjustment and shall be furnished complete with two static pressure tips, fittings for 1/4" metal tubing and means for mounting the gauge.

B. Gauge shall be Dwyer No. 2001-ASF reading to 3 times nominal operating pressure.

2.08 FLEXIBLE DUCTWORK

A. Formable, flexible, circular duct shall have a fiberglass scrim (or equivalent) and retain its cross-section, shape, rigidity, and shall not restrict air flow after bending.

B. Normal 1-1/2 inches thick, 3/4 lb./cu ft density fiberglass insulation with airtight, see-through polyethylene or polyester core, sheathed in seamless vapor barrier jacket factory installed over flexible assembly.

C. Assembly including insulation and vapor barrier, shall meet Class 1 requirements of NFPA 90A and be UL 181 rated, with flame spread of 25 or less and smoke developed rating of 50 or under.

D. Approved Manufacturers:

1. Wiremold

2. Flexible Air Movers Inc.

3. J.P. Lamborn

4. General Flex Corp.

5. Young & Co. Mfg. 165

6. Thermaflex 'GKM'

7. Cleavaflex

8. Hart & Cooley

2.09 FLEXIBLE EQUIPMENT CONNECTIONS (INDOOR)

A. General: 30 oz. closely woven UL approved glass fabric, double coated with neoprene. Fire retardant, waterproof, airtight, resistant to acids and grease, and withstand constant temperatures of 200°F.

B. Approved Manufacturers:

1. Ventglas by Ventfabrics

2. DuroDyne MFN

2.10 FLEXIBLE EQUIPMENT CONNECTIONS (OUTDOOR)

A. General: 26 oz. closely woven UL approved glass fabric, double coated with Hypalon. Fire retardant, waterproof, airtight, resistant to acids and grease, resistant to ozone and weathering, and withstand constant temperatures of 250°F.

B. Approved Manufacturers:

1. Ventglas by Ventfabrics

2. DuroDyne MFN

2.11 CEILING FIRE DAMPERS (RADIATION TYPE)

A. Must conform to and bear the UL 555C label.

B. Square and rectangular spring-loaded blades, STD. 165°F., links to fit steel ducts and or ceiling terminals, 3 - 4 hr. rating. Furnish with extended frame, thermal blankets for air terminals and square to round transitions as required.

C. For round neck diffusers, round butterfly dampers with STD. 165°F. links 3 - 4 hr. rating. Furnish with thermal blanket for air terminals at ceiling membrane.

2.12 VERTICAL & HORIZONTAL FIRE DAMPERS

A. Must conform to and bear the UL 555 label.

B. Out of airstream type "B" with standard 165-degree link. 1 ½ hour dampers for wall or floor construction of less than 3 hours. Three-hour dampers for wall or floor construction of 3 hours or greater.

C. In-air-stream type "A", dampers with standard 165-degree link for installation in existing duct (if any) and where "B" style dampers cannot be installed.

D. Fire dampers in round duct must be "C" style with both blades and frame located out-of-air-stream and standard 165-degree F. links.

2.13 COMBINATION FIRE/SMOKE DAMPERS

A. Furnish and install at location shown on plans combination fire/smoke dampers meeting or exceeding the following specifications:

1. Use 1 ½ hour dampers for wall or floor construction of less than 2 hours. Use 3-hour dampers for wall or floor construction of 2 hours or greater.

2. Frame shall be a minimum of 16-gauge galvanized steel formed into a structural hat channel shape with tabbed corners for reinforcement. The blades shall be single skin 16 gauge minimum galvanized with three longitudinal grooves for reinforcement. Bearing shall be stainless steel sleeve turning in an extruded hole in the frame. Blade edge seals shall be silicone rubber mechanically locked in blade edge (adhesive or clip fastened seals are not acceptable). Jamb seals shall be stainless steel flexible metal compression type.

3. Each combination fire/smoke damper shall be rated for 1.5 hours under UL Standard 555 and shall further be classified by UL as a leakage rated damper for use in smoke control systems under UL 555S and bear the UL labels for both UL 555 and UL 555S. Damper manufacturer shall have tested a range of damper sizes covering all dampers covered by the specification. Testing and qualifying a single damper size are not acceptable. The leakage rating under UL 555S shall be leakage Class II (10 cfm/sq.ft. at 1" W.G.)

4. Fire/smoke dampers may be round or square depending on the duct to which it is attached. Contractor must provide square-to-round adapters as required.

5. As part of the UL Qualification, dampers shall demonstrate a capacity to operate (open and close) under HVAC system operating conditions, with pressure of at least 4" W.G. in the closed position and 2000 fpm air velocity in the open position.

6. In addition to the leakage rating already specified herein, the dampers and their actuators shall be qualified under UL 555S to a minimum elevated temperature of 250°F. Appropriate 120-volt electric actuators shall be installed by the damper manufacturer at the time of damper fabrication. Damper and actuator shall be installed as a single entity which meets all applicable UL 555 and UL 555S qualifications for both dampers and actuators. Dampers must be open and close within 15 seconds of appropriate signal and dampers must close upon lack of power.

7. Manufacturer shall provide factory assembled sleeve of 17" minimum length (Contractor to verify requirement). Factory supplied caulked sleeve shall be minimum 20 gauge for dampers through 84" wide and 18 gauge above 84" wide if breakaway connections are provided, 16-gauge sleeves are required if other connection methods are provided. Damper and actuator assembly shall be factory cycled 10 times before shipment to assure operation.

8. Temperature Control Contractor shall provide all necessary switches and relays etc. to interface damper with smoke control system and building control system as described elsewhere in these specifications.

9. Fire/smoke dampers in tunnel corridor construction must bear UL 555 and UL 555S labels and meet all of the above criteria and have installation instructions showing UL approval for tunnel corridor construction.

10. Fire/smoke dampers shall be rated for no higher than Class II leakage and with an elevated temperature rating of not less than 250°F and shall bear both UL 555 and UL 555S labels.

11. In systems requiring a smoke control system, provide remote sensing of damper position and damper override of damper closure to permit controlled operation in a dynamic smoke management system. Device shall be Ruskin Model TS 150 Fire Stat or approved.

12. Approved Manufacturers:

    a. Ruskin

    b. Greenheck

    c. Air Balance

    d. National Controlled Air

    e. Prefco

2.14 AIRFLOW MEASUREMENT STATION

A. Provide airflow measurement systems for outside air. Airflow measuring stations shall be manufactured by Trane (TRAQ) or Ruskin (IAQ Damper). The airflow measurement stations shall be installed in strict accordance with the manufacturer's published requirements to achieve the accuracy listed below. The airflow measurement systems shall operate with a 24 VAC power supply and be capable of functioning accurately between -20°F and +158°F. The airflow measurement station shall transmit a 4-20 mA linear signal representative of velocity and be factory calibrated to provide accuracy of ±5 percent of actual flow down to 15 percent of the normal flow.

2.15 AIRFLOW MEASUREMENT SENSORS

A. Differential pressure airflow sensor shall traverse the duct using the equal cross-sectional area or log-linear traverse method along two perpendicular diameters. Single axis sensor shall not be acceptable for duct diameters 6” or larger. A minimum of 12 total pressure sensing points shall be utilized. The total pressure inputs shall be averaged using a pressure chamber located at the center of the senor. A sensor that delivers the differential pressure signal from one end of the sensor is not acceptable. The sensor shall output an amplified differential pressure signal that is at least 2.5 times the equivalent velocity pressure signal obtained from a conventional pitot tube. The sensor shall develop a differential pressure of 0.03” W.G. at an air velocity of < 450 FPM.

B. Approved Manufacturers:

1. Enviro-Tec

2. Titus

3. Krueger

2.16 DUCT SMOKE DETECTORS

A. General: Smoke detectors shall be installed in supply duct within 4'-0" of each air handler of 2000 cfm and above.

B. Responsibility: This Contractor shall be responsible for control circuit from smoke detectors to fan starter and to remote test station.

C. Equipment: Detectors shall be "Notifier" DH400 series with sampling tube. Remote test station shall be "Notifier" RTS 451.

2.17 OVEN EXHAUST HOOD (TYPE II HEAT)

A. General: 18-gauge stainless steel hood deep. Furnish with two (2) vapor proof incandescent fixtures, and stainless-steel baffle in lieu of filters.

B. Approved Manufacturers:

1. X-L Equipment
2. Kees
3. Air Masters
4. Gaylord
5. K-Tech
6. Vent Master

2.18 RANGE HOOD (TYPE I)

A. Furnish ventilator as shown on plans and in accordance with the following specifications:

1. General: Ventilator to be a high velocity centrifugal grease extractor, with two air inlet slots, one on each side of a single extractor. One slot to have an adjustable baffle to regulate the ratio of exhaust volume between the two slots. Ventilator to contain one or more removable "extractor inserts" with a grease extraction efficiency of 90% when operated in accordance with design specifications. Extractor inserts to be constructed of stainless steel and contain full-length, self-draining baffles. Extractor inserts to be easily removable, with an extractor removal tool, for periodic cleaning. The grease collecting gutter at the bottom of the extractor housing to slope to one end to a removable stainless-steel grease collecting container. Ventilator to operate at air quantities as shown on plans.

   a. Ventilator to be equipped with a spring-loaded damper located at the duct collar. Fire damper to be fuse link activated. Upon activation at 280°F., the damper shall close. Ventilator to be equipped with necessary hanging brackets for suspending from overhead.

2. Construction: The ventilator shall be of all stainless-steel construction, not less than 18-gauge, type 304. All exposed surfaces shall be a number 4 finish. All seams to be welded.

3. Lighting Fixtures: Ventilators to be equipped with 100-watt incandescent lights. Light fixtures to be factory prewired to a single connection point. Ventilators built in multiple sections to be furnished with junction boxes for field connections by electrical Contractor. (Recessed 150 watt incandescent or fluorescent fixtures optional).

4. Approvals: Ventilator(s) to be UL listed and recognized by BOCA, ICBO (refer to ICBO-ES, Inc. Evaluation Report No. 2064 for recognized ventilators), NSF and be in accordance with all recommendations of NFPA Standard #96. Each ventilator must meet all local codes.

5. Range Hood Ductwork: Exhaust ductwork to be stainless steel. See Section 23 3113 – Steel Ductwork.

6. Range Hood Fire Suppression: The fire suppression system shall be the dry chemical pre-engineered, piped, fixed nozzle type manufactured by Ansul. It shall be specifically UL listed for the hazard and installed in accordance with National Fire Protection Association Standard No. 96 (latest revision), "Standard for the Removal of Smoke and grease laden Vapors from Commercial Cooking Equipment" and conform to all local and/or state codes and standards. The design of the system shall provide for protection of duct systems, grease removal devices and hoods. Cooking equipment such as fat fryers, ranges, griddles and broilers, which may be a source of ignition of grease in the hood or duct shall also be protected. All sources of fuel and heat to the cooking equipment shall be shut off automatically upon operation of the system (subject to the requirements of NFPA Standard No. 96). The system shall be capable of automatic (connected to a suitably listed system of detection and actuation) and manual mechanical operation. Provide with (2) normally open, isolated contacts for interface with fire alarm and shunt trip systems.

7. Approved Manufacturers:

   a. K-Tech

   b. Vent Master

   c. Gaylord

2.19 DISHWASHER HOOD

A. Dishwasher hood to be 18-gauge stainless steel. Provide duct collar to match duct and closure panels on all three sides.

B. Dishwasher Hood Ductwork: Exhaust ductwork to be stainless steel. See Section 23 3113 – Steel Ductwork.

C. Approved Manufacturers:

1. Gaylord

2. K-Tech

2.20 FUME HOOD

A. Fume hood includes fire resistant counter-balanced sash. Hood interior and exterior is to be epoxy-coated steel. Approved manufacturers to be Labconco or approved equal.

B. Exhaust ductwork to be stainless steel. See Section 23 3113 – Steel Ductwork.

C. Fiberglass ductwork may be substituted for stainless steel, if permitted by the local jurisdiction.

2.21 KILN HOOD

A. Hood shall be a Vent-A-Kiln overhead counterweight pulley system with an 115V fan motor, 2 speed control with on and off switch and plug with a minimum 6-foot cord. Dimensions of hood shall be as called out on drawings.

2.22 FIELD APPLIED GREASE DUCT ENCLOSURE

A. Fire Barrier Duct Wrap: Meeting the criteria of ASTM E 2336, Standard Tests Methods for Fire Resistive Grease Duct Enclosure Systems and is UL listed as an alternative to grease duct shaft:

1. Zero clearance to combustibles.

2. Surface burning Characteristics: Flame Spread=0. Smoke Development=0.

3. Thermal Conductivity at 1,000°F is 1.15 Btu-inch per hour-foot squared - °F.

4. Blanket to be 0.9 lbs / sq. ft. and have an aluminum foil facing.

5. Approved Manufacturers:

a. 3M Fire Barrier Duct Wrap 615+

b. Thermal Ceramics FastWrap XL

B. Fire Barrier Grease Duct Access Doors: Meets the criteria of ASTM E 2336, Standard Tests Methods for Fire Resistive Grease Duct Enclosure Systems and is UL 1978 listed for grease leakage.

1. To be used in combination with the fire barrier duct wrap.

2. Approved Manufacturers:

a. 3M

b. Thermal Ceramics

2.23 FABRIC DUCT

A. Standard: Air diffusers shall be constructed of a coated woven fire-retardant fabric complying with the following characteristics:

1. Fabric Construction: 100% Polyester

2. Weight: 8.8 oz./yd² per ASTM D3776

3. Custom color to be specified by architect.

4. Air Permeability: 3 CFM/ft²

5. Temperature Range: 0 degrees F to 180 degrees F.

6. Fire Retardancy: Classified by UL in accordance with the flame spread/smoke developed requirements of NFPA 90-A.

B. Critical Environments: Fabric shall be constructed of a pliable porous textile media. Fabric shall be constructed of a non-lining filament textile that includes up to 55% recycled content, an active antimicrobial treatment an is UL Classified as an Air Distribution Device.

1. Shape: Cylindrical, Half Cylindrical, and Quarter Round

2. Weight: 5.4 oz./yd² per ASTM D3776

3. Custom color to be specified by architect (Standard is white)

4. Air Permeability: 6, 13, 25, 29, 50, 100, 165 CFM/ft² (at 0.5" w.c.)

5. Temperature Range: 0 degrees F to 180 degrees F.

6. Fabric air dispersion system shall be specifically designed for both constant volume and variable-air-volume flows.

C. System Fabrication Requirements:

1. Dispersion orifice sizing shall be as indicated.

2. Size, quantity, and location of orifices to be specified and approved by manufacturer.

3. Inlet connection to metal duct via fabric draw band with anchor patches as supplied by manufacturer. Anchor patches to be secured to metal duct via zip screw fastener – supplied by contractor.

4. Inlet connection and end cap shall include zipper for easy removal/maintenance.

5. Lengths to include required zippers as specified by manufacturer. Length shall be into segments that fit into commercial washer.

6. System to include Adjustable Flow Devices to balance turbulence, airflow and distribution as needed. Flow restriction device shall include ability to adjust the airflow resistance from 0.06 – 0.60 in w.g. static pressure.

7. Fabric system shall include connectors to accommodate specified suspension system.

8. Any deviation from a straight run shall be made using a gored elbow or an efficiency tee. Normal 90-degree elbows are 5 gores and the radius of the elbow is 1.5 times the diameter of the duct.

D. Suspension Systems:

1. Tension Cable: System shall be installed using a tension cable system including a single (1 Row) or double strands (2 Row) of cable located 3" above top-dead-center (1 Row) or 3" above the 10 and 2 o'clock locations of the DuctSox system. 2 Row supports are required for systems of 32" diameter and larger. Hardware to include cable, eye bolts, thimbles, cable clamps and turnbuckle(s) as required. System attachment shall be made using nylon cable clips spaced 24 inches. Component options include (must specify per area if multiple on same project):

   a. Galvanized Steel Cable

   b. Stainless Steel Cable

   c. Plastic Coated Stainless-Steel Cable

   d. Adjustable Gripple Mid-Supports – Available lengths: 5', 10', 15', 20' and 30'

2. 3x1 Suspension: (Available for duct diameters from 10” to 48”) System shall include a 3 Row connection to fabric system at 10, 12, and 2 o’clock locations. The powder-coated aluminum hangers are secured and connected to a single (1 Row) tension cable every 3’-0” and connect to the fabric system at the 10 and 2 o’clock locations with detachable D-Clasps. The fabric system will also have intermediate cable clips located at 12 o’clock and between the hangers to attach directly to the single tension cable system located 3” above top-dead-center location of the fabric system. Tension cable hardware to include cable, eye bolts, thimbles, cable clamps, and turnbuckles as required. Component options include:

    a. Galvanized Steel Cable

    b. Stainless Steel Cable

    c. Adjustable Gripple Mid-Supports – Available lengths: 5’, 10’, 15’, 20’ and 30’

3. 4x2 Suspension: (Available for duct diameters from 50” to 60”) System shall include a 4 Row connection to fabric system at 10, 11, 1 and 2 o’clock locations. The powder-coated aluminum hangers are secured and connected to a double (2 Row) tension cable every 3’-0” and connect to the fabric system at the 10 and 2 o’clock locations with detachable D-Clasps. The fabric system will also have intermediate cable clips located at 11 and 1 o’clock and between the hangers to attach directly to the double tension cable system located 1” above top-dead-center location of the fabric system. Tension cable hardware to include cable, eye bolts, thimbles, cable clamps, and turnbuckles as required. Component options include:

    a. Galvanized Steel Cable

    b. Stainless Steel Cable

    c. Adjustable Gripple Mid-Supports – Available lengths: 5’, 10’, 15’, 20’ and 30’

4. Suspended H-Track: System shall include a single (1 Row) or double (2 Row) runs of aluminum H-Track system located 1.5” above top-dead-center (1 Row) or 1.5” above the 10 and 2 o’clock (2 Row) locations of DuctSox system. 2 Row supports are required for systems of 32” diameter and larger. Hardware to include 10’ sections of track, splice connectors, track endcaps and vertical cable support kits – consisting of a length of cable with a locking stud end and Gripple quick cable connectors. Radius aluminum track must be included for all radius sections. Fabric / Track attachment:

    a. Cord In continuous supporting cord (not suggested for systems >24” Dia.)

b. Track tabs are a detachable tab positioned every 24” along the length of the system (all diameters).

c. Hardware components (optional):

1) Provide 316 Stainless Steel components including coupler assembly, vertical cable support and Gripple quick cable connector.

5. 3x1 H-Track Suspension: (Available for duct diameters from 10” to 48”) System shall consist of a 3x1 hanger used in conjunction with an H-track suspension system. System shall include a 3 Row connection to fabric system at 10, 12, and 2 o’clock locations. The powder-coated aluminum hangers are secured and connected to a single (1 Row) aluminum H-track every 3’-0” and connect to the fabric system at the 10 and 2 o’clock locations with detachable D-Clasps. The fabric system will also have intermediate track tabs located at 12 o’clock and between the hangers to attach directly to the H-track suspension system located 3” above top-dead-center location of the fabric system. Hardware to include Hardware to include 10’ sections of track, splice connectors, track endcaps and vertical cable support kits – consisting of a length of cable with a locking stud end and Gripple quick cable connectors. Radius aluminum track must be included for all radius sections.

6. 4x2 H-Track Suspension: (Available for duct diameters from 50” to 60”) System shall consist of a 4x2 hanger used in conjunction with an H-track suspension system. System shall include a 4 Row connection to fabric system at 10, 11, 1, and 2 o’clock locations. The powder-coated aluminum hangers are secured and connected to a double (2 Row) aluminum H-track every 3’-0” and connect to the fabric system at the 10 and 2 o’clock locations with detachable D-Clasps. The fabric system will also have intermediate track tabs located at 11 and 1 o’clock and between the hangers to attach directly to the H-track suspension system located 1.5” above top-dead-center location of the fabric system. Hardware to include Hardware to include 10’ sections of track, splice connectors, track endcaps and vertical cable support kits – consisting of a length of cable with a locking stud end and Gripple quick cable connectors. Radius aluminum track must be included for all radius sections.

7. Flush-Mount Track: System shall include aluminum Flush-Mount system located 1.5” above top-dead-center of DuctSox system. Hardware to include 12’ section of track, track tabs, splice connections and end caps as required. Track tabs must promote easy sliding movement through aluminum track and must be detachable from the fabric. Radius aluminum track for support of the elbows through the corners using either Track tabs or Cord-In. Fabric / Track attachment:

a. Cord In continuous supporting cord (not suggested for systems >24” Dia.)

b. Track tabs are a detachable sliding tab positioned every 24” along the length of the system (all diameters).

8. Surface Mount: System shall include aluminum C-mount track system located flush with the top of DuctSox system. 80% of track to be concealed by fabric at final installation. Hardware to include 8’ sections of track, splice connections and end brackets as required. System attachment shall be made by cord sewn into top side flaps of DuctSox system supported entire length.

9. Skele Core Cylindrical Tensioning System with Tension Cable: (Available for duct diameters from 8” – 36”) System shall tension fabric in both the length and circumference of the DuctSox. Full 360-degree cylindrical rings with quick connection spacer tubes in the interior of the system. Fittings and end cap rings to be adjustable. Inlets and fittings to have tensioning anchor clips. Metal to metal safety connection device required from ring tube to cable. System shall be installed used a tension cable system with 1 row cable located 3” above top-dead-center. Hardware to include cable, eye bolts, thimbles, cable clamps and turnbuckle(s) as required. System attachment shall be made using nylon cable clips spaced 24 inches.

10. Skele Core Cylindrical Tensioning System with Suspended H-Track: (Available for duct diameters from 8” – 36”) System shall tension fabric in both the length and circumference of the DuctSox. Full 360-degree cylindrical rings with quick connection spacer tubes in the interior of the system. Fittings and end cap rings to be adjustable. Inlets and fittings to have tensioning anchor clips. Metal to metal safety connection device required from ring tube to track. System shall be installed used a suspended H-Track system with 1 row hanging located 1.5” above top-dead-center. Hardware to include 10’ sections of track, splice connectors, track endcaps and vertical cable support kits – consisting of a length of cable with a locking stud end and Gripple quick cable connectors.

11. Skele Core Cylindrical Tensioning System with Flush-Mount Track: (Available for duct diameters from 8” – 36”) System shall tension fabric in both the length and circumference of the DuctSox. Full 360-degree cylindrical rings with quick connection spacer tubes in the interior of the system. Fittings and end cap rings to be adjustable. Inlets and fittings to have tensioning anchor clips. Metal to metal safety connection device required from ring tube to track. System shall be installed used a flush-mount track system with 1 row hanging located 1.5” above top-dead-center. Hardware to include 12’ sections of track, splice connectors, track endcaps.

PART 3 - EXECUTION

3.01 EXAMINATION

A. Examine areas for compliance with requirements for installation tolerances and for structural rigidity, strength, anchors, and other conditions affecting performance of heat exchangers.

1. Proceed with installation only after unsatisfactory conditions have been corrected.

3.02 INSTALLATION

A. Backdraft Dampers: Provide access doors to backdraft dampers.

B. Filters and Filter Housing:

1. Contractor to install temporary filters to provide temporary sealing of all duct systems during the construction period to prevent the entry of dirt, dust and debris into the duct systems. These systems that are operated during the construction period shall have temporary filters installed over all inlets and filters installed in the air handling equipment. Filters installed in equipment shall be same type as final filters required for the units. Temporary air inlet type filters shall be taped over all inlets to completely filter all air drawn into the systems.

2. Contractor to provide and install four (4) complete sets of all filters as scheduled below:

   a. At equipment start-up

   b. Prior to balancing system

   c. Three (3) months after building occupancy

   d. During the one-year warranty to be scheduled with Owner

3. Construct and install filter housings to prevent passage of unfiltered air. Provide sheet metal blanks, felt, rubber, and/or neoprene seals as necessary.

4. Provide air filter gauge on units over 2000 cfm. Connect sensing tips to gauge with copper or aluminum tubing. Locate gauge in easily read position, provide brightly colored tape marker to indicate clean filters pressure drop and change-out pressure drop (use clean pressure drop plus 0.15" unless instructed otherwise).

5. Furnish Owner with schedule of filter sizes for each air handler, heat pump, furnace, and fan coil unit.

C. Flexible Equipment Connections:

1. Provide insulated flexible equipment connections between ducts and vibrating equipment. Fans which are internally isolated with spring isolators do not require flexible connections, unless indicated on the plans.

2. Install flexible connections with sufficient slack to permit 2 inches of horizontal or vertical movement of ducts or equipment at connection point without stretching the flexible material.

3. Where installed exposed to weather, provide a galvanized "hat" channel protecting top and vertical stretches of flexible connector from sunlight and weather.

D. Flexible Ductwork:

1. Install duct in fully extended condition free of sags and kinks, using ten-foot maximum lengths.

2. Make duct connections by coating exterior of duct collar for 3 inches with duct sealer and securing duct in place over sheet metal collar with 1/2-inch-wide metal cinch bands and sheet metal screws. Tape exterior of flex to duct ahead of damper.

E. Fire and Fire/Smoke Dampers:

1. Fire damper installation shall conform to details shown in the UL installation instructions for the particular damper.

2. Each fire damper or fire/smoke damper shall have an access panel located not more than 6 inches from the fire damper served. Access panel shall not be less than 10" x 10" or equivalent size in smaller ducts.

3. Ceiling radiation dampers must be installed in a UL rated ceiling assembly as explicitly described in the UL Fire Resistance Directory.

4. All dampers must be installed strictly in accordance with the UL installation instructions that must accompany the dampers and be available on site for the appropriate building inspector to view.

F. Install duct smoke detectors in air handling units over 2000 CFM.

G. Hoods:

1. Anchor hood units securely to structure.

2. Hood manufacturer shall obtain a signed statement from the Contractor verifying ceiling height at hood location prior to fabrication.

H. Field Applied Grease Duct Enclosures:

1. Fire barrier duct wrap is required on all Type I grease duct that is not protected by a grease duct shaft. Install fire barrier duct wrap in two layers per the manufacturer's instructions.

2. Install grease duct access doors as indicated on the plans or as required in Section 23 3113.

I. Fabric Duct:

1. Hanger and Suspension System Installation:

a. Install chosen suspension system in accordance with the requirements of the manufacturer. Instructions for installation shall be provided by the manufacturer with product.

b. Install suspension system level, run suspension system parallel and perpendicular with major building structure components.

c. Install suspension system components to building structure. Attach suspension system components to building structure using conventional industry accepted means.

2. Connections:

a. Install fabric air dispersion systems with fewest possible joints.

b. Unless otherwise indicated, install fabric air dispersion systems horizontally, and parallel and perpendicular to building lines.

c. Where fabric air dispersion systems pass through non-fire-rated interior partitions and exterior walls and are exposed to view, provide metal duct within the partition. Fabric air dispersion system shall not penetrate wall assembly

d. Where fabric air dispersion systems pass through fire-rated interior partitions and exterior walls, install fire dampers. Comply with requirements in Division 23 Section "Air Duct Accessories" for fire and smoke dampers. Provide sheet metal extensions from housing of fire damper to connect fabric air dispersion system on either side of fire damper.

3. Field Quality Control:

a. Test, adjust and balance air handling equipment, main supply air ductwork and branch supply air ductwork. Replace any damaged or malfunctioning HVAC system components upstream of inlet to fabric air dispersion system.

4. Cleaning:

   a. After completing system installation, including outlet fitting and devices, inspect exposed finish. Apply edge guard to edge of sheet metal ductwork prior to installation of fabric air dispersion system.

   b. Clean air handling unit and ductwork prior to the DuctSox system unit-by-unit as it is installed. Clean external surfaces of foreign substance which may cause corrosive deterioration of facing.

   c. If DuctSox systems become soiled during installation, they should be removed and cleaned following the manufacturers standard terms of laundry. Refer to manufacturer's published literature for proper laundering methods.

END OF SECTION

SECTION 23 3423

EXHAUST FANS

PART 1 - GENERAL

1.01 GENERAL

A. Includes, but not limited to, furnishing and installing specified material as described in Contract Documents.

1.02 RELATED SECTIONS

A. General Conditions and Division 1 apply to this Section.

B. Section 20 0000 - General Mechanical Conditions

C. Section 23 3113 – Steel Ductwork

1.03 QUALITY ASSURANCES (REQUIREMENTS OF REGULATORY AGENCIES)

A. Bear AMCA seal, UL 507 (for continuous operation), and UL 705 (volume control by speed control on direct drive units).

1.04 SUBMITTAL REQUIREMENTS OF THIS SECTION

A. Exhaust Fans

B. Exhaust Fan Curbs (Rooftop Fans)

C. Fan curves showing system curve, and a fan curve with the maximum operation point with maximum motor size (limited by maximum shaft speed of and/or surge point).

1.05 OPERATION AND MAINTENANCE OF THIS SECTION

A. Submittal Data including Curves

B. Exhaust Fan Operation and Maintenance Manual

PART 2 - PRODUCTS

2.01 ROOF MOUNTED (DOWN BLAST) EXHAUST FANS

A. General:

1. Direct drive or have adjustable pitch V-belt as noted on plans.

2. Wheels shall be backward curved with aluminum housing.

3. Isolate motor with vibration dampeners.

4. Provide quiet type back-draft dampers where indicated on drawings.

B. Roof Curbs:

1. Provide with prefabricated insulated roof curb.

2. Curb shall be constructed of galvanized steel or aluminum with a solid metal interior liner, 1½" thick 3 lb. density insulation, include damper tray for a motorized damper, and rubber curb seal.

3. Curb shall be provided with factory mounted hinged base.

4. Curb shall be 14" tall (minimum).

5. Furnish with cant strip where installed on roofs with insulation below the roof deck.

6. Approved Manufacturers:

a. Breidert

b. Carnes

c. Cook

d. Greenheck

e. Jenn

f. Penn Barry

g. Twin City Fans

2.02 UTILITY SET FANS

A. General:

1. Direct drive, forward curve, upflow discharge utility fan.

2. 16-gauge minimum steel housing.

3. Wheels to be dynamically balanced with quiet operation.

4. Suitably ground motors and mount on rubber-in shear vibration isolators.

5. Provide quiet type non-chattering backdraft damper.

6. Approved Manufacturers:

a. Air Control Products

b. Greenheck

c. Peerless

d. Penn Barry

e. Twin City Fans

2.03 IN-LINE FANS

A. General:

1. Motors on V-belt units shall be supported on the exterior of the fan casing with bearings encased within the fan tube.

2. All models shall incorporate a panel to permit access to interior.

3. Centrex wheels shall be backwardly inclined, non-overloading and made of aluminum.

4. Inlets shall be deep spun for non-turbulent entrance condition.

5. Approved Manufacturers:

a. Cook

b. Greenheck

c. Pace

d. Penn Barry

e. Twin City Fans

2.04 ROOF MOUNTED (UP BLAST) EXHAUST FANS

A. Description:

1. Fan shall be spun aluminum, roof mounted, belt driven, up blast centrifugal exhaust ventilator.

B. Certifications:

1. Fan shall be listed by Underwriters Laboratories (UL 762) and UL listed for Canada (UL 762). Fan shall bear the AMCA certified ratings seal for sound and air performance.

C. Construction:

1. The fan shall be of bolted and welded construction utilizing corrosion resistant fasteners. The spun aluminum structural components shall be constructed of minimum 16-gauge marine alloy aluminum, bolted to a rigid aluminum support structure.

2. The aluminum base shall have a one-piece inlet spinning and continuously welded curb cap corners for maximum leak protection.

3. The motor, bearings and drives shall be mounted on a minimum 14-gauge steel power assembly, isolated from the unit structure with solid vibration isolators. The components shall be enclosed in a weather-tight compartment, separated from the exhaust airstream.

4. Unit shall bear an engraved aluminum nameplate.

D. Wheel:

1. Wheel shall be centrifugal backward inclined, constructed of 100 percent aluminum, including a precision machined cast aluminum hub. Wheel inlet shall overlap an aerodynamic aluminum inlet cone to provide maximum performance and efficiency. Wheel shall be balanced in accordance with AMCA standard 204-96, balance quality and vibration levels for fans.

E. Motor:

1. Motor shall be heavy duty type with permanently lubricated sealed ball bearings and furnished at the specified voltage, phase and enclosure.

2. Motor shall be explosion-proof, when indicated on drawings.

F. Bearings:

1. Bearings shall be designed and individually tested specifically for use in air handling applications. Construction shall be heavy duty regreasable ball type in a cast iron housing selected for a minimum L50 life in excess of 200,00 hours at maximum cataloged operating speed.

G. Belts and Drives:

1. Belts shall be oil and heat resistant, non-static type. Drives shall be precision machined cast iron type, keyed and securely attached to the wheel and motor shafts. Drives shall be sized for 150 percent of the installed motor horsepower. The variable pitch motor drive must be factory set to the specified fan RPM.

H. Roof Curbs:

1. Provide with prefabricated insulated roof curb.

2. Curb shall be constructed of galvanized steel or aluminum with a solid metal interior liner cover, 1½" thick 3 lb. density insulation, include damper tray for a motorized damper, and rubber curb seal.

3. Curb shall be provided with a factory mounted hinged base.

4. Curb shall be 14" tall (minimum) for all non-grease fans.

5. Provide a vented curb extension for all grease fans to provide the required 40" minimum discharge height above the roof line.

6. Furnish with 2" wide flashing all around with cant strip.

7. Approved Manufacturers:

   a. Cook

   b. Carnes

   c. Penn Barry

   d. Greenheck

   e. Jenn

   f. Twin City Fans

2.05 IN-LINE CABINET FANS

A. General:

1. Acoustically insulated housings

2. True centrifugal wheels

3. Suitable ground motors and mounts on rubber-in shear vibration isolators

4. Motor and drive assembly shall be accessible through removable side panels

B. Approved Manufacturers:

1. Carnes

2. Cook

3. Greenheck

4. Jenn

5. Penn Barry

6. Twin City Fans

2.06 IN-LINE DRYER FANS

A. General: Supply, exhaust or return air inline fans shall be of the centrifugal, direct driven type.

B. Construction:

1. Fan housing shall be constructed of heavy gauge galvanized sheet metal with powder coated finish. Internal air turning vanes shall be provided for maximum air performance. Fan shall be supplied with externally mounted electrical terminal strip connections. Integral disconnect switch shall be provided when specified.

2. Motorized impeller shall be an external rotor type, class B insulation, totally enclosed with permanent split capacitor (except K4 and K5, shaded pole type). Motor shall be permanently sealed self lubricating ball bearing type. Motor shall be equipped with automatic reset thermal overload protection. Motor shall be provided to ensure long maintenance free operation over maximum load conditions.

3. Fan wheel shall be of the backward inclined airfoil type with a well-designed inlet venturi for maximum performance. Motorized impeller shall be both statically and dynamically balanced as one integal unit to provide for vibration free performance.

C. Performance: Fan air flow and sound performance shall be certified by AMCA and licensed to bear the AMCA Certified Ratings seal.

D. Code Approval: Fan shall be tested and approved by UL and CSA (or equal) for safety.

E. Warranty: Fan shall be fully warranted for a period of no less than three years from the date of installation.

F. Approved Manufacturers:

1. Kanalflakt

2.07 PROPELLER FANS

A. Propeller fans shall be direct drive type with wire basket rear guard. Blades shall be statically and dynamically balanced. Resilient mounted motor. Furnish with combination louver/shutter.

1. Approved Manufacturer:

   a. Breidert

   b. Carnes

   c. Cook

   d. Greenheck

   e. Jenn

   f. Penn Barry

   g. Twin City Fans

2.08 CEILING MOUNTED EXHAUST FAN

A. General:

1. Acoustically insulated housings.

2. Include chatterproof integral back-draft damper with no metal contact.

3. True centrifugal wheels.

4. Entire fan, motor, and wheel assembly shall be easily removable without disturbing housing.

5. Suitably ground motors and mount on rubber-in shear vibration isolators.

6. Provide roof cap or wall cap as required.

7. Provide “Architectural deluxe” metal grille.

B. Approved Manufacturers:

1. Penn Barry

2. Cook

3. Greenheck

4. Twin City Fans

2.09 SPEED CONTROL

A. Use manufacturer's recommended speed control, which varies speed from 50 to 100% of full speed.

B. All fan motors 1/12 HP or greater and less than 1 HP shall be Electronically Commutated Motors (ECM) or shall have a minimum efficiency of 70 percent when rated in accordance with DOE 10 C.F.R. 431. These motor speeds shall be adjustable.

PART 3 - EXECUTION

3.01 INSTALLATION

A. Anchor fan units securely to structure or curb.

B. Extend all internal wiring to box on exterior of unit.

C. Factory mount speed control on outside of case on in-line fans, including wall propeller fans, and underneath weather casing for rooftop fans.

D. Grease hood exhaust fan. Up-blast discharge shall be a minimum of 40" from top of fan to roof. Provide with vented curb and replaceable grease termination receptor.

END OF SECTION

SECTION 23 3600

VAV TERMINAL BOX UNITS

PART 1 - GENERAL

1.01 SUMMARY

A. Includes But Not Limited To: Furnish and install specified material as described in Contract Documents.

B. Related Sections: General Conditions and Division 1 apply to this Section.

1.02 SUBMITTAL REQUIREMENTS OF THIS SECTION

A. Fan terminal boxes

B. VAV Shut-off boxes

C. Sound Data (discharge, intake, and radiated)

1.03 OPERATION AND MAINTENANCE REQUIREMENTS OF THIS SECTION

A. Submittal Data

B. Unit Operation and Maintenance Manual

PART 2 - PRODUCTS

2.01 APPROVED MANUFACTURERS

A. Trane

B. Titus

C. Nailor

D. Price

E. ENVIRO-TEC (ETI)

2.02 FAN TERMINAL VAV BOX

A. Fan Terminal Box Unit:

1. Horizontal constant fan series.

2. Standard UL approved unit consists of: Casing, fan, motor and drive, coils, single point electrical connection, control power transformer, fan relay, control box, filter section, and electrical components

B. Casing:

1. Single wall constructed of 22-gauge minimum galvanized steel. Provide with flange at outlet and inlets for duct connections.

2. Insulated with 1", 1.55 lb./cu. ft. density glass fiber, coated to retard erosion, meets NFPA 90A and UL 181.

3. Entire bottom panel to be removable for service of components.

C. Fan, Motor and Drive:

1. Forward curved, centrifugal type, aluminum wheel with factory-built housing and inlet cones, direct drive.

2. Fans are statically and dynamically balanced.

3. Motors to be permanently lubricated, permanent split capacitor type with thermal overload protection.

4. Motors rated for 100,000-hour life.

5. Motors to be factory run tested in unit.

6. ECM motor with factory mounted controller to change fan motor speed. Adjustment knob located external to control panel.

7. Fan Control Relay - 24 VAC coil, rated as required for fan motor, suitable for connection to terminal unit controller.

D. Damper Assemblies of 16-gauge, galvanized steel shall be multiple opposed blade construction arranged to close at 45 degrees from full open to minimize air turbulence. Damper blades shall be fitted with flexible seals for tight closure. In the fully closed position, air leakage past the closed damper shall not exceed 2% of the nominal catalog rating a 3.0” wg inlet static pressure as rated by ASHRAE Standard 130. Each unit shall be complete with factory mounted DDC controls including actuators, which shall be fully coordinated with Controls Contractor prior to equipment ordering. Gauge tap ports shall be supplied in the piping between the flow pick up and the controller.

2.03 SHUT-OFF VAV BOX

A. Casing:

1. Unit casing shall be 22-gauge, galvanized steel with round or flat oval inlets (flanged).

2. Units shall be internally lined with 1” dual density fiberglass insulation. Edges shall be sealed against airflow erosion. Units shall meet NFPA 90A and UL 181 standards.

B. Inlet Damper Assemblies shall be of galvanized steel construction with a fully closed leakage rate no greater than 2% at 3.0” wg. Damper blades shall be fitted with flexible seals for tight closure. In the fully closed position, air leakage past the closed damper shall not exceed 2% of the nominal catalog rating a 3.0” wg. inlet static pressure as rated by ASHRAE Standard 130. Each unit shall be complete with factory mounted DDC controls including actuators, which shall be fully coordinated with Controls Contractor prior to equipment ordering. Gauge tap ports shall be supplied in the piping between the flow pick up and the controller.

2.04 HOT WATER COILS

A. Coil is to be factory mounted on the discharge outlet. Full fin collars are to be provided for accurate fin spacing and maximum fin tube contact. Seamless copper tubes are to be mechanically expanded in to the fin collars. Coils are to be leak tested at 300 psig air pressure under water. Provide with female sweat-type water connections with same side connects. See drawings for connection side.

2.05 ELECTRIC COILS

A. Provide electric coils sized and staged per equipment schedule.

PART 3 - EXECUTION

3.01 GENERAL

A. Physical size and noise criteria will be strictly enforced. Approved manufacturers are listed for quality only, not for noise and size. It is up to the equipment supplier to provide equal VAV boxes to those listed on the schedule.

END OF SECTION

SECTION 23 3700

AIR TERMINALS

PART 1 - GENERAL

1.01 SUMMARY

A. Includes But Not Limited To:

1. Furnish and install complete, all air terminals described in Contract Documents.
2. Ceiling diffusers with damper
3. Louvers connected to ductwork
4. Roof hoods

1.02 RELATED SECTIONS

A. General Conditions and Division 1 apply to this Section.

B. Section 20 0000 - General Mechanical Conditions

1.03 SUBMITTAL REQUIREMENTS OF THIS SECTION

A. Grilles, registers, and diffusers

B. Louvers

C. Wall caps

D. Roof hoods

1.04 OPERATION AND MAINTENANCE REQUIREMENTS OF THIS SECTION

A. Not Applicable

PART 2 - PRODUCTS

2.01 GRILLES, REGISTERS AND DIFFUSERS (GRD)

A. Shall be as scheduled on drawings.

B. Provide the various grilles, registers and diffusers shown on the plans and of the various types herein before specified. All terminals with prime-coat finish shall be installed before the walls and ceiling is painted, in order that they may be finish painted by the General Contractor. Those with factory finish or aluminum construction shall be installed after the walls and ceilings are painted. All air terminals located in shower, toilet rooms, locker and dressing rooms shall be of aluminum construction w/baked off-white finish. All other Air Terminals shall be of a standard steel construction; wall-mounted terminals shall be prime coat finish; ceiling diffusers, exhaust and return air terminals shall have factory-applied baked enamel finish, color as selected by Architect.

C. Approved Manufacturers: (subject to submittal approval):

1. Anemostat
2. Nailor
3. Kees
4. Krueger
5. Price
6. Titus
7. Tuttle & Bailey
8. Shoemaker (except 700MA)

2.02 LOUVERS

A. Provide stationary type with 4” frame, drainable blades, and aluminum bird screen. Frame and blade shall be 6063-T-5 aluminum alloy. Blades shall be at 37.5° angle and supported by hidden mullions. Intermediate support mullions shall not interrupt blade exterior appearance. Louvers shall receive finish color coating of modified fluoropolymer baked enamel following cleaning and pretreatment of metal. A 50% Kynar resin shall provide approximately 0.3” total dry film thickness when baked at 450°F. Color shall be as selected by the Architect. Provide appropriate frame type for installation type.

B. Louvers shown are minimum sizes for airflow requirements. Refer to Architectural elevations for exact size and location of louvers. This contractor is to provide full size louver as shown on the plans or Architectural elevations (whichever is larger), including but not limited to: hidden mullions, louver extensions, and louver shapes. Any louver area not used for ductwork shall be blanked off with sheet metal. The General Contractor to provide insulation for blanked off sections.

C. Louver performance shall be as follows:

1. Maximum S.P. drop of 0.15" at 800 ft./min.

2. Minimum beginning point of water penetration at 0.01 oz/sq. ft. is 800 feet per minute (48”x48” size at 15-minute test period).

3. Minimum AMCA rated free area of 54% (48”x48” size).

4. Approved Manufacturers:

   a. Ruskin (ELF 375DX)

   b. American Warming

   c. Wonder Metals

   d. Greenheck

   e. Metal Form

   f. United Enertech

2.03 WALL CAPS

A. Wall caps shall be constructed of extruded aluminum, with bird screen, sizes and model numbers as indicated on plans.

B. Dryer vent caps shall be of aluminum construction with integral backdraft damper.

2.04 ROOF HOOD

A. Manufactured of extruded aluminum complete with roof curb to fit slope of roof and have minimum 12” height.

   1. ½ inch mesh 16-gauge aluminum bird screen

   2. Units shall be factory prime coated to be field painted. Coordinate with General Contractor to field paint; color selected by Architect.

   3. Size: Roof vents shall have throat size as shown on the drawings.

   4. Dampers: Dampers shall be gravity, counter-balanced, or motorized.

   5. Provide 4” wide flashing all around, with cant strip.

   6. Approved Manufacturers:

      a. Cook

      b. Penn Ventilator

      c. Greenheck

d. Equals as approved by Architect

B. For Dryers and Residential Type Hoods:

1. PennBarry WC

2. Greenheck GRSR/GRSF

2.05 MISCELLANEOUS

A. Bird Screen: 1/2-inch mesh, constructed of either 0.051-inch aluminum wire or 19-gauge galvanized steel wire.

B. Insect Screen: 14 x 18, 0.009” galvanized steel mesh.

PART 3 - EXECUTION

3.01 INSTALLATION

A. The interior of duct connection including opposed blade damper and all visible duct interiors at connection shall be painted matte black.

B. Each air terminal shall be installed with a spun rubber gasket between the flange and the frame or wall.

C. Each air terminal with flexible duct connection shall have a square-to-round transition adapter box.

D. Anchor securely into openings.

E. All air terminals that supply, return, and/or exhaust air, which are not required to have an OBD, shall be provided with a volume damper.

F. Provide round neck to flex duct reducers as required.

G. Provide bird screened openings (1/2" mesh) on all duct openings where indicated and where openings do not have grilles or registers.

H. All outlet and inlets exposed to the weather shall be adequately flashed and installed in a manner to assure complete weatherproofness.

I. Provide blank-off panels on louver portion not connected to a duct. Blank-off panels to be painted flat black.

J. Install louvers level and plumb.

K. Secure louver frames in openings with concealed fasteners.

L. Provide bird screen for all louvers, wall caps, and roof hoods.

M. Provide insect screen where indicated on drawings.

N. Install roof caps in accordance with manufacturer's recommendations.

O. Provide louvers with motorized dampers on all ductless, through wall relief penetrations unless otherwise noted on the drawings.

END OF SECTION

SECTION 23 7300

AIR HANDLING UNITS WITH COILS

PART 1 - GENERAL

1.01 SUMMARY

A. Includes But Not Limited To: All air handling units:

B. Related Sections:

1. General Conditions, Division 1
2. Section 20 0000 - General Mechanical Requirements
3. Section 23 0513 - Motors and Variable Drives
4. Section 23 3300 - HVAC Specialties

1.02 QUALITY ASSURANCE

A. Units with coils shall be ARI certified and bear certification symbol.

1.03 SUBMITTAL REQUIREMENTS OF THIS SECTION

A. Equipment

B. Fan Curves

C. Sound Data

1.04 OPERATION AND MAINTENANCE REQUIREMENTS OF THIS SECTION

A. Submittal Data

B. Operation and Maintenance Manual

PART 2 - PRODUCTS

2.01 APPROVED MANUFACTURERS

A. McQuay

B. Trane Climate Changer

C. York

2.02 AIR HANDLING UNITS

A. Air handling units shall be complete with components specified below:

1. Cabinets: Constructed of 18-gauge steel with protective enamel on zinc coated finish or galvanized steel, adequately braced and reinforced, and of sectionalized construction.

2. Panels shall be removable for easy access to interior of unit.

3. With interior mounted motors, hinged access doors with ventlock style handle.

4. Cabinet panels shall be internally insulated with one inch thick, 1-1/2 lb density, matte-faced glass fiber insulation or equivalent. Contractor shall be responsible for sealing exposed edges or damaged liner with mastic sealer to prevent erosion into airstream. Insulation, adhesive, and mastic sealer (if required) shall conform to NFPA 09A.

2.03 DRAIN PAN

A. Provide insulated drain pan with condensate drain connections at each end. Extend drain pan under coil headers and refrigerant distributors. Plug unused ends.

2.04 FANS

A. Double inlet, double width, forwardly curved centrifugal type designed for Class I operation.

B. Base fan ratings on test conducted in accordance with AMCA Code #210.

C. Construct fan housings with streamline inlet and side sheets.

D. Fans shall be statically and dynamically balanced and tested as an assembly at design RPM to meet design specifications. Maximum rated fan RPM shall be below first critical fan shaft speed.

E. Flexible connection to unit cabinet.

F. Fan shall be internally isolated with 2" open spring isolation.

2.05 FAN SHAFT

A. Solid high carbon steel.

2.06 BEARINGS

A. Self-aligning, grease lubricated, ball type, and shall perform to L50 200,000-hour average life.

B. Provide lubrication fittings. Permanently lubricated bearings are not acceptable.

C. Provide clear extended lubrication lines to accessible side of unit.

2.07 SHEAVES AND BELTS FOR NON-VARIABLE DRIVES

A. Rate V-belt drives at 150% of motor rating.

B. Motor sheaves shall be of adjustable pitch type giving 30% speed variation.

2.08 MOTORS

A. As described in Contract Documents and mounted internal to unit with fan, motor, and drive assembly internally isolated. Mount motor on adjustable slide base to allow belt tightening.

B. Locate motor on side of unit most accessible.

C. See Section 23 0513 for motor efficiencies.

2.09 COILS

A. Coils shall be mounted in the unit casing to be accessible for service and can be removed from the unit through the side and top. Capacities, pressure drops and selection procedure shall be certified in accordance with ARI Standard 410.

B. Provide factory installed extended drain and vent connections for water coils.

C. Water Cooling and Heating Coils:

1. All coils shall be enclosed in an insulated coil section. Coil headers and U-bends shall not be exposed.

2. Waterflow shall be counter to airflow.

3. Coils shall be proof tested to 300 psig and leak tested to 200 psig air pressure under water.

4. Headers shall be round copper pipe or cast iron. Steel pipe headers are not acceptable. Tubes shall be (1/2-inch OD, .016" thick) or (5/8-inch OD, .020" thick).

D. Steam Heating Coils:

1. Non-freeze distributing type steam coils, shall be pitched in the unit casing for proper drainage of steam condensate from coil.

2. Tube arrangement shall be 1-inch OD copper outer tube with 11/16-inch OD copper inner tube.

3. Coils to have cast iron headers with internally threaded connection. Steel pipe headers are not acceptable.

4. Coils to be proof tested at a minimum of 300 psig and leak tested at 200 psig air pressure under water.

E. Refrigerant Cooling Coils:

1. All coils shall be enclosed in an insulated coil section. U-bends shall not be exposed. Suction and distributor headers shall be made of copper tubing and penetrate coil cover panel to allow for sweat connection of refrigerant lines.

2. Coils shall be proof tested to 450 psig and leak tested to 300 psig, air pressure under water. Coils shall be dried after testing and filled with a 10 psig holding charge of nitrogen.

3. Coils shall have an equalizing type vertical distributor to ensure that each coil circuit receives the same amount of refrigerant liquid.

2.10 FILTER BOXES

A. See Section 23 3300 - HVAC Specialties.

2.11 MIXING BOX AND DAMPERS

A. Provide internally mounted ultra low leak air dampers. Dampers shall be Ruskin CD60 double-skin airfoil design or equivalent. Construct damper blades and damper frames of galvanized steel.

B. Provide blade action with metal compressible jamb seals.

C. Blades shall rotate on stainless steel sleeve bearings.

D. Leakage rate shall not exceed 5 CFM/sq. ft. at 1” water gauge. All leakage testing and pressure ratings will be based on AMCA Publication 500.

PART 3 - EXECUTION

Not applicable

END OF SECTION

SECTION 23 8126

DUCTLESS SPLIT SYSTEMS

PART 1 - GENERAL

1.01 GENERAL

A. Includes, but not limited to, furnishing and installing material as described in Contract Documents.

B. Ductless split systems shall be separate from VRF systems.

1.02 RELATED SECTIONS

A. Drawings and general provisions of the Contract, including General and Supplementary Conditions and Divisions 01 Specification Sections, apply to this Section.

B. Section 20 0000 - General Mechanical Requirements

C. Section 23 2300 – Refrigerant Piping System

D. Section 23 3300 - HVAC Specialties

1.03 QUALITY ASSURANCE

A. Qualifications: Air-cooled condensing section shall be rated according to ARI standards.

B. Requirements of Regulatory Agencies: Each unit shall be UL labeled.

1.04 WARRANTY

A. This Contractor shall warrant the systems to be free from defects in material, equipment and workmanship under normal use and service and any time within one (1) year as defined in Section 20 0000, with repair or replacement without cost to the Owner, any material, equipment or workmanship found to be defective. The date of final acceptance shall be recorded on a warranty certificate for each unit. The certificate is to be included in Operation & Maintenance Manual.

B. At the end of the first year the contractor shall present a service contract to the owner which would cover the following warranty and filter replacement:

C. In addition to the above one-year warranty, all motor compressors furnished under this Contract shall be warranted to be free from defects in material and workmanship under normal use and service for an additional four (4) years.

1.05 REFERENCES

A. ARI 210/240 - Unitary Air-Conditioning and Air-Source Heat Pump Equipment

B. ARI 270 - Sound Rating of Outdoor Unitary Equipment

1.06 SUBMITTAL REQUIREMENTS OF THIS SECTION

A. Outdoor Units

B. Indoor Units

PART 2 - PRODUCTS

2.01 APPROVED MANUFACTURERS

A. Mitsubishi

B. Daikin

2.02 MANUFACTURED UNITS

A. Cabinet to be 20-gauge galvanized steel.

B. Fans to be centrifugal type and dynamically balanced.

C. Coil is seamless, copper tubing with aluminum fins mechanically attached.

D. Compressor shall be of the hermetic design.

E. Wall sleeve shall be fully weatherproof for outdoor installation.

F. Refrigerant shall meet the latest EPA requirements.

G. Isolate moving parts from cabinets to reduce noise.

H. Single point electrical connection.

I. Accumulator as required per manufacturer.

J. Unit subbase which includes prewired receptacle, conceals power cord, attaches to wall sleeve, and has leveling legs.

K. Compressor heat shall operate down to 25°F.

2.03 CONTROLS

A. For heat pumps, thermostats to be installed integral to the unit by the equipment manufacturer. Heat pump microprocessor controls shall minimize supplemental electric resistance heat. Compressor heat shall always be first stage. Controls shall indicate the use of supplemental heat with LED indicators. Include all wiring.

PART 3 - EXECUTION

3.01 INSTALLATION

A. General: Install units in locations shown on plans and in accordance with manufacturer's instructions.

B. Piping: Provide condensate piping from unit to outdoors.

C. Unit Protection: Units shall be protected during construction to prevent debris from depositing on the unit.

D. Installation of factory provided refrigerant pipe line sets is acceptable where the entire length of refrigerant pipe run is located above a ceiling unexposed to view. Locations where the refrigerant piping crosses through an exposed space (e.g., open to structure or below a ceiling) other than a mechanical, electrical, elevator machine, server, or telecommunications room, shall use piping, per Section 23 2300.

END OF SECTION

SECTION 23 8145

VARIABLE REFRIGERANT ZONE SYSTEM

PART 1 - GENERAL

1.01 SUMMARY

A. The Variable Refrigerant Zone (VRFZ) system is a heat pump air conditioning system that shall have a variable capacity, heat pump heat recovery, and one outdoor unit shall support multiple indoor units.

1.02 RELATED SECTIONS

A. General Conditions, Division 01

B. Section 20 0000 – General Mechanical Requirements

C. Section 22 1116 – Domestic Water Pipe and Fittings

D. Section 23 0719 – HVAC Piping Insulation

E. Section 23 2300 – Refrigerant Piping System

1.03 QUALITY ASSURANCE

A. The units shall be listed by ETL or UL and bear its label.

B. All wiring shall be in accordance with the National Electrical Code (N.E.C.).

C. The units shall be manufactured in a facility registered to ISO 9001 and ISO14001 which is a set of standards applying to environmental protection set by the International Standard Organization (ISO).

D. The VRFZ system shall be installed by a factory authorized/trained contractor/dealer. Contractor shall be required to submit training certification proof at the request of the Engineer. The mandatory contractor service and install training should be performed by the manufacturer.

1.04 DELIVERY, STORAGE, AND HANDLING

A. Unit shall be stored and handled according to the manufacturer's recommendation.

1.05 WARRANTY

A. The units shall have a manufacturer's warranty for a period of one (1) year from date of installation. The compressor shall have a warranty of six (6) years from date of installation. If, during this period, any part should fail to function properly due to defects in workmanship or material, it shall be replaced or repaired at the discretion of the manufacturer.

1.06 SUBMITTAL REQUIREMENTS OF THIS SECTION

A. Indoor Units

B. Outdoor Units

C. Controls

D. Refrigerant Diagram

E. Branch Connectors

F. Certified Installer Information

1.07 OPERATION AND MAINTENANCE REQUIREMENTS OF THIS SECTION

A. Submittal Data

B. Operation and Maintenance Manual for all Equipment

C. Total Refrigerant in System

PART 2 - PRODUCTS

2.01 APPROVED MANUFACTURER

A. Mitsubishi

B. Daikin

C. LG

D. Trane

E. Lennox

2.02 WALL HUNG INDOOR UNIT

A. General: The indoor unit shall be factory assembled, wired and run tested. Contained within the unit shall be all factory wiring, piping, control circuit board and fan motor. The unit shall have a self-diagnostic function, 3-minute time delay mechanism, an auto restart function, an emergency operation function and a test run switch. Indoor unit and refrigerant pipe will be charged with dry air instead of refrigerant before shipment from factory.

B. Unit Cabinet:

1. The casing shall have a white finish.

2. Multi directional drain and refrigerant piping offering four (4) directions for refrigerant piping and two (2) directions for draining shall be standard.

3. There shall be a separate back plate which secures the unit firmly to the wall.

C. Fan:

1. The indoor fan shall be an assembly with a line-flow fan direct driven by a single motor.

2. The fan shall be statically and dynamically balanced and run on a motor with permanently lubricated bearings.

3. A manual adjustable guide vane shall be provided with the ability to change the airflow from side to side (left to right).

4. The indoor fan shall consist of two (2) speeds, High and Low.

5. Fan motor shall be thermally protected.

6. A motorized air sweep flow louver shall provide an automatic change in air flow by directing the air up and down to provide for uniform air distribution.

D. Filter:

1. Return air shall be filtered by means of an easily removable washable filter.

E. Coil:

1. The indoor coil shall be of nonferrous construction with smooth plate fins on copper tubing.

2. The tubing shall have inner grooves for high efficiency heat exchange.

3. All tube joints shall be brazed with phoscopper or silver alloy.

4. The coils shall be pressure tested at the factory.

5. A condensate pan and drain shall be provided under the coil.

F. Control:

1. This unit shall have a wireless controller to perform input functions necessary to operate the system.

2. The controller shall consist of a Power On-Off switch, Mode Selector, Temperature Setting, Timer Control, Fan Speed Select and Auto Vane selector.

3. The indoor unit shall perform Self-Diagnostic Function, Test Run switching and Check Mode switching.

4. Temperature changes shall be by 2 °F increments with a range of 65 –87 °F.

5. The microprocessor located in the indoor unit shall have the capability of sensing return air temperature and indoor coil temperature, receiving and processing commands from the wireless controller, providing emergency operation and controlling the outdoor unit.

6. The control voltage between the indoor unit and the outdoor unit shall be 12 to 16 volts, DC.

7. The system shall be capable of automatic restart when power is restored after power interruption.

8. Control system shall control the continued operation of the air sweeplouvers, as well as provide on/off and system/mode function switching.

2.03 FAN COIL INDOOR UNIT

A. General: The indoor unit shall be factory assembled, wired and run tested. Contained within the unit shall be all factory wiring, piping, electronic modulating linear expansion device, control circuit board and fan motor. The unit shall have a self-diagnostic function, 3-minute time delay mechanism, and an auto restart function. Indoor unit and refrigerant pipes shall be charged with dehydrated air before shipment from the factory.

B. Unit Cabinet:

1. The cabinet shall be space saving, low profile, ceiling concealed, ducted.

2. The cabinet panel shall have provisions for a field installed mixing box.

C. Fan:

1. The indoor unit fan shall be an assembly with one or two fan(s) direct driven by a single motor.

2. The indoor fan shall be statically and dynamically balanced to run on a motor with permanently lubricated bearings.

3. The indoor fan shall consist of two (2) speeds, High and Low, which are selectable on the room controller.

4. The indoor unit shall have a ducted air outlet system and ducted return air system.

5. The fan motor shall be thermally protected.

D. Coil:

1. The indoor coil shall be of nonferrous construction with smooth plate fins on copper tubing.

2. The tubing shall have inner grooves for high efficiency heat exchange.

3. All tube joints shall be brazed with phos-copper or silver alloy.

4. The coils shall be pressure tested at the factory.

5. A condensate pan and drain shall be provided under the coil.

6. The condensate shall be gravity drained from the fan coil.

E. Controls:

1. This unit shall use controls provided by manufacturer to perform functions necessary to operate the system.

2.04 RECESSED CEILING – INDOOR UNIT

A. General: The indoor unit shall be factory assembled, wired and run tested. Contained within the unit shall be all factory wiring, piping, electronic modulating linear expansion device, control circuit board and fan motor. The unit shall have a self-diagnostic function, 3-minute time delay mechanism, an auto restart function, an emergency operation function ceiling – recessed cassette, and a test run switch. Indoor unit and refrigerant pipes shall be charged with dehydrated air before shipment from the factory.

B. Unit Cabinet:

1. The cabinet shall be space saving.

2. Grille shall be fixed to bottom of cabinet allowing one, two, three or four-way blow, as indicated on plans.

C. Fan:

1. The indoor unit fan shall be an assembly with a turbo fan direct driven by a single motor.

2. The indoor fan shall be statically and dynamically balanced to run on a motor with permanently lubricated bearings.

3. The indoor fan shall consist of four (4) speeds, Low, Mid1, Mid2, and High, which are selectable on the room controller.

4. The auto airswing vanes shall be capable of automatically swinging up and own for uniform air distribution.

D. Coil:

1. The indoor coil shall be of nonferrous construction with smooth plate fins on copper tubing.

2. The tubing shall have inner grooves for high efficiency heat exchange.

3. All tube joints shall be brazed with phos-copper or silver alloy.

4. The coils shall be pressure tested at the factory.

5. A condensate pan and drain shall be provided under the coil.

6. The condensate lift mechanism shall be able to raise drain water 33 inches above the condensate pan.

7. Return air shall be filtered by means of a long-life washable permanent filter.

E. Controls:

1. This unit shall use controls provided by manufacturer to perform functions necessary to operate the system.

2.05 OUTDOOR UNIT

A. General: The outdoor unit is designed specifically for use with the indoor units. These units are equipped with a circuit board that interfaces to the indoor unit and perform all functions necessary for operation. The unit must have a powder coated finish. The outdoor unit shall be completely factory assembled, piped and wired. Each unit must be run tested at the factory. Unit shall be capable of operating at 0ºF and above. The system will automatically restart operation after a power failure and will not cause any settings to be lost.

B. Unit Cabinet:

1. The casing shall be fabricated of galvanized steel, bonderized and finished with a powder coated baked enamel.

C. Fan:

1. The unit shall be furnished with direct drive, variable speed propeller type fans.

2. The motor shall have inherent protection, be permanently lubricated bearings and be completely variable speed.

3. The fan motor shall be mounted for quiet operation.

4. The fan shall be provided with a raised guard to prevent contact with moving parts.

5. The outdoor unit shall have vertical discharge airflow.

D. Coil:

1. The condenser coil shall be of nonferrous construction with lanced or corrugated plate fins on copper tubing.

2. The coil shall be protected with an integral metal guard.

3. Refrigerant flow from the outdoor unit shall be controlled by means of an inverter driven compressor.

E. Compressor:

1. The compressor shall be one inverter driven, modulating capacity scroll compressor, and one scroll compressor. Variable capacity down to 16% of rated capacity.

2. The outdoor unit shall have an accumulator.

3. The compressor will be equipped with an internal thermal overload.

4. The compressor shall be mounted to avoid the transmission of vibration.

5. Provide crankcase heater.

F. Electrical:

1. The outdoor unit shall be controlled by the microprocessor located in the indoor unit and outdoor unit.

2. The control voltage between the indoor unit and the outdoor unit shall be 12 to 16 volts, DC.

G. Refrigerant:

1. R410A shall be required for outdoor unit systems.

2.06 BRANCH SELECTOR (BS) BOX

A. General:

1. BS box shall be factory assembled, wired, and piped.

2. BS box must be run tested at the factory.

3. BS box must be mounted indoors.

B. Unit Cabinet:

1. Units shall have a galvanized steel plate casing.

2. Each cabinet shall house multiple refrigeration control valves and a liquid gas separator.

3. The cabinet shall contain a tube in tube heat exchanger.

4. The unit shall have sound absorption thermal insulation material made of flame and heat resistant foamed polyethylene.

C. Refrigerant Valves:

1. The unit shall be furnished with 5 electronic expansion valves to control the direction of refrigerant flow.

2. The refrigerant connections must be of the braze type.

D. Condensate Removal:

1. The unit shall not require provisions for condensate removal.

2.07 BRANCH CIRCUIT (BC) CONTROLLERS

A. The BC (Branch Circuit) Controllers shall be equipped with a circuit board that interfaces to the manufacturer's controls system and shall perform all functions necessary for operation. The BC Controller shall completely factory assembled, piped and wired. Each unit shall be run tested at the factory.

B. BC Unit Cabinet:

1. The casing shall be fabricated of galvanized steel.

2. Each cabinet shall house a liquid-gas separator and multiple refrigeration control valves.

3. The unit shall house two tube-in-tube heat exchangers.

C. Refrigerant Valves:

1. The unit shall be furnished with multiple two position refrigerant valves.

2. Each circuit shall have one (54,000 Btu/h or smaller indoor unit section) two-position liquid line valve and a two-position suction line valve.

3. Linear electronic expansion valves shall be used to control the variable refrigerant flow.

D. Integral Drain Pan:

1. An integral condensate pan and drain shall be provided.

E. Electrical:

1. The BC Controller shall be controlled by integral microprocessors.

2. The control circuit between the indoor units and the outdoor unit shall be 12 VDC completed using a 2-conductor, twisted pair shielded cable to provide total integration of the system.

2.08 REFRIGERANT PIPE

A. See Section 23 2300 – Refrigerant Piping System.

2.09 REFRIGERANT PIPE INSULATION

A. See Section 23 0719 – HVAC Piping Insulations.

2.10 CONTROLS

A. VRFZ authorized dealer shall install VRFZ system controls and wiring. Authorized dealer shall provide and install complete LONWORKS interface including dedicated LMAPS or BACNET interface including dedicated PC and permanent license BACNET gateway software.

B. VRFZ authorized dealer shall coordinate interface and EMCS graphics with EMCS Contractor.

PART 3 - EXECUTION

3.01 INSTALLATION

A. Install indoor unit per manufacturer's recommendations.

B. Install outdoor unit per installation detail on plans.

C. Support refrigerant pipe per Section 23 0529 – Hangers and Supports for HVAC Piping and Equipment.

END OF SECTION

SECTION 23 8239

ELECTRIC HEATERS

PART 1 - GENERAL

1.01 SUMMARY

A. Includes but not limited to: Furnishing and installing specified material as described in the Contract Documents.

B. Related Sections:

1. General Conditions and Division 1 apply to this section.

2. Section 20 0000 – General Mechanical Requirements.

1.02 QUALITY ASSURANCE

A. Units to be UL listed.

B. Shall conform to NEC and NFPA requirements.

1.03 SUBMITTAL REQUIREMENTS OF THIS SECTION

A. Electric Heaters

1.04 OPERATION AND MAINTENANCE REQUIREMENTS OF THIS SECTION

A. Operation and Maintenance Manual

PART 2 - PRODUCTS

2.01 APPROVED MANUFACTURERS

A. Not Applicable

2.02 FAN FORCED WALL HEATERS

A. Provide recess mounting in stud wall and surface mounting in block wall unless otherwise stated on plans.

B. 20-gauge minimum sheet metal casing.

C. Heating element shall be encased in steel finned casting and protected by thermal switch.

D. Fan motor shall be heavy duty enclosed and permanently lubricated.

E. Fan shall be precision balanced and fan motor assembly mounted to be vibration free.

F. Units shall be controlled automatically by integral thermostat when heater is in “ON” position unless otherwise stated on plans.

G. Heater shall have built-in fan delay.

H. Finish shall be baked-on enamel.

I. Bi-metallic limit turns the element off when an over temperature condition occurs. Automatically resets when the normal temperature returns.

J. Approved Manufacturers:

1. Berko

2. King

3. Markel

2.03 UNIT HEATERS

A. Furnace shall be factory assembled unit, with blower, heaters, steel casing and completely wired.

B. Cabinet: 22-gauge minimum cold rolled steel with baked enamel finish. Interior of cabinet around electric heating elements shall be lined with ½ inch thick 1-1/2 lb density fiberglass insulation.

C. Blower:

1. Propeller type, dynamically and statically balanced.

2. Unit shall be direct drive.

D. Heaters:

1. High mass, all steel finned and tubular heating element.

2. Each set of heaters shall be equipped with limit control with fixed temperature “OFF” setting and automatic reset with supplemental thermal cut-off safety fuses.

3. Provide fan time delay relay and circuit breakers.

4. Furnaces shall have manually reset transformer.

E. Approved Manufacturers:

1. Indeeco

2. Lennox

3. Markel

4. Trane

2.04 DUCT HEATERS

A. Heaters:

1. Eighty (80%) percent nickel, 20% chromium resistance coils insulated by floating ceramic bushings and supported in an aluminized steel frame.

2. Bushing shall be recessed into embossed openings and staked into supporting brackets spaced 3-1/2 inches maximum center to center.

3. Coils shall be machine crimped into stainless steel terminals and insulated with phenolic bushings.

4. Heaters shall be listed by UL for zero clearance to combustible surfaces.

5. Heater casings shall be of flanged type for attachment to external duct flanges and shall be made to accommodate internally insulated ducts with insulation thickness as specified.

B. Furnish disc-type thermal cutouts for primary and secondary protection.

1. Automatic reset primary cutout shall be suitable for scheduled voltage operation.

2. Manual reset secondary cutouts shall be factory wired directly in series with each circuit.

3. Non-reusable thermal links are not acceptable.

C. Voltage, phase and number of heating stages to be furnished are shown on Drawings. Limit step controller to eight steps.

1. Three phase heaters shall have equal, balanced circuits.

2. Circuits shall be rated at 48-amps maximum.

3. Heating elements shall be de-rated to 35-watts per sq. ft. of element surface.

4. Test heaters di-electrically at 2,000 volts before shipments.

D. Each heater shall have following built-in components which shall be wired to terminal blocks for field connections. Internal wiring shall be suitable for 105°C.

1. Mercury contactors shall disconnect circuits.

2. Control transformer shall be dry industrial type, sized to carry full contactor holding coil load. Primary winding to be factory fused.

3. Door mounted unfused disconnect switch, snap acting, industrial type to be built into access door. Hinged, latched disconnect switch and door cover shall lock in closed position when switch is on.

4. Built-in fuses properly sized complete with fuse block.

5. Air-flow switch wired in series with automatic reset thermal cutout.

6. Provide heaters of 100 KW capacity or greater with recycling relay to prevent all steps from simultaneously energizing after power interception.

E. Approved Manufacturers:

1. Indeeco

2. Trane

3. Markel

2.05 ELECTRIC FURNACES

A. Furnace shall be factory assembled unit, with blower, heaters, steel casing and completely wired.

B. Cabinet: 22-gauge minimum cold rolled sheet with baked enamel finish. Interior of cabinet around electric heating elements shall be lined with ½ inch thick 1-1/2 lb density fiberglass insulation.

C. Blower:

1. Centrifugal type, dynamically and statically balanced.

2. Unit shall be belt driven or direct drive.

3. Direct driven blower shall have a factory installed and wired speed controller providing at least three blower speeds.

D. Heaters:

1. Nickel-chrome and staged.

2. Each set of heaters shall be equipped with limit control with fixed temperature “OFF” setting and automatic reset with supplemental thermal cut-off safety fuses.

3. Provide fan time-delay relay and circuit breakers.

4. Furnaces shall have manually reset transformer.

5. Provide at least two stages.

E. Filter: See Section 23 3300 – HVAC Specialties.

F. Approved Manufacturers:

1. Carrier

2. Lennox

3. Trane

2.06 BASEBOARD HEATER

A. 20-gauge minimum sheet metal casing. 18-gauge front cover. Junction boxes and element hangers to be welded to baseboard case.

B. Heating element shall be encased in steel finned casting.

C. Continuous sensor to extend the full length of the baseboard for thermal protection. Shall automatically reset after tripping when normal temperature returns.

D. Finish shall be baked-on enamel.

E. Manufacturers:

1. King

2. Markel

2.07 CEILING RADIANT HEATING PANELS

A. Face to be white finish.

B. Provide surface mount kit as indicated on equipment schedule. Surface mount trim color to be as selected by Architect.

C. Furnish thermostat kit.

D. Provide with clear, Lexan thermostat guard.

E. Approved Manufacturer:

1. Aztec

PART 3 - EXECUTION

Not Applicable

END OF SECTION

SECTION 26 0000

ELECTRICAL GENERAL CONDITIONS

PART 1 - GENERAL

1.01 GENERAL

A. Conform to the General Conditions, Supplementary Conditions, and related work in other Divisions for all work in Divisions 26, 27, and 28. See Division 01 for sequence of work.

1.02 WORK INCLUDED

A. It is the intention of this division of the specifications and the accompanying drawings to describe and provide for the furnishing, installing, testing and placing in satisfactory and successful operation all equipment, materials, devices, and necessary appurtenances to provide a complete electrical system, together with such other miscellaneous installations and equipment hereinafter specified and/or shown in the plans. The work shall include all materials, appliances and apparatus not specifically mentioned herein or noted on the plans, but which are necessary to make a complete working installation of all electrical systems shown on the plans or described herein. Equipment and devices furnished and installed under other divisions of this specification (or by the Owner) shall be connected under this division. The drawings and specifications are complementary and what is called for in either is binding as if called for in both.

B. By submitting a bid, the Contractor is acknowledging that he has made a thorough examination of the Contract Documents, existing site and building conditions, and has determined that these documents do sufficiently describe the scope of construction work required under this Contract.

1.03 SCOPE OF BASIC BID

A. Included in Divisions 26, 27, and 28 is all work and related items necessary to provide all electrical installations except as specifically excluded. In general, this includes all labor, equipment, tools, etc., to complete the electrical work.

1.04 RELATED WORK

A. Temporary Power and Lighting - See Section 01 5100

B. Mechanical Control Wiring – See Division 23

C. Cutting and Patching - See Division 01

D. Trenching, backfill and asphalt work – See Division 02.

1.05 STANDARDS AND REGULATIONS

A. The work shall comply with the latest edition of the applicable Standards and Codes of the following:

ASTM	American Society for Testing and Materials
NBFU	National Board of Fire Underwriters
NEC	National Electrical Code
---	State Electrical Code
NESC	National Electrical Safety Code
NEMA	National Electrical Manufacturers Association
NFPA	National Fire Protection Association
U.L.	Underwriters Laboratories Inc.
IPCEA	Insulated Power Cable Engineers Associated
CBM	Certified Ballasts Manufacturers
---	Federal, State and Local Building Codes
ETL	Electrical Testing Laboratories

B. If any conflict occurs between Government adopted Code Rules and this specification, the codes are to govern. Nothing in these drawings and specifications shall be construed to permit work not conforming with governing codes. Also, this shall not be construed as relieving the Contractor from complying with any requirements of the plans and specifications which may be in excess of, but not in conflict with, requirements of the Governing Codes.

1.06 PERMITS & FEES

A. The Contractor shall obtain and pay for all licenses, permits, and inspections required by laws, ordinances, and rules governing work specified herein. The Contractor shall arrange for inspection of work by the inspectors and shall give the inspectors all necessary assistance in their work of inspection.

B. The Contractor shall consult with and follow the requirements of the local fire, power, telephone, and television utilities serving the area and shall coordinate the work with them.

C. Utility connection and hook-up charges for power, telephone, and television shall be paid by the Owner directly to the utility. The Electrical Contractor is required to provide any and all coordination necessary to support the utility connection, file for application of service (or assist the Owner in filing for application of service) and coordinate dates for service with the utilities.

D. This project has utilized the electronic plan review submittal process for the applicable jurisdiction. The engineer will make available to the contractor an electronic version of the Approved Plans in PDF format on a USB thumb drive. The contractor shall include in their bid all costs associated with printing the plans, full size and in color, as required by the local Electrical Inspector.

1.07 DEFINITIONS

A. When "provide" is used, it shall be interpreted as "furnishing and installing complete in operating condition".

B. When "drawings" is used, it shall be interpreted as "all Contract Drawings for all disciplines".

C. When "Contractor" is used, it shall be interpreted as the Electrical Contractor.

1.08 INTENT OF DRAWINGS

A. The electrical drawings are intended to serve as working drawings for general layout. The equipment layout is diagrammatic and, unless specifically dimensioned or detailed, does not indicate all fittings, hardware, or appurtenances required for a complete operating installation.

B. Anything shown on the drawings but not covered in the specifications, or anything covered in the specifications but not shown on the drawings, shall be as if covered in both. In case of conflict between the drawings and specifications, the Engineer will select the method to be used. The Contractor shall be responsible for verifying all measurements before proceeding with the work.

C. Wiring diagrams are not intended to indicate the exact course of raceways or exact location of outlets. Raceway and outlet locations are approximately correct and are subject to revision as may be necessary or desirable at the time of installation. Precise location in every case shall be subject to the Engineer's approval.

1.09 PROTECTION

A. The Contractor shall store and guard all equipment before installation and shall protect same, and replace any equipment that has been damaged prior to final acceptance. See Division 01 for detailed requirements.

1.10 HOUSEKEEPING

A. All electrical materials shall be kept stored in an orderly fashion protected from heat, cold, and the weather.

B. All marred surfaces shall be refinished and painted after installation.

C. All debris shall be removed from premises during work, as directed, and at completion of job.

1.11 TEMPORARY USE

A. Temporary or interim use of any and all portions of the electrical system shall be under the supervision of the Electrical Contractor.

B. Temporary power and lighting for use during construction shall be provided per the requirements of the Division 01 specifications.

1.12 AS-BUILT DRAWINGS

A. The Contractor shall maintain, in addition to any reference drawings, an as-built set of prints, on which all deviations from the original design shall be drafted in a neat, legible manner with red colored pencil. This red-lined set shall identify all drawing revisions including addenda items, change orders, and Contractor revisions. The Contractor is responsible to revise panel schedules and load calculations as required.

B. Drawings shall show locations of all concealed raceway runs larger than 1", giving the number of conductors and size of raceway. Underground ducts shall be shown with cross section elevations. All pipe, raceway, manholes or lines of other trades shall be included.

C. The Contractor shall update all references to specific products to indicate products actually installed on project. This shall include, but not be limited to, lighting fixtures, baseboard heaters, etc.

D. Upon completion of the Division 26 work, the Contractor shall deliver the red-lined drawings and one (1) set of neatly marked up as-built drawings to the Engineer for transmittal through the Engineer to the Owner.

D. Upon completion of the Division 26 work, the Contractor shall deliver the red-lined drawings and one set of neatly drafted as-built drawings on electronic media in AutoCAD R-2013 format and full-size PDF to the Engineer for transmittal through the Engineer to the Owner.

E. See Section 27 0000 for additional requirements of low voltage systems.

1.13 WARRANTY

A. Provide a written warranty that the Division 26, 27, and 28 work is free from mechanical and electrical defects. Contractor shall replace and repair, to the satisfaction of the Engineer, any parts of the installation which may fail within a period of 12 months after the certificate of final acceptance *or* date of substantial completion, provided that such failure is due to defects in material or workmanship, or failure to follow the specifications and drawings.

B. See Section 27 0000 for additional requirements of low voltage systems.

1.14 INSTRUCTIONS AND MANUALS

A. Operation and maintenance data shall be submitted in accordance with Section 01 7823.

A. A preliminary copy, complete except for the bound cover, shall be submitted 60 days prior to completion of the project for checking and review. Five (5) bound, corrected copies shall be delivered to the Owner 20 days prior to scheduled instruction periods as specified under Section 1.16 "Instruction Periods" after review of the preliminary copy. Obtain a receipt for the manuals and forward a copy of the receipt to the Engineer with the completed form.

B. Manuals shall contain shop drawings, wiring diagrams, operating and maintenance instructions, replacement parts lists, and equipment nameplate data for all equipment and systems installed under the project. Signal equipment submittals shall contain step-by-step circuit description information designed to acquaint maintenance personnel with equipment operation in each mode of operation. Manuals shall contain original brochures supplied by manufacturers. Copies of originals will not be accepted.

C. Each type of device provided shall be identified in the O & M Manual using the same identification as shown on the drawings and specifications. The information included must be the exact equipment installed, not the complete "line" of the manufacturer. I Installed equipment shall be neatly and clearly identified on sheets where both installed equipment and other equipment are shown. Parts lists shall give full ordering information assigned by the original parts manufacturer. Relabeled and/or renumbered parts information as reassigned by equipment supplier are not acceptable. The following information shall be provided for each device:

1. Manufacturer’s name, address, and phone number.

2. Local supplier's name, address, and phone number.

3. Complete parts lists including quantities and manufacturer's part numbers.

4. Installation instructions.

5. Recommended maintenance items including maintenance procedure and recommended interval of maintenance listed in hours of operation, calendar unit or other similar time unit.

D. The O & M Manual shall be assembled as detailed in Section 01 7000. As a minimum, the following sections shall be broken out:

D. The O & M Manual shall be assembled in a loose leaf, 3-ring, hard cover binder and electronically on compact disc. The information contained in the manuals shall be grouped in an orderly arrangement by specification index. The manuals shall have a typewritten index and divider sheets between categories with identifying tabs. The covers shall be imprinted with the name of the job, Owner, Architect, Electrical Engineer, Division 26 Contractor, and year of completion. The back edge shall be imprinted with the name of the job, Owner, and year of completion. As a minimum, the following selection shall be broken out:

1. Light Fixtures

2. Lamps and Ballasts - referenced to each fixture type

3. Panelboards, Switchgear, and Transformers

4. Motor Controls

5. Fire Alarm System

6. Intrusion Alarm

7. Access Control System

8. CCTV

9. Intercom/Clock/Program

10. Telecommunication System

11. Television System

12. Audio/Visual Presentation Systems

13. Theatrical Lighting

14. Sound Systems

15. Low Voltage Lighting Control Systems

16. Surge Protection Device (SPD)

17. Data Network

18. Generator & ATS

19. Uninterruptible Power Supply System

20. Electrical System Protective Device Study

21. Ground Fault Testing Results

E. Wiring Diagrams for each system shall be complete for the specific system installed under the Contract. "Typical" line diagrams will not be acceptable unless properly marked to indicate the exact field installation.

1.15 WORK NOT INCLUDED

A. Indicated motors, controls, and equipment as described in other divisions shall be furnished by other trades, but shall be moved, set, and wired to electrical controls and power supply by the Electrical Contractor.

B. Work to be included under this Contract shall be defined on drawings and in these specifications. Any details beyond these limits are meant only to give installation clarity to that portion which is a part of this Contract.

1.16 INSTRUCTION PERIODS

A. Upon completion of the work and after all tests and final inspection of the work by the authority(ies) having jurisdiction, the Contractor shall demonstrate and instruct the Owner's designated operation and maintenance personnel in the operation and maintenance of the various electrical systems. The Contractor shall arrange scheduled instruction periods with the Owner. The Contractor's representatives shall be superintendents or foremen knowledgeable in each system and suppliers' representatives when so specified.

B. Scheduled Instruction periods shall be:

1.	Access Control System	1/2 day
2.	CCTV System	1/2 day
3.	Data Network	1/2 day
4.	Daylighting Control Systems	1/2 day
5.	Fire Alarm System	1/2 day
6.	Generator Systems	1/2 day
7.	Intercom/Clock/Program System	1/2 day
8.	Low Voltage Lighting Control Systems	1/2 day
9.	Security System	1/2 day
10.	Sound Systems	1/2 day
11.	Television System	1/2 day
12.	Uninterruptible Power Supply System	1/2 day

C. Costs for time involved by Contractor shall be included in the bid.

1.17 COMPLETION OF WORK

A. Upon completion of the Division 26, 27, and 28 work, the Contractor shall comply with requirements of Section 01 7000 for project closeout.

A. Upon completion of the Division 26, 27, and 28 work, the Contractor shall deliver to the Engineer a completion letter stating that all of the requirements of the Contract for Divisions 26, 27, and 28 work have been fulfilled as set forth in the drawings and specifications and that all items in pre-final inspection lists submitted by the Engineer have been satisfactorily completed.

B. Arrange for and obtain all required inspections and certificates pertaining to the Division 26, 27, and 28 work and deliver the certificates to the Engineer in triplicate.

C. Prior to or at the time of final inspection, the Contractor shall, as outlined in detail in the specifications, complete the delivery of all the following items:

1.	Completion Letter	
2.	Certificate of Final Inspection. Electrical Inspector Fire Department	COMPLETION OF WORK - 26 0000 – 1.17
3.	Warranty to Owner (with copy for Engineer)	SUPPLEMENTARY GENERAL CONDITIONS – 26 0000 – 1.13
4.	Marked Set of As-Built Electrical Drawings	GENERAL AS-BUILT DRAWINGS 26 0000 – 1.12
5.	Marked Set, Electronic Media Set on Solid-State Drive-in AutoCAD R-2013 Format, and full-size PDF of As-Built Electrical Drawings	GENERAL AS-BUILT DRAWINGS 26 0000 – 1.12
6.	Certificate of Completion and Document Requirements for Protective Device Study	ELECTRICAL SYSTEM PROTECTIVE DEVICE STUDY – 26 0573
7.	Motor Current Readings	GENERAL, TESTS – 26 0519 – 3.03(D)
8.	Phase Current Readings	GENERAL, TESTS – 26 0519 – 3.03(E)
9.	OHMIC Test Readings	GENERAL, TESTS – 26 05 9 – 3.03(B)
10.	Ground Fault Settings	
11.	Panelboard and Special Equipment Shop Drawings and Final Approved List of Materials Installed	MATERIALS, GENERAL – 26 0000 – 2.03
12.	Certificate of Feeders Torque Results	WIRES AND CABLES – 26 0519

13.	* Receipt from person to whom delivered the following spare glasses, plastic diffusers, lamps, and ballast fuses.	LIGHTING FIXTURES – 26 5000
14.	* Receipt from person to whom delivered the following: Spare Elements for Fire Detectors, Fuses for Switches, Spare Keys for Panelboards, receptacles switches, plugs, etc.	LOW VOLTAGE – 27 00 0 FIRE ALARM – 28 3100 FUSES – 26 2813 PANELBOARDS – 26 24 16 SWITCHES & RECEPTACLES – 26 2726 ELECTRICAL MEDIUM VOLTAGE SERVICE UNDERGROUND AND PAD-MOUNTED LOAD BREAK SWITCH – 26 0513
15.	Wiring diagrams, Maintenance Manuals, Operation Instructions, and Brochures (5 sets minimum)	GENERAL, INSTRUCTIONS & MANUALS – 26 0000 – 1.14

* Secure delivery instructions from Architect for delivery to Owner.

1.18 SHOP DRAWING SUBMITTALS

A. This Contractor shall submit to the Architect as described in Section 01 6000. When shop drawings are submitted electronically, they shall be submitted as described in Paragraph B below.

B. The Contractor shall submit to the Architect no later than 30 days after the award of the Contract, a minimum of seven (7) copies, each bound under separate cover, with index, detailed shop drawings to include:

1. Manufacturer's Catalog Data.

2. Complete Physical and Technical Data.

3. Wiring Diagrams.

4. Detailed Reference (written or highlighted) noting compliance with the appropriate specification section and applicable item numbers within that section.

5. Other Descriptive Data as required by the Architect/ Engineer.

C. The Contractor shall submit to the Architect electronic shop drawings in PDF format. Electronic Shop Drawings that are submitted without following the format as outlined below will be returned for corrections without any further review.

1. A separate PDF file shall be submitted for each Division including All submittal items for that Division as outlined below:

a. Division 25 – Integrated Automation

b. Division 26 – Electrical

c. Division 27 – Telecommunications

d. Division 28 – Electronic Safety and Security

2. The contractor shall provide either a digital or hardware method of transporting the electronic submittal to the Architect. Files larger than 10Megabytes shall not be sent via email and shall be transferred via a file transfer protocol, PC compatible CD or PC compatible thumb drive. Divisions shall not be broken up into separate files for transfer via email.

3. Each Specification PDF shall be submitted with the following format and salient attributes:

a. Cover page including:

1) Project Title as indicated on the plans

2) Project Location including address, city, state, country

3) Prime Contractor name, phone number, and email address

4) Sub-Contractor name, phone number, and email address

5) Specification Division number and title

b. Index Page outlining each specification section included in the submittal. This list shall be linked to a corresponding Specification Section Divider for each section. This link shall enable the reviewer to jump to a specification section by clicking the item in the list.

c. Specification Section Divider: Shop Drawings shall be divided by specification section and each section shall begin with a divider page outlining the Specification number, title, and a list of submittal items for the section. In the upper right-hand corner of the divider page, a link shall be provided returning the reviewer to the Index Page.

d. Each Submittal Item listed on the Specification Section Divider shall be linked to the specific item being submitted. Each Submittal Item shall be highlighted yellow with a note reference to the specific paragraph giving the submittal requirements.

e. Each page of the submittal shall be numbered in the bottom right corner of the page. Page numbering shall be Roman numerals for all pages before the First Specification Section. Each Specification Section page shall be numbered with the Specification Section number, a dash, and the page number in the Specification Section.

f. Specification items shall be specifically highlighted as they apply to the project rather than highlighting an entire product family. Items that do not apply to this project shall be crossed out with a red “X”.

g. The PDF file shall not be protected to prevent printing, selecting of text within the document, or extracting of pages from the document.

D. Shop drawings shall be submitted complete, at one time, and with each item indexed with dividers and separated per specification section and shall include, at a minimum, the items of equipment listed below:

1. All panelboards, showing breaker arrangement with circuit numbers, relays, and panel skirts.

2. Motor starters and controls designating where items are intended to be used and equipment being controlled.

3. Transformers (Dry Type)

4. Surge Protection Device

5. Disconnect Switches

6. Fuses and spare fuse cabinet

7. Electrical System Protective Device Study

8. Lighting Fixtures (Complete)

9. Lighting Fixture Lamps and Ballasts referenced to fixture types

10. Low Voltage Lighting Control Systems

11. Wiring Devices

12. Back Boxes

13. Coverplates

14. Raceways and Connectors

15. Fire Wall Penetration Seals

16. Cable Tray

17. Copper Wire

18. Aluminum Wire

19. *Fire Alarm System

20. *Security System

21. *CCTV

22. *Access Control System

23. *Telecommunication System

24. *Intercommunication/Clock/Program System

25. *Sound Systems

26. *Audio/Visual Presentation Systems

27. *Data Network Systems

28. Theatrical Lighting

29. Transformers (Oil Filled)

30. 15KV Cable

31. Primary Switches

32. Automatic Transfer Switches

33. Generator System

34. **All Specialty Systems not listed above**

35. Any other items requested by Engineer.

*See Section 27 0000 for further requirements.

E. Within ten (10) working days after the date of the letter rejecting any items of equipment, lighting fixtures, or materials as not in accordance with the specifications, the Contractor shall submit a new list of items to furnish and install in place of those items rejected. If the Contractor fails to submit this new list within the above specified time, or if any items on this second list are rejected as not being in accordance with these specifications, the Engineer may select the items which the Contractor shall furnish and install without change in Contract price or time of completion.

F. The acceptance of a manufacturer's name or product by the Engineer does not relieve the Contractor of the responsibility for providing materials and equipment which comply in all details with the requirements of the Contract Documents. The Contractor shall be solely responsible for submitting materials at such a time to allow a minimum of two weeks for Engineer's review.

G. Electrical Drawings for the project have been developed by the Engineer using AutoCAD Revision 2013 software or newer. These drawing files will be made available to the Contractor for development of shop drawings and/or As-Builts with a signed waiver of responsibility.

1.19 SCHEDULE OF VALUES

A. Provide Schedule of Values per Division 01 and related project requirements.

B. Divisions 26, 27, and 28 Breakdown: Provide schedule of values for the following categories (as a minimum):

1. Electrical Mobilization
2. Electrical Submittals
3. Electrical General Project Management, General Design, General Coordination
4. Branch Circuit Materials Rough-in
5. Branch Circuit Materials Rough in – Labor
6. Branch Circuit Trim – Materials
7. Branch Circuit Trim – Labor
8. Service Materials
9. Service Materials – Labor
10. Feeder Materials
11. Feeder Materials - Labor
12. Panelgear, Disconnects, Starters
13. Panelgear, Disconnects, Starters – Labor
14. Light Fixtures
15. Light Fixtures – Labor
16. *Intercom/Clock System
17. *Distributed Audio-Video Communication System
18. *Classroom Audio-Visual Systems
19. *Closed Circuit Television System (CCTV)

20. *Sound Systems – Break out per space

21. *Fire Alarm/Emergency Communication System

22. *Security System

23. *Data System

24. Generator and Transfer Switches

25. Electrical System Protective Device Study

26. Commissioning

27. Electrical Punchlist, Closeout, and Owner Training

*Provide engineering/shop drawings, material, and labor for each system. Engineering/shop drawings shall be 10% of the labor and material value.

C. The dollar value for "Electrical Punchlist, Closeout, and Owner Training" shall in no case be less than 2% of the total dollar value of the Division 26, 27, and 28 work (or as indicated in Division 01, whichever is higher). The dollar value for "Commissioning" shall in no case be less than 3% of the total dollar value of the Division 26 work (or as indicated in Division 01, whichever is higher).

D. The Contractor is advised that in addition to payments held out for retainage and project final completion (i.e. "Electrical Punchlist, Closeout, and Owner Training"), as specified above and in Division 01, the Owner reserves the right to withhold 10% of the funds for any of the above categories until the systems (of that category) have been proven to operate as specified and have been completely tested and adjusted.

PART 2 - PRODUCTS

2.01 COMPETITIVE PRODUCTS

A. Any reference in the specifications to any article, device, product, material, fixture, form, or type of construction by name, make, or catalog number shall be interpreted as establishing a standard of quality and shall not be construed as limiting competition. The Contractor, in such cases, may use any article, device, product, material, fixture, form, or type of construction which in the judgment of the Engineer, expressed in writing, is equal to that specified. However, any manufacturer not listed as an accepted bidder for a specific item must be submitted for acceptance in writing in accordance with Section 01 6000.

A. Any reference in the specifications to any article, device, product, material, fixture, form, or type of construction by name, make, or catalog number shall be interpreted as establishing a standard of quality and shall not be construed as limiting competition. The Contractor, in such cases, may use any article, device, product, material, fixture, form, or type of construction which in the judgment of the Engineer, expressed in writing, is equal to that specified. However, any manufacturer not listed as an accepted bidder for a specific item must be submitted for acceptance in writing and with descriptive data verifying equal quality and performance at least ten (10) working days prior to the bid date for approval.

2.02 MANUFACTURER/EQUIPMENT PRIOR APPROVALS

A. Any manufacturer/equipment not listed as an approved substitute for a specified item must be submitted for acceptance in accordance with Section 01 6000, in writing, with detailed information to include:

1. Manufacturer's Catalog Data

2. Complete Physical and Technical Data

3. Wiring Diagrams

4. Detailed reference (written or highlighted) noting compliance with the appropriate Specification Section and all applicable Specification item numbers within that Section

5. Complete type written index cross referencing all proposed substitutes and specified items

6. Detailed reference to specified items (written or highlighted) noting equal quality and performance of proposed substitute equipment

7. Other descriptive data, as required by the Engineer

B. If substitute material is determined to be acceptable by the Engineer, it will be included in a subsequent Addenda prior to bidding. The acceptance of a manufacturer’s name or product by the Engineer does not relieve the Contractor of the responsibility for providing materials and equipment which comply in all details with the requirements of the Contract Documents.

C. Only materials which are specified or published in addenda as acceptable shall be used.

2.03 MATERIALS

A. All materials must be of the quality herein specified. All materials shall be new, of the best quality, and free from defects. They shall be designed to ensure satisfactory operation and operational life in the environmental conditions which will prevail where they are being installed.

B. Each type of material shall be of the same make and quality. The materials furnished shall be standard products of the manufacturers regularly engaged in the production of such equipment and shall be the manufacturer's latest standard design.

C. All materials shall be U.L. or E.T.L. listed for the purpose for which they are used.

D. Equipment in compliance with U.L. standards but not bearing their label is not acceptable. If the manufacturer cannot arrange for labeling of an assembled unit at the factory the unit shall be field evaluated per the Washington State Administrative Code (WAC) and the electrical inspector's requirements.

2.04 COMPLETE SYSTEM

A. All the systems mentioned shall be complete and operational in every detail except where specifically noted otherwise. Mention of certain materials in these specifications shall not be construed as releasing the Contractor from furnishing such additional materials and performing all labor required to provide a complete and operable system.

2.05 NAMEPLATES

A. Provide nameplates constructed of plastic (black on white) laminated material engraved through black surface material to white sublayer (attach with screws on NEMA 1 enclosures). EXCEPTION (1): Emergency distribution system component labeling - white letters on red background. Exception (2): Series rated systems shall be yellow background with white letters.

1. Service Entrance Label: Refer to Section 26 2413.

2. Panelboard Labels: Refer to Section 26 2416.

3. Switch and Receptacle Labels: Refer to Section 26 2726.

4. Motor Starter and Disconnect Labels: Refer to Section 26 2816.

5. Special Equipment/Outlet Labels: Refer to Appropriate Sections.

6. Medium Voltage Feeder Tags: Refer to Section 26 0573.

7. Under 600 Volt Feeder Tags: Refer to Section 26 0519.

PART 3 - EXECUTION

3.01 GENERAL

A. Careful consideration shall be given to clearances under and over beams, pipes and ducts, to provide proper headroom in all cases. Check drawings to determine heights of all suspended ceilings and size of pipe shafts where raceway and wire-ways shall run. Coordinate installation of Divisions 26, 27, and 28 wiring and equipment with Division 23 and other trades. Where insufficient room for proper installation appears, obtain clarification from Engineer before any installation begins.

B. Cutting and Patching:

1. Obtain permission from the Architect and/or Owner's Representative prior to cutting. Locate cuttings so they will not weaken structural components. Cut carefully and only the minimum amount necessary. Cut concrete with diamond core drills except where space limitations prevent the use of such drills.

2. All construction materials damaged or cut into during the installation of this work must be repaired or replaced with materials of like kind and quality as original materials by skilled labor experienced in that particular building trade.

3.02 COORDINATION

A. The Contractor is responsible for accomplishing work contained within Divisions 26, 27, and 28. The work shall coordinate with that of the other Contractors and/or other trades doing work in the building. The contractor shall examine all drawings, including the several divisions of mechanical, structural, civil and architectural, for construction details and necessary coordination. Specific locations of construction features and equipment shall be obtained from the Contract Documents, field measurements, and/or from the trade providing the material or equipment. No extra costs will be allowed for failure to obtain this information.

B. All conflicts shall be reported to the Engineer in writing before installation for decision and correction. Special attention is called to the following items:

1. Door swings to the end that switches will be located on "Strike" side of the door.

2. Location of grilles, pipes, sprinkler heads, ducts, and other mechanical equipment so that all electrical outlets, lighting fixtures, and other electrical outlets and equipment are clear from and in proper relation to these items.

3. Location of cabinets, counters, and doors so that electrical outlets, lighting fixtures, and equipment are clear from and in proper relation to these items.

4. Type and height of ceiling.

5. All device measurements referenced on drawings or specifications are to be centered of device unless noted otherwise.

C. The Contractor will not be paid for work requiring reinstallation due to lack of coordination or interference with other Contractors or trades. This includes, but is not limited to, removing, replacing, relocating, cutting, patching, and finishing.

D. The Contractor shall review the installation manual for each device to be installed. If a conflict appears to occur between the manufacturer's recommended installation practices and the plans or specifications, notify the Engineer immediately. Final determination shall be by the Engineer. The Contractor will not be paid for reinstallation due to failure to comply with manufacturer instructions or design documents.

E. Device and fixture locations may be changed within 15 feet without extra charge if so desired by the Engineer, before installation.

3.03 REQUESTS FOR INFORMATION (RFI)

A. It is our intent to provide a timely response for RFIs regarding Division 26, 27, and 28 Work. To further expedite this process, where a suggestion can be determined or derived at by the initiator of the RFI, it is required this suggestion be supplied with the submitted RFI. If no suggestion is given where one is possible, the RFI will be returned as incomplete. All Electrical RFIs shall be written on the form provided at the back of this section.

3.04 CLEANING AND PAINTING

A. All equipment, whether exposed to the weather or stored indoors shall be covered to protect it from water, dust and dirt.

B. After installing, all metal finishes shall be cleaned and polished, cleaned of all dirt, rust, cement, plaster, grease, and paint.

C. All equipment with a primer coat of paint shall be given two (2) or more coats of a finish enamel and scratched surfaces be refinished to look like new. Markings, identification, and nameplates shall be replaced.

3.05 EQUIPMENT IDENTIFICATION

A. Provide identifying engraved Bakelite nameplate on all equipment, including pull boxes, to clearly indicate its use, area served, circuit identification, voltage, and any other useful data.

B. Each auxiliary system, including communications, shall be clearly labeled to indicate its function.

3.06 DEVIATION

A. Deviation from the shop drawings in construction or installation of equipment shall not be made unless Shop Drawings showing proposed deviations are submitted to and approved by the Engineer. If any equipment is furnished under this or other divisions with current, voltage, or phase ratings that differ from those shown on the drawings, the Contractor shall notify the Engineer in writing immediately and shall not connect said equipment until instructed as to required changes by the Architect. No extension of time will be granted as a result of such changes.

3.07 EXCAVATIONS

A. All excavations are to be conducted so that no walls or footings shall be disturbed in any way.

B. Remove all surplus earth not needed for backfilling and dispose of same as directed.

3.08 WIRING METHODS

A. All low voltage wiring shall be in raceway with junction boxes and fittings where concealed in walls, in inaccessible ceiling space, or where exposed in finished or unfinished areas.

B. All low voltage wiring shall be in raceway with junction boxes and fittings.

C. Provide conduit sleeves through all walls to accommodate all low voltage cabling. Conduit sleeves shall be sized to allow for 40% future spare capacity.

D. All branch circuit wiring shall be installed in raceway with junction boxes and fittings.

E. Provide access panels as needed for pull boxes and equipment located above ceiling or behind walls.

F. All emergency systems outlet and junction boxes shall have a red plastic tag inside marked critical or life safety as applicable.

G. Multiple feeder runs shall be rod hung, using a strut type channel with individual one-hole clamps, back plates, and machine screws.

H. Any low voltage cables that are not terminated at both ends shall be tagged and labeled per code.

I. See Section 27 0000 for additional requirements of low voltage systems.

3.09 PENETRATIONS OF FIRE RATED ELEMENTS

A. Penetrations of fire rated elements must be made such as to retain that rating. See architectural sheets for specific fire rated locations.

3.10 HANGERS AND SUPPORTS

A. Provide hangers, brackets, and suspension rods and supplementary steel to support equipment.

B. Hangers provided under other divisions shall not be used for support of Division 26, 27, or 28 equipment unless permitted by Architect/Engineer.

3.11 CHASES AND OPENINGS

A. Provide to the masonry and concrete trades all templates and details of chases, openings in floors, and walls as required for Division 26, 27, and equipment installation.

3.12 PAINTING

A. Painting in general will be covered under another division of this specification, except items furnished under Divisions 26, 27, and 28 that are scratched or marred in shipment or installation and shall be refinished by the Division 26 Contractor.

3.13 WORKMANSHIP AND OBSERVATION

A. Workmanship shall be of the best quality and none but competent workers shall be employed under the supervision of a competent foreman. All completed work shall represent a neat, professional appearance.

B. All work and materials shall be subject to observation at any and all times by representatives of the Engineer.

3.14 MISCELLANEOUS

A. Provide complete seismic anchorage and bracing for the lateral and vertical support of conduit and electrical equipment, as required by the International Building Code.

B. Conduits that cross seismic separations shall be installed with flexible connection suitable to accommodate conditions. Secure raceways on each side of a separation and provide a minimum of 36” length of flexible conduit to span separation.

3.15 CABLE AND WIRING ROUTED UNDERGROUND OR UNDERSLAB

A. All cables and conductors, both line voltage and low voltage, routed underground or underslab shall be U.L. listed for installation in wet locations per NEC and WAC codes.

END OF SECTION

REQUEST FOR INFORMATION

Project: _____ **RFI No.** _____

Reference Drawing or Specification: _____

_____

_____

_____

_____

Suggested Solution: _____

_____

_____

Response Needed By: _____

Contractor: **By:** **Date:**

_____

_____

Response: _____

_____

_____

_____

_____

_____

Contractor: _____ **By:** _____ **Date:** _____

This is not an authorization to proceed with work involving additional cost and/or time. Contractor shall obtain authorization prior to proceeding with this work if the response in this RFI will result in additional cost and/or time.

SECTION 26 0010

EXCAVATION AND BACKFILL FOR ELECTRICAL UNDERGROUND UTILITIES

PART 1 - GENERAL

1.01 GENERAL INCLUDES

A. Excavation and Associated Grading

B. Trenching and Trench Protection

C. Backfilling and Compaction

D. Verification of Existing Utilities

E. Protection of Utilities

1.02 RELATED SECTIONS

A. Section 26 0000 – Electrical General Conditions

B. Section 26 0533 - Raceways

C. Section 26 5000 - Lighting

D. Section 27 0000 – Low Voltage System General Requirements

E. Section 27 2000 – Data and Voice Infrastructure

F. Section 28 1600 – Intrusion Alarm System

G. Section 28 3100 – Fire Alarm System

1.03 QUALITY ASSURANCE

A. Inspection of Job Conditions: Prior to starting work and during work, the installer shall examine the work by others, site and job conditions under which excavation, trenching, and backfilling for underground utilities work will be performed, and notify the General Contractor in writing of unsatisfactory conditions or work. Do not proceed with work until unsatisfactory conditions have been corrected in a manner acceptable to the Installer.

B. Codes and Standards: Comply with requirements of the following codes and standards (Latest Edition) except as modified herein:

1. International Conference of Building Officials, "International Building Code".

2. Local requirements for all utility work.

3. OSHA and WISHA regulations.

4. APWA Standard Specifications.

5. National Electrical Code – NFPA 70.

1.04 RESPONSIBILITY

A. The Contractor is solely responsible for compliance with the requirements of the drawings, specifications, local codes and standards, proper construction coordination with work of other trades, and protection and worker's safety. Contractor shall advise Engineer of any discrepancy in, or disagreement with the specifications and/or drawings prior to starting work and not proceed until issue is resolved. Commencement of work shall indicate Contractor's acknowledgement of his expertise in this type of work. Any delay resulting from failure to comply with this procedure will not be basis for an extension of the completion date.

1.05 APPLICABLE PUBLICATIONS

A. The publications listed below form a part of this specification to the extent referenced.

B. American Society of Testing and Materials (ASTM) Publications:

1. D 422-63 Particle Size Analysis of Soils.

2. D 423-66 Liquid Limit of Soils.

3. D 424-59 Plastic Limit and Plasticity Index of Soils.

4. D 1557-78 Moisture Density Relations of Soils using a 10 lb. (4.54kg) Rammer and 18 inches (457 mm) Drop.

5. D 2167-66 Density of Soil In-Place by the Rubber Balloon Method.

6. D 2217-66 Wet preparation of Soil Samples for Particle-Size Analysis and Determination of Soil Contents.

7. D 2487-69 Classification of Soils for Engineering Purposes.

8. D 2922-81 Test Methods for Density of Soil and Soil-Aggregate in Place by Nuclear Methods (Shallow Depth).

9. E 548-79 Generic Criteria for Use in the Evaluation of Testing and Inspection Agencies.

PART 2 - MATERIALS

2.01 SATISFACTORY MATERIALS

A. Materials classified as ASTM D2487, Unified Soil Classification System as SW, SP, GW, and GP are satisfactory for backfill use. Materials classified as SP-SM, GP-GM, GM, GC and ML are also satisfactory for backfill use provided that they contain moisture contents suitable for the intended use and are reasonably free of organic matter. Native material, not considered unsatisfactory as specified below, may comply. Except that no material shall have any object with a dimension exceeding 2 inches and no object shall be sharply angular.

2.02 UNSATISFACTORY MATERIALS

A. Materials classified in ASTM D2487, Unified Soil Classification System as PT, OH, and OL are unsatisfactory. Unsatisfactory materials also include man-made fills, refuse and all materials containing excessive organic matter or having moisture contents which are not suitable for the intended use, or having objects with dimensions exceeding 2 inches (boulders, etc.).

2.03 UNSTABLE MATERIAL

A. Unstable material shall consist of material too wet to properly support the utility conduit or appurtenance structure, and material identified as unsuitable in the National Electrical Code 300-5(F).

2.04 GRAVELLY SAND BORROW MATERIAL

A. Gravelly sand borrow material to provide backfill, or replace unsuitable soil, shall meet the requirements of SW, SP, GW, and GP materials, except that the maximum percentage passing the No. 200 sieve shall not exceed 5% based on the soil fraction passing the U.S. No. 4 sieve, and not contain discrete particles greater than 2 inches in diameter.

2.05 DEGREE OF COMPACTION

A. Degree of compaction shall be expressed as a percentage of the maximum density obtained by the test procedure presented in ASTM D1557, Method D. Minimum compaction requirements shall be as specified in PART 3.

2.06 DRAINAGE GRAVEL

A. Shall be 3/4-inch washed gravel with no more than 2% passing 1/2-inch sieve opening.

2.07 SPECIAL BEDDING AND INITIAL BACKFILL MATERIAL

A. Minus 3/8-inch washed pea gravel.

PART 3 - EXECUTION

3.01 EXCAVATION

A. If workers enter any trench or other excavation four or more feet in depth that does not meet the open pit requirements of WSDOT Section 2.09.3(3)B, it shall be shored and cribbed. The Contractor alone shall be responsible for worker safety. All trench safety systems shall meet the requirements of the Washington Industrial Safety and Health Act, Chapter 49.17 RCW.

B. Excavation of every description and of whatever substances encountered shall be performed to allow the installation of all utilities at the lines and grades as required. During excavation, material satisfactory for backfilling shall be stockpiled in an orderly manner at a distance from the banks of the trench sufficient to avoid overloading and to prevent slides or cave-ins. Adequate drainage shall be provided for the stockpiles and surrounding areas by means of ditches, dikes, or other approved methods. The stockpiles shall also be protected from contamination with unsatisfactory excavated material or other material that may destroy the quality and fitness of the suitable stockpiled material.

C. If the Contractor fails to protect the stockpiles and any material becomes unsatisfactory as a result, such material shall be removed and replaced with satisfactory on-site or imported material from approved sources at no additional cost to the Owner.

D. Excavated material not required or not satisfactory for backfill shall be removed from the site and shall be disposed of off site, at the Contractor's expense, at the Contractor's waste area. Any excess satisfactory excavated materials shall not be mixed with unsatisfactory materials. Unsatisfactory materials shall not cover available suitable materials, or be disposed of in such a manner as to interfere with subsequent borrow operations.

E. Grading shall be done as may be necessary to prevent surface water from flowing into the excavation, and any water accumulating therein shall be removed so that the stability of the bottom and sides of the excavation is maintained. Unauthorized over-excavation shall be backfilled in accordance with paragraph 3.05 BACKFILLIING at no additional cost to the Owner.

F. The Contractor shall provide dewatering as required for installation of underground work.

3.02 TRENCH EXCAVATION

A. The trench excavation shall meet the requirements of the National Electrical Code and local utility standards.

B. Bottom Preparation: The bottoms of trenches shall be accurately graded to provide uniform bearing and support for the bottom quadrant of each section of the conduit and for bedding. Stones of 2 inches or greater in any dimension, or as recommended by the conduit manufacturer, whichever is smaller, shall be removed to avoid point bearing.

C. Removal of Unsuitable Material: Where unsuitable material is encountered in the bottom of the trench, such material shall be removed to the depth directed and replaced to the proper grade with select granular material as provided in paragraph 3.05 BACKFILLING. When removal of unsuitable material is required due to the fault or neglect of the Contractor in his performance of the work, the resulting material shall be excavated and replaced by the Contractor without additional cost to the Owner.

D. Bedding: The bedding surface for the conduit shall provide a firm foundation of uniform density throughout the entire length of the conduit. The conduit shall be bedded carefully in a soil foundation accurately shaped and rounded to conform to the lowest one-fourth of the outside portion of circular conduit or to the lower curved portion of conduit arch for the entire length of pipe or arch. When necessary, the bedding shall be taped. Provide bedding using pea gravel where noted on the drawings.

3.03 EXCAVATION FOR APPURTENANCES

A. Excavation for manholes, handholes or similar structures below grade shall be sufficient to leave at least 12 inches clear between the outer structure surfaces and the face of the excavation or support members. When concrete or masonry is to be placed in an excavated area, special care shall be taken not to disturb the bottom of the excavation. Excavation to the final grade level shall not be made until just before the concrete or masonry is to be placed.

3.04 JACKING, BORING, AND TUNNELING

A. Unless otherwise indicated, excavation shall be by open cut, except that sections of a trench may be jacked, bored, or tunneled if the raceway, cable or duct can be safely and properly installed and backfill can be properly tamped in such sections.

3.05 BACKFILLING

A. Backfill material shall be compacted to 6" layers and as specified in Paragraph 3.06-Compaction.

1. Trench Backfill: Trenches shall be backfilled to finish grade.

2. Replacement of Unstable Material: Unstable material removed from the bottom of the trench of excavation shall be replaced with select granular material or gravel borrow placed in layers not exceeding 6 inches loose thickness.

3. Bedding and Initial Backfill: Bedding shall consist of satisfactory materials. Initial backfill shall be in 6-inch lift.

3.06 COMPACTION

A. Each layer of fill, or the excavated subgrade, shall be compacted to at least 95%, per ASTM D1557, of laboratory maximum density. Compaction shall be accomplished by approved tamping rollers, pneumatic-tired rollers, three-wheel power rollers, or other approved compaction equipment.

3.07 PROTECTION

A. Newly graded excavated or bedded areas shall be protected from traffic and from erosion, and any settlement or washing away that may occur from any cause, prior to acceptance, shall be repaired and grades reestablished to the required elevations and slopes.

END OF SECTION

SECTION 26 0519

WIRES AND CABLES

PART 1 - GENERAL

1.01 WORK INCLUDED

A. Provide all wire, cable, and terminations complete.

1.02 RELATED DOCUMENTS

A. Section 26 0000 – Electrical General Conditions

PART 2 - PRODUCTS

2.01 WIRE AND CABLE (COPPER, 600-VOLT)

A. Interior and Above Grade: All wires to be Type THW or RHW. Type THWN/THHN or XHHW wire may be utilized at Contractors option, subject to code requirements. Wire and cables shall be brought to project in original containers bearing the underwriters label. Provide Type AVA wire where conductors are subject to temperature above 167 Degrees F.

B. Underground: All conductors to be type USE. Increase Raceway size when necessary to accommodate conductors per code. Exception: Underground conductors completely contained in code recognized Raceway and boxes may be Type THW, THWN or XHHW.

2.02 WIRE AND CABLE (ALUMINUM, 600-VOLT)

A. May be used at Contractor's option (except for ground cable) subject to the following requirements:

1. Increased size for same current capacity (increased raceway size may be necessary).

2. No aluminum conductors smaller than #4 AWG shall be used.

3. Insulation requirements are the same as for copper conductor wires and cables.

4. Aluminum conductors shall be made of an AA-8000 series electrical grade aluminum alloy conductor material.

2.03 SPLICES

A. Above Grade: Solderless type only. Preinsulated "twist-on" type (limited to size #10 and smaller). Bolt on compression type with application of preformed insulated cover, heat shrinkable tubing or plastic insulated tape acceptable for all sizes.

B. Below Grade: Splices below grade shall be in handholes and shall be made watertight with epoxy resin type splicing kits similar to Scotchcast.

2.04 TERMINATIONS

A. Compression set, bolted or screw terminal.

B. Conductors #12 and smaller shall utilize eye or forked tongue type compression set terminator when termination is to a bolted or screw set type terminal block or terminal cabinet.

2.05 PLASTIC CABLE TIES

A. Nylon or Equivalent, locking type.

2.06 CABLE TAGS

A. Cable tags shall be installed on all three phase feeder cables. Tags shall be embossed with feeder power source and circuit number, i.e., panel A-26. Use tag part No. FT201 for cables up to 1-1/2 inch, use FT-205 for over 1-1/2 inch.

PART 3 - EXECUTION

3.01 GENERAL

A. Install all wiring in Raceway unless shown or specifically authorized otherwise.

3.02 WIRE SIZE

A. No. 12 AWG minimum for power and lighting circuits.

B. Provide solid wire for No. 10 AWG and smaller, and stranded conductors for No. 8 AWG and larger (600) volts.

3.03 TESTS

A. In addition to the factory testing of all equipment and cable, the Contractor shall test all wiring connections for continuity and ground before any fixtures or other loads are connected. Tests shall be made with a 500V minimum DC "Megger" type tester. If tests indicate faulty insulation (less than 2 megohms), such defects shall be corrected and tested again. Contractor shall provide all apparatus to make tests and shall bear all expenses of required testing. Routine operation tests shall be made on all pieces of equipment to demonstrate that working parts are in operating condition. Results of all tests shall be recorded and submitted to the Architect. The Contractor shall immediately replace all parts, which fail to pass the test.

B. Measure the OHMIC value of the Electric Service Entrance metallic "System Ground" with reference to "Earth Ground" using the "Multiple Ground Rod Fall-In-Potential" method and suitable instruments. Maximum resistance to ground shall be less than 10 ohms. If this resistance cannot be obtained with the ground system shown, notify the Architect immediately for further instructions. Provide OHMIC test results to Engineer.

C. All circuits both in and out of the building shall test out free of grounds, short circuits and other defects.

D. Check and record catalog number and ampere size of controller overload heaters installed, nameplate full-load amperes, and actual operating amperes of each motor. **IMPORTANT**: Submit recorded data in triplicate to the Engineer. Check proper load balance on the electrical system, direction of rotation, lubrication, and overload protection of all motors before placing in operation.

E. Provide a log of ampere reading for all panels from phase to neutral for 4 wire panels and from phase to phase for 3 wire panels. These readings shall be taken with all loads activated.

F. The final test of all equipment shall be made on dates designated by the Architect/Engineer and all readings shall be made in his presence.

G. Feeders shall be checked to ensure all phases are energized before connecting to their respective motors. Each motor shall rotate in the proper direction for its respective load. Prior to rotation test, all bearings shall be inspected for proper lubrication.

H. Minimum megger test for equipment shall be as follows:

Equipment Maximum Voltage Rating	Minimum Test Resistance
1,000-Volts or less	2 Megohms

I. Provide certification of torque values for feeder and service entrance conductors per equipment manufacturer's recommendation.

3.04 CONDUCTOR SIZES, REFERENCED ON PLANS

A. Copper, type THW or RHW unless noted.

3.05 ALUMINUM CONDUCTORS

A. Aluminum conductors serving switchboards and service entrance rated panelboard shall be terminated using compression type oxide inhibiting compound filled aluminum lugs only.

B. Compression fittings shall be sized for the conductor used and shall be set with a tool, which assures a preset deformation before release.

C. Aluminum lugs, where in contact with copper studs, bolts or bus, shall be plated.

D. Bolted aluminum lugs shall be installed with a Belleville washer under nut unless specifically permitted otherwise.

E. Branch panelboards with bolted pressure lugs shall use aluminum conductors designed to minimize creep; i.e., Stabiloy by ALCAN. Oxide inhibiting joint compound shall be applied to both the conductor and terminal lug. Manufacturer's torque specifications shall be used to prevent creep.

3.06 PULLING

A. Use no mechanical means for pulling No. 8 AWG conductors and smaller. Powdered soap stone or approved spray cream shall be the only lubricant used.

3.07 STRIPPING INSULATION

A. Do not ring the cable, always pare or pencil.

3.08 TAPING

A. If used shall be half lapped synthetic tape.

3.09 CONDUCTORS IN PANELS AND SWITCHBOARDS

A. Conductors in panels, switchboards, and terminal cabinets shall be neatly grouped and formed in a manner to "Fan" into terminals with regular spacing.

3.10 CABLE SUPPORTS

A. Provide conductor support devices as required by code in vertical cable runs.

3.11 RACEWAY SIZES REFERENCED ON DRAWINGS

A. Raceways are sized for copper, type THW, unless otherwise noted. Size all Raceways per code unless specifically noted to be larger on the drawings.

END OF SECTION

SECTION 26 0526

GROUNDING

PART 1 - GENERAL

1.01 WORK INCLUDED

A. A grounding system shall be provided for neutral ground and equipment ground as required by code.

B. An isolated grounding system shall be provided for all isolated ground receptacles as allowed by Code (2005 NEC 250-146, paragraph d).

C. Provide all grounding of other systems as indicated in Divisions 26, 27, and 28.

1.02 BRANCH CIRCUIT GROUNDING CONDUCTORS

A. This facility is required by NEC 517-11 to be provided with branch circuit ground wires. (Do not provide ground wires in rooms and spaces exempted by NEC 517-30).

PART 2 - PRODUCTS

2.01 GROUNDING CONDUCTORS

A. Copper, code size, with physical protection where subject to damage. Bare or green insulated.

2.02 GROUND RODS

A. 3/4" x 8'-0" copper clad steel.

2.03 ISOLATED GROUND BARS

A. Provide in all panels containing isolated ground circuits.

PART 3 - EXECUTION

3.01 GENERAL

A. Provide all grounding for electrical systems and equipment as required by codes and as specified herein.

3.02 SIZE OF GROUND WIRE

A. As required by code. Where ground wire is exposed to physical damage or is used outside of the building, protect with conduit.

3.03 GROUND RODS

A. Provide as shown and/or required. Connect the ground conductor to each rod.

3.04 CONCRETE-ENCASED ELECTRODE

A. Provide in accordance with NEC 2017, Article 250.52 (A)(3) and Article 250.68 (C)(3).

3.05 GROUND CONNECTION OF WATER PIPING

A. Metal internal piping shall be grounded, as part of this Contract. This includes jumpers for dielectric fittings.

3.06 CONNECTION TO THE GROUND BUS

A. Provide connections in accordance with the codes; including but not limited to conduit system, switchboard frame, service neutral and electrically operated equipment and devices. No device or equipment shall be connected for electrical service which has a neutral conductor connected to a grounding conductor or to the frame within the device or equipment.

3.07 METHOD OF CONNECTION

A. Make all underground ground connections and ground cable splices by thermal welding. Aboveground ground connections and ground cable splices may be by permanent compression connector. Grounding lugs, where provided as standard Manufacturer's items on equipment furnished, may be used.

3.08 FLEXIBLE RACEWAY

A. Shall not be used for grounding. Install separate ground conductor in all flexible raceway.

3.09 PVC RACEWAY

A. Install separate ground conductor in all PVC raceway as required per code.

3.10 DROP CORDS

A. Shall have a grounding wire and be connected with a grounding type plug and receptacle.

3.11 TESTING REQUIREMENTS (*utilize if the service is 600 amps and over, lightning protection is required or comm requirement)

A. Measure the OHMIC value of the Electric Service Entrance metallic "System Ground" with reference to "Earth Ground" using the "Multiple Ground Rod Fall-In-Potential" method and suitable instruments. Maximum resistance to ground shall be less than 25 ohms. If this resistance cannot be obtained with the ground system shown, notify the Architect immediately for further instructions. Provide OHMIC test results to Engineer.

END OF SECTION

SECTION 26 0532

OUTLET AND PULL BOXES

PART 1 - GENERAL

1.01 WORK INCLUDED

A. Provide outlet and pull boxes to enclose devices, permit the pulling of conductors and for wire splices and branches.

1.02 RELATED DOCUMENTS

A. Section 26 0000 – Electrical General Conditions

PART 2 - PRODUCTS

2.01 INTERIOR WIRING

A. General: Outlet and pull boxes shall be pressed drawn steel, zinc coated with plaster ring where applicable. Welded boxes not allowed. Four-inch size minimum. Large pull boxes shall be fabricated sheet steel, zinc coated or baked enamel finish, with return flange and screw retained cover.

B. Surface Metal Raceway: Boxes of same Manufacture and to match Raceway. Boxes to accommodate standard devices and device plate.

C. Concrete and Masonry: Boxes for casting in concrete or mounting in masonry walls shall be the type specifically designed for that purpose.

D. Install pull boxes so as to be accessible after completion of building construction.

E. Ceiling outlet boxes shall be galvanized octagonal 4 inch, 1-1/2-inch-deep (without fixture stud), 2-1/8 inches deep (with fixture stud).

2.02 EXTERIOR WIRING

A. Above Grade: Outlet and junction boxes shall be cast or malleable iron or shall be cast of corrosion resistant alloy compatible with Raceway to which it is connected. Pull boxes shall be fabricated of heavy gauge steel and hot dipped galvanized. All boxes shall have gasketed covers.

B. Below Grade: Where exposed to earth, boxes (handholes) shall be constructed of precast concrete with size, configuration, cover, grates and reinforcing as required by the particular installation.

1. Manufacturer: Similar to Utility Vault 3030LA with base or Fogtite J11 Type 2 with base. Lid shall be H-20 rated where installed in traffic areas. Where not exposed to earth shall comply with Paragraph 2.02A above.

C. Exterior outlet boxes shall be weather resistant and rain tight, with appropriate covers, gaskets and screws.

PART 3 - EXECUTION

3.01 ANCHORING

A. All boxes shall be firmly anchored directly or with concealed bracing to building studs or joints. Boxes must be so attached so that they will not "Rock" or "Shift" when devices are operated.

3.02 FLUSH MOUNTING

A. Except for surface mounted boxes or boxes above accessible ceilings, all boxes shall have front edge (box or plaster ring) even with the finished surface of the wall or ceiling.

3.03 ELECTRICAL OUTLETS

A. General: Coordinate the work of this section with the work of other sections and trades. Study all Drawings that form a part of this Contract and confer with various trades involved to eliminate conflicts between the work of this section and the work of other trades. Check and verify outlet locations indicated on Architectural Drawings, door swings, installation details, layouts of suspended ceilings and locations of all plumbing, heating and ventilating equipment.

B. Centered on Built-In Work: In the case of doors, cabinets, recessed or similar features, or where outlets are centered between such features, such as between a door jamb and a cabinet, make these outlet locations exact. Relocate any outlets which are located off center.

C. Above Counter: Locate device outlet just above backsplash or 6” above counter if there is no backsplash. Review casework shop drawings prior to final rough-in.

D. Vertical and Horizontal Relationships: Where more than one outlet is shown or specified to be at the same elevation or one above the other, align them exactly on centerlines horizontally or vertically. Relocate as directed all such outlets (including lighting, receptacle, power signal and thermostat outlets) which are not so installed, at no additional cost to Owner.

E. Device Outlet Height: Measure from the finished floor.

*Switches	4 Feet, Set Vertically, to Top of Box
*Receptacles, Telecommunications	18 Inches, Set Vertically to Centerline
Other	As Noted or as Directed by Architect
∗ *Heights may vary.*	*See Drawings for additional information*

F. Ceiling Location: For acoustical material locate outlet either at the corner joint or in the center of a panel, whichever is closer to the normal spacing. Locate all outlets in the same room in the same panel location.

G. Installed In Sound Walls: Boxes installed in sound walls shall not be installed back-to-back. All boxes shall be separated by one stud space and shall be interconnected with flex conduit with a 90° loop. Where stud space separation is not possible, utilize sound attenuating mastic around each box. 3M Fire Barrier Moldable Putty Pads MPP+ (2.54 mm minimum) or similar.

3.04 ELECTRICAL WORK IN COUNTERBACKS, MILLWORK AND CASEWORK

A. Provide as shown and/or specified. Provide templates, where required, to other trades for drilling and cutting to ensure accurate location of electrical fixtures (outlets and devices) as verified with the Architect. Provide all wiring, devices, plates and connections required by said fixture.

3.05 CONNECTION TO EQUIPMENT

A. For equipment furnished under this or other Divisions of the Specifications, or by others. Provide outlet boxes of sizes and at locations necessary to serve such equipment. An outlet box is required if the equipment has pigtail wires for external connection, does not have space to accommodate circuit wiring used. Study equipment details to assure proper coordination.

3.06 BLANK COVERS

A. Provide blank covers or plates over all boxes not covered by equipment.

3.07 JUNCTION OR PULL BOXES

A. Pull and junction boxes shall be installed as shown, and to facilitate pulling of wire and to limit the number of bends within code requirements. Boxes shall be permanently accessible and shall be placed only at locations approved by the Architect.

B. In suspended ceiling spaces, boxes shall be supported from the structure independently from ceiling suspension system.

C. The Drawings do not necessarily show every pull or Junction Box required. The Contractor is permitted to provide boxes deemed necessary by him for his work when installed in accordance with these Specifications.

3.08 ELECTRIC WATER COOLER

A. Conceal the Electrical Outlet behind the unit housing as provided for by the Manufacturer.

3.09 BOXES CONTAINING MULTIPLE DEVICES

A. Boxes containing emergency and normal devices are permitted only with steel barriers Manufactured especially for the purpose of dividing the box into two completely separate compartments.

B. Device Boxes Containing Multiple Devices and Wiring Rated Over 150 Volts to Ground and Over 300 Volts Between Conductors are permitted only with steel barrier manufactured especially for the purpose of dividing the box into separate compartments for each device having exposed live parts.

3.10 BOXES IN EARTH

A. Provide for all wire splices and as required to pull conductors. Boxes (handholes) shall be set in place on a 3" sand bed. Coverplates shall be flush to, and match the slope of, the final surface grade.

3.11 COLOR CODING

A. All Junction Boxes installed in accessible spaces and exposed in unfinished areas shall be color coded using spray paint or tape on the box and cover as applicable in the following manner:

277/480-Volt ..... Sand
120/208-Volt ..... Gray
Emergency Power ..... Orange
Fire Alarm ..... Red
Clock & Program ..... Green
Intrusion Alarm ..... Yellow
Telephone ..... Dark Blue
Nurse Call ..... Light Blue
Public Address ..... Silver
Television ..... Rust

B. The colors shall match the colors used on the Raceway - See Section 26 0533.

3.12 NAMEPLATES

A. For all line voltage junction boxes, provide engraved nameplate indicating circuit numbering of all wiring in junction box.

END OF SECTION

SECTION 26 0533

RACEWAY

PART 1 - GENERAL

1.01 WORK INCLUDED

A. Provide Raceway System complete.

1.02 RELATED DOCUMENTS

A. Section 26 0000 – Electrical General Conditions

PART 2 - PRODUCTS

2.01 GALVANIZED RIGID STEEL CONDUIT (GRS)

A. General: Hot dipped galvanized.

B. Fittings: Galvanized malleable iron or noncorrosive alloy compatible with galvanized conduit. Erickson couplings, watertight split couplings (O.Z. type or equivalent) permitted. Running thread or set screw type fittings not approved.

2.02 INTERMEDIATE METAL CONDUIT (IMC)

A. General: Hot Dipped galvanized.

B. Fittings: Galvanized malleable iron or noncorrosive alloy compatible with galvanized conduit. Erickson couplings, watertight split couplings (O.Z. type or equivalent) permitted. Running thread or set screw type fittings not approved.

2.03 ELECTRICAL METALLIC TUBING (EMT)

A. General: Hot dipped galvanized.

B. Fittings: Raintight; steel or malleable iron type using a split corrugated compression ring and tightening nut or stainless-steel locking disc. Steel set screw fittings are acceptable for dry locations. Indenter, drive-on and pressure cast or die cast type set screw are not acceptable.

2.04 FLEXIBLE METAL CONDUIT (FMC, LFMC)

A. Dry Locations:

1. General: Galvanized flexible steel for dry locations only.

2. Fittings: Malleable iron or steel, Thomas and Betts "squeeze" type or equal.

B. Damp and Wet Locations:

1. Liquid Tight: Polyvinyl chloride (PVC) weatherproof cover over flexible steel conduit.

2. Fittings: Thomas and Betts "liquid tight" or equal.

2.05 SURFACE METAL RACEWAY

A. Formed steel or aluminum type. Standard factory finish. Where color choice is available, consult Architect/Engineer for selection prior to ordering.

2.06 RIGID NON-METALLIC CONDUIT (PVC)

A. Schedule 40 rigid polyvinyl chloride type unless otherwise noted.

2.07 RIGID ALUMINUM CONDUIT

A. Permitted only in specified locations.

B. Fittings copper free cast aluminum.

PART 3 - EXECUTION

3.01 GENERAL

A. Install Raceway concealed in construction unless noted otherwise on the Drawings or specifically approved in writing by the Architect/Engineer.

B. Cut Raceway ends square, ream and extend maximum distance into all couplings and connectors.

C. Provide and install manufactured end caps on all Raceway ends during construction to prevent the entrance of water or dirt. Tape, as a cover, not permitted.

D. Swab out all Raceways before pulling wires.

E. All elbows for GRS and PVC Raceway shall be factory radius bends. For all other Raceway, use factory radius bends of 1-1/4" and larger diameter.

F. Raceway shall not penetrate sheet metal ducts unless permission is granted by Architect/Engineer. All sleeves shall be provided for Raceway installation.

G. Provide 2 - 3/4" C.O. stub into accessible ceiling space from all recessed panelboards or systems terminal boxes.

3.02 GALVANIZED RIGID STEEL CONDUIT

A. All Connections shall be watertight. Install for all Raceways in concrete or where subject to damage.

3.03 INTERMEDIATE METAL CONDUIT

A. Intermediate metal conduit is permitted as a substitute for galvanized rigid steel conduit except where GRS is required by code.

3.04 ELECTRICAL METALLIC TUBING

A. Install for wiring in masonry, frame construction, furred ceilings and above suspended ceilings. May be used for exposed work in unfinished areas where not subject to damage. Where construction involves masonry work, surface cut masonry units wherever such masonry units are to remain unplastered or uncovered in complete construction.

3.05 RIGID ALUMINUM CONDUIT

A. May be used in lieu of galvanized rigid steel conduit where Raceway is run above grade or inside of buildings; rigid aluminum conduit not permitted where Raceways are encased in or attached to concrete or are below grade.

3.06 RACEWAYS UNDERGROUND

A. Galvanized rigid steel conduit - painted with two coats of bitumastic paint - or galvanized rigid steel conduit with 15 mil. polyvinyl chloride (PVC) jacket (repair abrasions with PVC base paint or PVC).

B. PVC Raceways may be used for underground runs when permitted by code. Field bends, when necessary, shall be formed only with factory recommended heater. Penetrations through floor and walls shall be galvanized rigid steel (GRS) conduit. PVC, if used, shall be increased in size from that shown to include code required ground wire.

C. All underground bends in excess of 10 degrees and all elbows shall be GRS.

D. Arrange and slope Raceways entering building to drain away from building.

E. Ground wires shall be provided in all PVC Raceway.

3.07 INSERTS, SHIELDS AND SLEEVES

A. Furnish and set in place, in advance of pouring slabs and walls, all inserts and sleeves needed to execute Division 26 equipment installation.

B. Where supports in slabs are required after wall has been poured, use a drilled-in threaded insert, installed as recommended by Manufacturer.

C. Sleeves shall be provided for all wall penetrations.

3.08 RACEWAYS THAT STUB UP THROUGH FLOOR

A. Install at such depth that the exposed Raceway is vertical and no curved section of the elbow is visible.

B. PVC Raceway shall not be stubbed through floors.

3.09 SEALING OF RACEWAY PENETRATIONS

A. Exterior Wall Surfaces Above Grade: Seal around all penetrations with caulking approved by Engineer. For concrete construction above ground level, cast Raceway in wall or core drill wall and hard pack with a mixture of equal parts of sand and cement.

B. Exterior Surfaces Below Grade: Cast Raceway into wall (or floor) or use manufactured seal assembly (such as O.Z. type "FSK") cast in place.

C. Roofs: Provide mopped, lead, roof jack where Raceway penetrates roof membrane.

D. Fire Rated Floors, Walls, Ceiling/Roofs: Concrete or masonry, seal around Raceway penetration with Dow Corning 3-6548 silicone RTV foam or approved equal. Plaster or gypsum wallboard, seal around Raceway penetration with plaster, fire tape per local Fire Marshal's requirements.

3.10 SEALING OF RACEWAYS

A. Seal interior of all Raceways which pass through buildings roofs, floors or through outside walls of the building, above or below grade. Seal on the end inside the building using duct sealing mastic, non-hardening compound type, specially designed for such service to maintain the integrity of the seal of the wall, floor or roof. Pack around the wires in the Raceways.

3.11 HANGERS FOR RACEWAYS

A. In suspended ceiling spaces Contractor may, at his option, attach 1/2" or 3/4" EMT Raceways to the ceiling suspension system where such system is structurally suitable on independent wire secured at both ends; in which case, provide clips manufactured for the purpose.

B. When more than two Raceways will use the same routing, group together on a patented channel support system (such as Unistrut).

3.12 SURFACE METAL RACEWAY

A. Install parallel to building surface (i.e., wall, ceiling, floor). Fasten to surface as recommended by Manufacturer. Mount so Raceway is in the least obvious location. Shall be used in lieu of conduit in finished areas.

3.13 FLEXIBLE CONDUIT

A. Flexible conduit shall be used **only** for connection to motors and equipment subject to vibration with 90 degrees loop minimum to allow for isolation and for lay-in fluorescent fixtures above T-Bar ceilings. For fixture installations, one end of flex must terminate in rough-in junction box. Flex conduit shall not be installed over 6' long or used to connect from fixture to fixture. Use liquid tight for pumps, equipment which is regularly washed down, and equipment in damp locations. Provide ground wire.

3.14 COLOR CODING

A. General: Provide color bands of tape or paint one inch (25 mm) wide for Raceways up to two inches (51 mm) in diameter and one-half the Raceway diameter for larger Raceways, applied at panel and pullbox locations within each room, and 50 ft. (15.25 m) on centers within an area.

B. Color Banding:

120/208 Volt ..... Gray
277/480 Volt ..... Sand
Clock and Program ..... Green
Emergency Power ..... Orange
Fire Alarm ..... Red
Intrusion Alarm ..... Yellow
Low Voltage Switching ..... Black
Nurse Call ..... Light Blue
Public Address ..... Silver
Telephone ..... Dark Blue
Television ..... Rust

C. The colors shall match the colors used on the boxes - See Section 26 0532.

3.15 PULL CORDS

A. Nylon type shall be included in all installed empty Raceway.

END OF SECTION

SECTION 26 0534

METAL CLAD CABLE (TYPE MC) AND FITTINGS

PART 1 - GENERAL

1.01 WORK INCLUDED

A. Provide Metal Clad (Type MC) Cable for power, control and lighting systems.

B. Provide wiring connections and terminations.

1.02 REGULATORY REQUIREMENTS

A. UL 1569. Products shall be tested, approved and labeled/listed by Underwriters Laboratories, Inc.

1.03 USES PERMITTED

A. MC Cable is permitted to be used for 20amp lighting and power circuits where routing is above grade, concealed and the installation meets the requirements of NEC 330.

B. MC Cable shall NOT be used for homerun circuits from the fixture, receptacle, or equipment to the panelboard. Hard conduit must be used from the panelboard to the nearest accessible ceiling space to the panelboard.

C. MC Cable shall not be used for HVAC equipment.

PART 2 - PRODUCTS

2.01 CABLE ASSEMBLY

A. Metal clad cable assemblies shall consist of 2, 3 or 4 current carrying conductors and an equipment ground conductor.

B. Conductors: Solid Copper conductor, No. 12 AWG minimum or No. 10 AWG maximum. Installation methods shall be as specified under Part 3 - Execution.

C. Insulation: Conductor insulation shall be rated 600-volt, Type THHN, 90°C dry.

D. Fillers: Fillers shall be non-hygroscopic and non-wicking.

E. Binder: Core binder shall be corrugated polyester.

F. Sheath: The metal sheath shall be galvanized steel or aluminum. The metal sheath shall be extruded onto the cable or applied longitudinally, then wrapped and welded. The sheath shall then be corrugated for greater flexibility.

G. Jacketing: When PVC jacketing is required, the jacket shall be flame-retardant PVC with a temperature range of -40°C to 90°C.

H. Equipment Grounding Conductor: The equipment ground wire shall be of the same construction as specified in 2.02.A and 2.02.B and be at a minimum the same size as the current carrying conductors. The insulation color shall be green.

2.02 FITTINGS

A. Fittings shall be UL listed and identified for such use with metal clad continuous corrugated sheath cable, with or without PVC jacketing, as is appropriate for the installation.

B. Connectors shall be of steel or malleable iron and shall be a squeeze type clamp connector with a locknut for non-jacketed metal clad cable. Compression gland type connectors shall be used for jacketed metal clad cable.

PART 3 - EXECUTION

3.01 INSTALLATION – POWER AND LIGHTING SYSTEMS WIRING

A. All wiring shall be installed in compliance with the latest version of the National Electrical Code and all other applicable codes and standards as indicated elsewhere in these specifications.

B. Use of metal clad cable shall be permitted only for lighting, equipment and receptacle branch circuits. Metal clad cable shall not be permitted in locations designated to be hazardous Class I, II or III.

C. Metal clad cable shall be permitted only for motor circuits where the motor being served is less than ½ HP and rated for 120V, single phase. Metal clad cable is not permitted for HVAC equipment and controls.

D. Metal clad cable shall only be installed concealed within walls and above ceiling interstitial spaces. Where there is no ceiling interstitial space, metal clad cable may not be used.

E. Metal clad cable shall not be installed between floor levels. Provide hard pipe (i.e., EMT, RGS, IMC) when routing between floors levels.

F. Bends in corrugated sheath metal clad cable shall be made so that the cable will not be damaged. The radius of the curve of the inner edge of any bend shall not be less than seven (7) times the diameter of the metallic sheath.

G. Metal clad cable is not permitted to connect branch circuits to fumehoods, gas storage cabinets, or chemical storage cabinets.

H. No metal clad cable shall be installed in ventilation ducts or plenums.

I. Conductors in Enclosures: Provide neat and workmanlike installation with conductors tied with T&B Ty-Rap, Virginia Plastics, or equal, nylon wire ties in terminal cabinets, gutters and similar locations.

J. MC cable shall only be installed in dry locations.

3.02 FITTINGS

A. Fittings used for connecting metal clad cable to boxes, light fixtures or other equipment shall be UL listed and identified for such use.

B. Cable preparation for installation of fittings shall follow manufacturer's instructions. The manufacturer's specialized tools shall be used for preparing cable ends for installation of fittings.

C. The cable end shall be cut square to ensure flush seating of the cable into the fitting. Fitting securement screws shall be properly torqued. Cable ends shall be fitted with insulating bushings intended for the type of metal clad cable being installed.

D. For jacketed metal clad cable, the outer jacket shall be removed to the length specified by the fitting manufacturer's instructions. Remove oils or solvent by-products from the outer jacket of the cable. The cable end shall be cut square to ensure flush seating of the cable into the fitting. The fitting gland nut shall be properly torqued to the manufacturer's specifications.

3.03 ARRANGEMENT AND SUPPORT

A. Metal clad cables shall be run parallel with walls or structural elements. Vertical runs shall be plumb; horizontal runs level and parallel with structure, as appropriate. Groups shall be racked together neatly with both straight runs and bends parallel and uniformly spaced.

B. Metal clad cables shall be securely fastened in place at intervals of not more than six feet, with suitable clamps or fasteners of approved type, and all vertical conduits shall be properly supported to present a mechanically rigid and secure installation.

C. Metal clad cable installed parallel to framing members, such as studs, joist, or rafters, shall be supported so that the nearest outside surface of the cable is not less than 1-1/4 inches from the nearest edge of the framing member. Where this distance cannot be maintained, the cable shall be protected by a steel plate, sleeve, or equivalent that is at least 1/16-inch thick.

D. Maintain at least 6-inch clearance between metal clad cables and other piping systems. Maintain 12-inch clearance between metal clad cables and heat sources such as flues, steam pipes, and heating appliances.

E. No metal clad cable shall be fastened to other conduits or pipes or installed so as to prevent the ready removal of other pipes or ducts for repairs.

F. Individual metal clad cables hung from roof structure or structural ceiling shall be supported by split-ring hangers and wrought-iron hanger rods. Where three (3) or more metal clad cables are suspended from the ceiling in parallel runs, use steel channels, Kindorf, Unistrut or equal, hung from 1/2-inch rods to support the conduits. The conduit on these channels shall be held in place with metal clad cable clamps designed for the particular channel that is used.

G. Secure metal clad cable support racks to concrete walls and ceilings by means of cast-in-place anchors; die-cast, rustproof alloy expansion shields; or cast flush anchors. Wooden plugs, plastic inserts, or gunpowder driven inserts shall not be used as a base to secure conduit supports.

H. Metal clad cable shall be supported immediately on each side of a bend and not more that one (1) foot from an enclosure where a run of metal clad cable ends.

I. Use of Cable Tray:

1. The sum of the cross-sectional areas of all cables shall not exceed the maximum allowable cable fill area allowed by NEC Tables 392.9, 392.9(E) and 392.9(F).

2. Cables shall be installed in a single layer with a maintained spacing of not less than one cable diameter between cables.

3. Ampacity of cables installed in cable tray shall meet the requirements of NEC 392.11.

3.04 INSPECTION AND TESTS

A. General: The electrical installation shall be inspected and tested to ensure safety to building occupants and operating personnel and conformity to Code

B. Measure and record insulation resistance of all power and control wiring including insulation resistance of all equipment:

1. The insulation resistance of each circuit phase-to-phase and phase-to-ground shall be measured. For circuits rated less than 600 volts, the resistance shall not be less than 2 megohms.

2. Systems rated above 240 volts shall be tested with a 1000-volt Megohmeter. Circuits rated 240 volts and below shall be tested with a 500-volt Megohmeter. The D.C. potential shall be applied for thirty (30) seconds.

C. The contractor shall record test readings and submit certified test to the Engineer for review and acceptance approval before energizing respective circuits.

END OF SECTION

SECTION 26 0923

LIGHTING CONTROL PANEL

PART 1 - GENERAL

1.01 INTRODUCTION

A. The work covered in this section is subject to all of the requirements in the general conditions of the specifications. Contractor shall coordinate all of the work in this section with all the trades covered in the other sections of the specification to provide a complete and operative system.

1.02 RELATED DOCUMENTS

A. Section 26 0000 – Electrical General Conditions

1.03 DESCRIPTION OF WORK

A. Extent of lighting control system work is indicated by drawings and by the requirements of this section. It is defined to include low voltage lighting control panels, switch inputs, and wiring.

B. The work covered by this section of the specifications shall be coordinated with the related work as specified elsewhere under the project specifications.

1.04 QUALITY ASSURANCE

A. ETL Approvals: The control panels shall be tested and listed under the UL 916 Energy Management Equipment standards by a nationally recognized testing laboratory.

B. NEC Compliance: The control system shall comply with all applicable National Electrical Codes regarding electrical wiring standards.

C. NEMA Compliance: The control system shall comply with all applicable portions of the NEMA standards regarding the types of electrical equipment enclosures.

D. Component Pre-Testing: All control equipment shall undergo strict inspection standards. The equipment shall be previously tested and burned-in at the factory prior to installation.

E. System Checkout: A factory-trained technician or factory-authorized personnel or Contractor shall functionally test the control system and verify performance after installation.

F. Manufacturer: Manufacturer shall have a minimum of 10 years experience in control systems. hese specifications are based on the Control Keeper as manufactured by PCI Lighting Control Systems (1-802-658-6445). Substitutions of the specified equipment will be considered providing sufficient documentation is provided to the Engineer which certifies that the equipment qualification meets the requirements of this specification.

1.05 SUBMITTALS

A. Product Data: Submit manufacturer's data on lighting control system and components.

B. Shop Drawings: Submit drawings of lighting control system and accessories including, but not necessarily limited to, the low voltage relay panels, power wiring, and switch inputs.

1. Riser Diagram/System Diagram

2. Switch Input Wiring

PART 2 - PRODUCTS

2.01 MATERIALS AND COMPONENTS

A. System Description:

1. The lighting control system shall consist of low voltage relay control panels with up to 32 relays.

2. Each low voltage lighting control panel shall be microprocessor controlled with LCD display and programming keypad.

3. Programmable intelligence shall include Time-Of-Day control, 32 holiday dates, a Warn Off to warn occupants of an impending OFF, preset control, local control, and astronomical clock with offsets.

4. Each control panel shall provide a Warn Off (flash the lights) to inform the occupants of an impending OFF command. The Warn Off command will allow 10 extra minutes for the occupants to override their lights or exit the premises.

5. Control panels shall permit lighting to be overridden ON for after-hours use or cleaning. These overrides shall be hard-wired inputs or voice-guided touch-tone telephone control.

6. Control panel enclosures shall offer a maximum of either 16 or 32 relays.

7. Programming the control system shall be through the local integral keypad or through a PC running the Supervisor software.

8. Each panel shall have at least 32 programmable switch inputs. Switch inputs can be configured to accept a momentary, maintaining, or toggle type switch. Each switch input can be programmed to control any of the output relays.

9. The control system shall provide networking between lighting control panels. One network may support a maximum of 127 control panels. Panels shall support data sharing for global control. All inputs are transferable over the network to create any switching pattern required.

B. Hardware Features:

1. Operator Interface: The interface for programming the control panels shall reside in firmware resident within the control panel. The programming shall consist of a circuit board mounted keypad capable of programming all switch inputs and relay outputs to switch assignments. Systems that utilize blocking diode technology for relay assignment shall not be acceptable.

   a. The integral keypad and LCD display shall provide access to all programming features. The keypad shall permit the user to manually command any or all relays individually.

   b. Each panel shall control its own loads from internal memory. A control system that relies on a central control computer/processor or external time clocks shall not be permitted.

2. Contact Inputs: The control system shall allow dry contacts for override purposes. Momentary or maintained contacts shall be supported as three-wire (momentary) or two-wire (SPST) inputs respectively. Inputs shall be dry contacts (24 VDC @ 12 mA, internally supplied to the inputs). An input shall be software linkable to any number of relays for override control. The control system shall accept 32 dry contact switch inputs.

   a. Software linking of inputs between panels shall eliminate the use of blocking diodes. Up to five control panels may share switch inputs.

3. Time-Of-Day (TOD) Control: The programmable low voltage lighting control panels shall support TOD scheduling. Each controller shall provide 32 TOD schedules for relay control. Software shall permit the user to create ONs and OFFs, or ONs only, or OFFs only. The control panels shall provide default times and group linking for rapid programming. The controller shall provide 12 programs for Monday-Friday, seven programs for Saturday, seven programs for Sunday, and six programs for holidays.

4. Photocell Control: The controller shall accept user-adjustable ambient light sensors. Sensors shall provide for both outdoor and indoor applications. The sensor shall provide user-adjustable deadband control.

5. Preset Control: Each input shall provide the ability to perform presets from switch inputs. Relays commanded from a switch input shall provide various switching patterns based on programming. One input may command certain relays ON and other relays OFF.

6. Warn Off: The Warn Off option shall provide a blink and a 10-minute delay OFF timer to the selected output when the linked output proceeds to the OFF state. This option occurs with the switch inputs, telephone override control and the Time-Of-Day schedules.

7. Relay Type: The system shall utilize control relays that are rated to at least 20 amps at 277 VAC. The relays shall be magnetically held. Relays that are latched or mechanically held are not acceptable. A limited 10-year warranty shall be provided on the individual relays.

8. Modular Design: The control system shall employ all modular connectors to avoid repeat wiring in case of component failure. The system CPU board shall be mounted on quick-release spring pins that shall permit an entire change out of the processor and input board in less than one minute.

    a. All connections for the switch inputs shall incorporate modular connectors. The relay board shall be modular and designed for rapid field replacement or upgrading. Systems that do not employ modular connectors shall not be acceptable.

9. Hardware Output Features:

    a. Lighted Switch Card (LSC): The controller shall provide for pilot light wall switch annunciation. A modular card shall connect into the ControlKeeper logic board and shall provide power to illuminate pilot light switches. This shall confirm relay operation. When a relay is in ON position, the pilot light switch shall be illuminated.

    b. Remote Relay Card (LRC): Control Keeper shall provide for remote placement of the control relays. A modular card shall connect into the relay compartment of the Control Keeper controller. Twisted (three) conductor cable shall power and control the remote-mounted relays. Maximum distance is 500 feet with 18 awg wire.

    c. Two Pole Relay Card (TPRC): The controller shall provide for two pole relay control. The Two Pole Relay Card shall offer the feature of controlling two pole voltages such as 208, 240 and 480 VAC lighting loads at 20 amps. The relays should be modular in design and offer manual hand override control. A visual indication of relay status shall be provided. The 208, 240 VAC version shall provide 8 relays per card whereas the 480 VAC version shall provide 4 relays per card. Combination of relays shall be permitted since relays shall snap into location.

d. Automatic Relay Card (ARC): The system shall utilize hybrid control relays that are rated to 20 amps at 277 VAC. The hybrid relay shall combine a high speed electronic switch with a mechanical relay to create a unique switching device. The hybrid design shall look at each AC phase and shall close the electronic switch precisely as the absolute zero crossing. The mechanical relay in parallel shall follow and close after the in-rush current condition. The relay shall provide an integral switch for both manual hand operation and visual indication of relay status.

e. Dimming Ballast Card (DBC): The controller shall provide for fluorescent dimming control. The fluorescent dimmer card shall provide sixteen 1-10-volt signal outputs per controller. Each output shall drive an entire lighting circuit ballast load. The outputs may be programmed to provide time of day dimming with adjustable fade rates. Photocell inputs may provide thresholds to create dimming setpoints and fade rates.

10. Diagnostic Aids: Each control panel shall incorporate diagnostic aids for confirmation of proper operation or, in case of failure, to guide the individual in rapid troubleshooting of the system.

a. The control panels shall employ Light Emitting Diodes (LEDs) that visibly indicate:

POWER
SYSTEM OK
ON/OFF STATUS OF EACH RELAY
SYSTEM CLOCK AND DATE
PROGRAMMING CONFIRMATION (TOD, Holiday, ON/OFF and PRESET)

b. Control systems that do not provide visual self-help diagnostics shall not be acceptable.

11. Battery Back-Up: The system shall utilize a memory back-up device that is system integrated and shall be non-serviceable. The data in RAM shall be protected against power interruptions lasting as long as 7 days. The power interrupt protection circuit shall be entirely maintenance free.

12. Multi-Tapped Transformer: The control panel shall incorporate the use of a multi-tapped transformer. The panel shall not require specification of voltage for each control location. The voltages of 120 and 277 VAC shall be available with each standard control panel.

13. Status Indication of Relays: The system shall provide visible status indication of all relays through the window of each control panel. The visual indication shall disclose ON/OFF status and relay number.

14. Service Override: The control panel shall provide a three-position service override for the entire panel. The service override shall not be accessible from the exterior. The master service override provides a single three position switch with the option of “ALL ON”, “AUTO”, and “ALL OFF” respectively. This master switch shall operate all of the relays in the controller and shall override and supersede all commands from the logic board. The controller shall remember the last command of the individual relays and return then to that state upon return of the switch to “AUTO.”

15. Lockable Enclosure: Each control panel shall be enclosed in a lockable NEMA Class 1 enclosure. The enclosure shall be manufactured out of 1/16-inch steel and shall provide a pre-punched knockouts for efficient installation.

16. Panels: The low voltage control system shall consist of panels that may be configured in groups of eight. A control panel may be configured to have 8, 16, 24, and 32 20-amp rated relays at 277 VAC.

17. Telephone Overrides (TIM): The control system shall provide intelligent software for the Telephone Interface Module (TIM) option. The TIM unit shall allow modem communications and touch-tone overrides from any touch-tone phone. The control system shall permit one TIM per lighting control panel.

    a. Touch-tone interface shall permit the control panel to override the preassigned control points ON/OFF accordingly. All user interface shall be through the 12 touch-tone keys on the telephone. All entries into the override system shall be prompted by a digitized voice. Systems are employing voice-guided override instruction are not acceptable.

    b. The TIM shall provide individual control passwords. Each password shall allow a preset group control for after-hour overrides.

18. PC-Based Interface (Supervisor): Provide PC based programming software. PC based software shall enable any MS-DOS PC to program any lighting control panel connected to the network. The PC connection shall be an RS-232 direct connection to the lighting control panel at 9600 baud. The optional software package shall allow individual panel programming to be executed locally or remotely through a 1200/2400 baud modem. The central programming software shall permit the user to modify the control panel programming or configuration on an "OFF-LINE" mode. This software package shall store all programmed data and archive for future use. Systems using third party software are not acceptable.

    a. The following features shall be standard in the PC based software:

        1) Standard Software Features:

            a) Real Time Relay Status Monitoring

            b) Alpha-Numeric Descriptors

            c) Telecommunications

            d) Network Status Indication

            e) Global Software Modifications

            f) Manual Relay Commands

            g) Remote Pattern Commands

            h) Preset Options

        2) File Maintenance:

            a) Archive Programs

            b) Data Base Restoration

            c) Uploading and Downloading of Programs

b. The Supervisor software package shall be capable of operating on any MS-DOS (3.0 or greater) operating system. Minimum computer requirements shall be an RS-232 asynchronous serial port, printer port, monitor, keyboard, 640K of internal RAM, and a hard disk, 20 MEG is recommended. Software package shall permit the PC to be utilized for other functions (i.e. word processing, data-base, etc.) besides solely for lighting control programming. Software is 100% IBM PC compatible. Systems which require an "on-line" dedicated computer for control system operation shall not be acceptable.

19. PC Interface (RS-232 port): The controller shall permit PC programming through provided software. The controller shall provide a RJ-11 connection for RS-232 programming. Programming shall be permitted through either a local connection or remotely through a modem. PC software shall permit multiple file storage for data archival and for seasonal facility requirements. Operator commands may be issued directly from the PC keyboard.

    a. The controller shall provide either a DB25 or a RJ-11 (6 wire) connector for RS-232 communications.

20. Network (RS-485): The control system shall have panel-to-panel communications over a high-speed hard-wired data network. The network shall consist of twisted pair of wire utilizing the RS-485 communication standard. The network shall communicate a 19.2K baud and employs circuit protection. The network shall support a maximum of 127 control panels. This communication standard and baud rate shall allow a maximum distance of 2000 feet for panel-to-panel communications. The recommended wire is Belden #9843 or equivalent.

21. Low Voltage Switches and Wiring:

    a. Switches:

        1) Momentary contact switches shall be Leviton Momentary Contact Decoratype-5657-2W with matching 302 stainless steel covers.

        2) Momentary contact switches shall be GE type push button switches #RS2-32 non-lighted, RS2-32-P lighted with stainless steel plate #RP2-116/RPB2-1 for single-gang, 1 switch, #RP2-126/RPB2-1 for single-gang, 2 switches, #RP2-236/RPB2-2 for two-gang, 3 switches, #RP2-246/RPB2-2 for two-gang, 4 switches.

        3) Momentary contact switches shall be GE type single pole, double throw, center off heavy-duty toggle switches #GE-5935-2G with matching 302 stainless steel covers.

b. Wiring: Wiring to each low voltage switch shall be shielded multi-conductor cable with (3) #20 AWG solid conductor wires. With lighted switch card add extra conductor.

PART 3 - EXECUTION

3.01 EQUIPMENT INSTALLATION AND DOCUMENTATION

A. Installation: The control system shall be installed and fully wired as shown on the plans by the installing Contractor. The Contractor shall complete all electrical connections to all control circuits and override wiring.

B. Documentation: The Contractor shall provide accurate "as-built" drawings to the Owner for correct programming and proper maintenance of the control system. The "as-builts" shall indicate the load controlled by each relay and the relay panel number.

C. Operation and Service Manuals: The factory shall supply all operation and service manuals as related to the design of the control system.

3.02 PRODUCT SUPPORT AND SERVICE

A. Factory Support: Factory telephone support shall be available at no cost to the Owner. Factory assistance shall consist of solving programming or application questions concerning the control equipment. The factory shall maintain toll-free numbers for technical support for their customers.

3.03 SYSTEM ACCEPTANCE

A. The Contractor is responsible for complete installation of the system according to strict factory standards and requirements. The following items shall be included requirements:

1. All system equipment shall operate in accordance with specification and industrial standard procedures.

2. An operational user program shall exist in the control system. The program shall execute and perform all functions required to effectively operate the site according to the requirements.

3. Demonstration of program integrity during normal operation and pursuant to a power outage.

4. Contractor shall provide a minimum of three hours training on the operation and use of the control system. Additional support services shall be negotiated between the Contractor and the building Owner or manager.

3.04 WARRANTY

A. Warranty: Manufacturer shall supply a two-year warranty on all hardware and software. A limited 10-year warranty shall be provided on the standard relay card.

END OF SECTION

SECTION 26 2413

SWITCHBOARDS

PART 1 - GENERAL

1.01 RELATED DOCUMENTS

A. Section 26 0000 – Electrical General Conditions

1.02 WORK INCLUDED

A. Provide all service entrance and main distribution switchgear with equipment as shown and described, with continuous full load ampacities as indicated.

PART 2 - PRODUCTS

2.01 ACCEPTABLE MANUFACTURERS

A. Square-D

B. General Electric

C. Cutler-Hammer

D. Siemens

2.02 ENCLOSURES

A. Shall be freestanding, steel with steel angle or channel framework of adequate strength and rigidity necessary to resist all conditions of use to which it may be subjected and to support all equipment, devices and appurtenances contained therein. Front plates shall be installed in sections so that all parts of the board are front accessible without disturbing other parts. A removable lifting angle shall be provided at the top and bottom of each shipping section(s).

B. Minimum 12-gauge steel, except front panels and doors may be minimum 14 gauge.

C. Shall be front access only unless noted otherwise.

D. Provide on 3-inch housekeeping concrete pad with minimum 3-inch lip on front and sides.

E. Finish shall be factory applied; standard gray color for all exterior and interior painted surfaces. Other colors may be considered.

F. Outdoor installation shall be NEMA 3R.

2.03 SWITCHBOARD DIMENSIONS

A. Overall height of switchboards shall not exceed 90 inches (not including base channels). Length and depth shall not exceed dimensions as scaled or noted in contract documents. Manufacturers whose equipment dimensions exceed those indicated shall notify the Engineer in writing 10 days prior to bid date. These Manufacturers may not bid as "Not Conforming to Contract Documents". Contractor shall base bid only on equipment which fully complies with contract documents. Cost of building modifications or switchboard relocations, if permitted, or other additional work required to fit larger size switchboard(s) than shown on drawings shall be borne totally by the Contractor.

2.04 SWITCHBOARD BUSBARS

A. Aluminum or copper at manufacturer's option, factory fabricated; carried to terminals for connection to service cables or busway. Brace switchboard components for symmetrical fault current shown plus a symmetrical offset (50,000-amp bracing minimum). Aluminum bus shall be tin plated over its full length.

B. Busbar Joints:

1. Busbar to busbar shall be bolted, lapped and silver or tin plated, having low contact resistance and low temperature rise. For aluminum bus bolt using Grade 5 bolts with Belleville washers.

2. Overcurrent devices shall be bolted to busbars using Grade 5 bolts and Belleville washers. Exception: Square-D I-line and 30-200A fused switches

C. Conductor connectors shall be bolted to busbars using Grade 5 bolts and Belleville washers. Where aluminum conductors are utilized for feeders the connectors shall conform with Section 26 0519.

D. System of Bussing: Three phase, 4 wire, full size neutral unless otherwise noted.

E. Ground Bus: Full length ground bus bonded to frame conforming to U.L. 891 for minimum size except larger as required by the code for grounding neutral conductor.

2.05 SWITCHBOARD COMPONENTS

A. Switchboards shall include (but not limited to) the following components:

1. Shall be full-fault current rated, series rating of devices is not allowed.

2. Switches and fuses or breakers as shown. If fuses are used, provide all necessary fuses and spares per Section 26 2813.

3. Space for future switches or breakers as shown including complete bussing and required hardware for mounting devices. Space for metering and instrumentation components, and current limiters (when required).

4. Miscellaneous appurtenances as required for a complete installation.

5. Cleats for securing all conductors.

B. When Serving as Service Entrance Equipment:

1. Shall conform to UL 869 and have a Service Entrance Type UL label

2. Shall be full-fault current rated, series rating of devices is not allowed. See drawings.

3. Where utility company metering equipment is shown, provide current transformer space, meter base(s), metering conductors and miscellaneous appurtenances as required by serving utility.

4. Shall contain surge arrestors on all phases for voltage surge protection on secondary (under 600V) electrical wiring systems. Similar to Square-D, J9200.

C. Digital Line Meter/Monitor **(Spec Writer) this may add size to the switchboard, please verify)**

1. Provide a digital line Meter / Monitor device equal to Cutler-Hammer type IQ DP-4000 Series having the features and functions specified below. The Meter / Monitor device shall consist of a single microprocessor-based unit capable of monitoring and displaying the functions listed below with the accuracy indicated; the MM4 shall auto range between units, kilounits and megaunits. The Meter / Monitor device shall provide the adjustable protection functions indicated and the capability to communicate data via twisted pair network. The MM4 shall be UL listed, CUL and CE certified and also meet ANSI standard C37.90.1 for surge withstand.

Metered Values	**Alarm Functions (Accuracy % Full Scale)**
AC Phase Amperes +/- (0.3%)	Voltage Phase Loss
AC Phase Voltage +/- (0.3%)	(less than 50% rms)
Watts +/- (0.6%)	Current Phase Loss
VA +/- (0.6%)	(1/16 largest phase)
vars +/- (0.6%)	Phase Voltage Unbalance
Power Factor 1.0% (+/- 1 digit)	(5 to 40% – 5% steps)
Frequency +/- (0.1 Hz)	Phase Voltage Reversal
Watthours +/- (0.6%)	Overvoltage
varhours +/- (0.6%)	(105 to 140% – 5% steps)
VA hours +/- (0.6%)	Undervoltage (95 to 60% – 5% steps)

Metered Values	Alarm Functions (Accuracy % Full Scale)
Watt Demand with 10-, 15-, 20-, 25-, 30-, 45-, 60-minute interval) %THD (through 31st harmonic) Voltage – minimum/maximum Current – minimum/maximum Power – minimum/maximum Power Factor – minimum/maximum Frequency – minimum/maximum Peak % THD Peak Demand	Time Delay for Overvoltage, Undervoltage, and Phase Unbalance (0 to 20 seconds – 1-sec. steps)

2. Input ranges of the Meter / Monitor device shall accommodate external current transformers with ranges from 5/5 through 12,800/5 amperes. Provide external current transformers sized for incoming service. Potential transformers shall be self included and fused up to 600 volts. Above 600 volts, provide fused external potential transformers.

3. Control power shall be capable of being supplied from the monitored incoming AC line without the need for a separate AC supply control circuit or separate remote power source (96 to 264V AC or 100 to 350V DC) where shown on the drawings.

4. Provide the following features:

   a. Synchronizing pulse input shall be provided, and when activated, shall override the preset watt demand interval and let the utility control the demand window.

   b. Load shed feature, which activates the pulse initiation relay when a user selected parameter exceeds a pre-programmed range.

   c. Outputs shall have separate Form C (NO/NC) trip and alarm contacts with ratings of 10 amperes at 115/240V AC or 30V DC resistive. In addition, provide a separate Form C (NO/NC) contact to provide a programmable kilowatt-hour pulse output. The pulse shall be KYZ type.

5. Provide an addressable communication card capable of transmitting all data, including trip data over a compatible two-wire local area network to a central personal computer for storage and/or printout. The network shall also be capable of transmitting data in RS-232c format via a translator module.

D. Ground Fault Protection: Provide the following ground fault protection equipment on breakers (switches) rated 1000 amps or more, and as indicated.

1. A current transformer (also called a sensor or current monitor) installed and connected to indicate the sum of all phase and neutral currents. (Zero sequence method). A current transformer on the grounding conductor is not acceptable.

2. A current transformer (also called a ground break relay) operated by the current transformer. Trip point shall be adjustable (calibrated scale indication) from 20% to 60% of the breaker or switch rating (or 1200 amps whichever is lower). The sensor shall also include an adjustable time delay (calibrated scale indication) from .1 second to .4 second (approximately).

3. A monitor or test panel whose functions shall furnish a means to test the ground fault system; monitor to control voltage; indicate when the sensor has tripped the breaker (switch); and reset the system.

4. A trip device on the breaker or switch operated by the ground fault sensor.

E. Ground current meter and current transformer similar to Square-D #EA1GG/GF1 with current transformer on the neutral bonding jumper.

2.06 NAMEPLATES

A. Nameplates shall be installed on all switchboards. Each individual switch shall be identified with a nameplate adjacent to the switch, describing the load connected.

B. Provide a service entrance label nameplate on the main switchboard which includes the following:

1. Architect

2. Electrical Consultant

3. Electrical Contractor

4. Date of Installation

5. Service Voltage & Bus Amperage Rating

6. Symmetrical Short Circuit Current Rating

7. Year of Manufacture

C. Lettering size shall be suitable for the size of plate and information contained. Nameplates shall be engraved plastic (3/8-inch high minimum letters). Attach with stainless steel screws.

D. Nameplate color shall be: Emergency System - white on red, normal System - white on black.

E. Provide a riser diagram drawing using non-fading ink and mylar installed under glass and attached to the exterior of the main switchboard showing feeder runs, panels, transformers and raceway sizes.

2.07 SINGLE PHASING SENSORS

A. Provide single phasing sensors to trip the main switches in the event of a single-phase failure.

2.08 CLEATS

A. Provide for securing all feeder cables within the switchboard.

PART 3 - EXECUTION

3.01 MOUNTING

A. Shall be bolted to floor using 1/2" x 8" (minimum) black mild steel foundation anchor J-bolts and anchored similarly to building structure to prevent overturning in the event of earthquake. Provide 3" thick structural concrete "housekeeping pad". J-Bolts in the floor shall be set in the structural floor and extend through the housekeeping pad with sufficient threads to attach the switchboard.

3.02 WIRING

A. Shall conform to applicable Sections of these specifications.

B. Shall be secured to switchboard enclosure with cleats. Maximum spacing shall not exceed 24 inches.

3.03 SPACE

A. Verify space available with equipment sizes and code required working clearances prior to submittals of shop drawings

3.04 GROUNDING

A. Provide pursuant to Section 26 0526.

3.05 UTILITY REQUIREMENTS

A. When service switchboard includes utility company metering equipment, provide all devices and wiring to meet serving utility requirements.

3.06 TESTS

A. Torquing requirements and installation of all terminations 1,000 amps and above shall be certified by an independent testing agency.

3.07 PULSE OUTPUT FOR REMOTE METERING, SINGLE PHASE, UNDER/OVER VOLTAGE OUTPUT

A. Provide programming of the digital meter assembly and provide all necessary components to supply a calibrated pulse output signal and a single phase, under/over voltage signal to interface with the EMCS system. Programming shall be provided by a factory authorized representative. Coordinate with the EMCS Contractor as required for complete operation.

END OF SECTION

SECTION 26 2416

PANELBOARDS

PART 1 - GENERAL

1.01 RELATED DOCUMENTS

A. Section 26 0000 – Electrical General Conditions

1.02 WORK INCLUDED

A. Provide all panelboard equipment, complete; dead front type.

PART 2 - PRODUCTS

2.01 PANELBOARD TYPE

A. Panelboards shall be rated at proper voltage and current for intended use with busbars of copper or aluminum. Panels shall be 3-phase, 4-wire, 100% neutral, unless noted otherwise. Where aluminum is utilized, all lugs shall be of an approved compression type. Provide multiple lugs where conductors in parallel or "feed through" are shown on the Drawings.

B. Conductor Connectors shall be bolted to busbars using Grade 5 bolts and Belleville washers. Feeder conductor connectors shall be rated for 75 Degree C. wire when 75 Degree C. wire is indicated. Where aluminum conductors are utilized for feeders or branch circuits the connectors shall conform with Section 26 0519.

C. Panelboards shall have a separate ground bus bonded to the panelboard frame.

D. Where 120-Volt, 15- or 20-Amp breakers are intended for switching loads they shall be of type rated for switching duty labeled "SWD."

2.02 ACCEPTABLE MANUFACTURERS

A. General Electric

B. Square-D

C. Siemens

D. Cutler-Hammer

2.03 CIRCUIT BREAKERS

A. The following interrupting capacity, 10,000 AIC Symmetrical shall be considered minimum. Other ratings shall be as specified on panel schedules shown on the Drawings. Series rating of breakers is not allowed.

B. Mount breakers in all panelboards so that breaker handles operate in a horizontal plane. Bolt in type only. Provide common trip on all multiple pole breakers.

C. Where noted, provide spare breakers, complete for future connection of wiring circuits. Where "Space" is indicated for breakers, provide all bussing and breaker mounting hardware in the panelboard, provide steel knockouts in dead front metal closure of unused part of panel. If any steel knockouts are removed, provide breakers in such spaces or approved cover plates. Open spaces are not permitted.

D. For multi-wire branch circuits, provide approved breaker handle ties where required by NEC 210.4.

E. An Arc-fault circuit interrupter shall be provided for all receptacles, lighting fixtures, and smoke detector in bedrooms/living units.

2.04 CABINET FOR EACH PANELBOARD

A. Flush or surface, as indicated; tight closing doors without play, when latched. Where two cabinets are located adjacent to each other in finished areas, provide matching trim of the same height. Where a remote-controlled switch or contactor is mounted in any panelboard, mount on same frame as panelboard interior with screw retained access door in dead front shield; common door over circuit breakers and remote-controlled device. Where flush mounted, provide (2) 3/4" conduits to accessible ceiling space for future expansion.

B. All conduits for future expansion shall stub into a junction box, where located above grade, and shall be sealed in the panel.

C. Provide cabinets of sufficient dimensions to allow for future expansion and addition of circuit breakers within the panelboards as indicated on panel schedules.

D. Provide cabinet front with full-height hinged door. One door over the interior and an additional hinged dead front cover over interior and wireway (door-in-door). Full-height front cover hinged to box with concealed trim clamps. Provide flush door locks.

E. Provide lock for each cabinet door. All Electrical Distribution Equipment Locks shall be keyed identically. Key system shall match existing. Supply Owner with minimum six keys.

F. Fasten panelboard front with machine screws with oval counter-sunk heads, finish hardware quality, with escutcheons or approved trim clamps. Clamps accessible only when dead front door is open are acceptable. Surface mounted panelboards with fronts greater than 48 inches vertical dimension shall be hinged at right side in addition to hinged door over dead front.

G. Finish: Provide factory prime coat for cabinets to be located in finished areas. Where cabinets are located in unfinished areas, standard lacquer or enamel finish, gray or blue-gray color, shall be substituted for factory prime coat.

2.05 SYSTEM OF NUMBERING AND BUS ARRANGEMENT

A. Shall be as shown on the Panel Schedules on the Drawings.

2.06 PANELBOARD NAMEPLATE

A. Provide engraved and filled (or color layer - engraved through outer layer) plastic nameplate with ½-inch high characters (for panel name); attached with screws to each NEMA 1 panelboard front. White on black, include voltage, phases, wires and minimum A.I.C. Rating in 3/8-inch characters.

B. Nameplate color shall be:

1. Emergency System: White letters on red

2. Normal System: White letters on black

C. Provide a service entrance label nameplate on the main panelboard which includes the following:

1. Architect

2. Electrical Consultant

3. Electrical Contractor

4. Date of Installation

5. Service Voltage & Bus Amperage Rating

6. Symmetrical Short Circuit Current Rating

7. Year of Manufacture

D. Provide a riser diagram drawing using non-fading ink and mylar installed under glass and attached to the exterior of the main panelboard showing feeder runs, panels, transformers and raceway sizes.

PART 3 - EXECUTION

3.01 MOUNTING

A. Secure in place with top of cabinet at 6'-0", unless otherwise noted. Top of cabinet and trim shall be level. Firmly anchor cabinets directly or with concealed bracing to Building Structure. When panels are not located in or directly on a wall, provide a support frame of formed steel channel which is anchored to the floor and Ceiling Structure. Interiors shall not be installed until Structure is totally enclosed. Where panels are mounted adjacent to each other, the top edges shall be at the same height.

3.02 CIRCUIT INDEX

A. For each branch circuit panelboard provide a typewritten index listing each circuit in the panelboard by number with its proper load designation. Mount with a transparent protective cover inside cabinet door. Listing shall match circuit breaker arrangements, typically with odd numbers on the left and even numbers on the right. Room numbers used shall be final room numbers used in the building as verified with the Owner, and not room number assigned on Plans.

3.03 CABINET PAINTING

A. Cabinets furnished as prime painting shall be field painted to match color of adjacent wall. (See Division 09 - Painting).

3.04 SPACE

A. Verify space available with equipment sizes and Code Required Working Clearances prior to Submittal of Shop Drawings.

3.05 GROUNDING

A. Provide separate ground busbar for all panels supplying isolated ground circuits.

3.06 FEED THROUGH AND DOUBLE LUGS

A. Provide feed through or double lugs with amperage equal to the incoming feeder amperage unless shown as larger.

END OF SECTION

SECTION 26 2419

MOTOR CONTROLLERS

PART 1 - GENERAL

1.01 RELATED DOCUMENTS

A. Section 26 0000 – Electrical General Conditions

1.02 WORK INCLUDED

A. Work under this section includes all requirements for motor controls to be furnished under the electrical portion of the work on all electrical motor driven equipment. Individually mounted starters shall be provided by Division 26 Contractor. Motor controls shall conform to NEMA Standards for each specific purpose.

B. The Division 26 Contractor shall furnish all motor controllers not included with equipment furnished under other divisions of these specifications or by Owner. The Division 26 Contractor shall install all motor controllers including all controllers not factory assembled into equipment furnished under other divisions of these specifications or by Owner.

1.03 MOTOR VOLTAGE INFORMATION

A. Voltages available are 480 Volt, 3 phase or 208 Volt, 3 Phase, and 115 Volt Single Phase.

B. Circuits are designed (in general) for motors as follows:

1. Smaller than 1/2 H.P. - 115 Volts, Single Phase 1/2 H.P. and larger - 460 or 200 Volts, 3 Phase

C. Verify motor sizes and voltages provided under other divisions and notify General Contractor immediately if any discrepancies are noted.

1.04 REGULATORY REQUIREMENTS

A. Provide motor protection switches of the appropriate NEMA size. For units not using NEMA rating, use equivalent NEMA size.

PART 2 - PRODUCTS

2.01 MOTOR STARTERS

A. Magnetic Motor Starters: Unless noted otherwise, shall be full voltage non-reversing with three overloads sized to suit nameplate amperes of motor served, motor "On" and "Off" pilot lights, "Hands-Off-Auto" switch, and auxiliary contacts for interlocking.

B. Combination Motor Starter/Disconnect: Shall be fused switch type with all features of Paragraph A above. In addition, provide disconnect switch auxiliary contacts for disconnection of externally powered control circuits where applicable. Fuses shall be sized in accordance with motor manufacturer's requirements.

C. Manual Starters: Shall be toggle switch or push-button type, lockable in the "Off" position, with overload relays, pilot light and enclosure pursuant to Paragraph D below. Manual starters shall only be used where specifically shown or called out on the drawings and only for single phase, fractional horsepower motors.

D. Enclosures: All motor controllers shall be contained in an enclosure suitable for the environment in which the controller is mounted, and shall be weatherproof when exposed to weather.

E. Overload Devices: Shall be melting alloy or bimetallic type. One overload shall be provided for each phase. Provisions shall be made for resetting the overload devices from outside the starter enclosure. Provide ambient compensated overload devices only when the motor is at a constant temperature and the controller is subject to a separate, varying temperature. Automatic reset overload devices are not permitted.

2.02 ACCEPTABLE MANUFACTURERS

A. Square D

B. Allen Bradley

C. General Electric

D. Cutler-Hammer

E. Siemens

2.03 MOTOR CONTROL CENTERS

A. Motor Control Centers shall consist of one or more enclosed vertical sections jointed together to form a rigid, free standing assembly. The construction of the Motor Control Center shall meet the requirements set forth by U.L. 845, NEMA number ECS-2-322 and the N.E.C. The enclosure shall in accordance with NEMA standards type 12. Wiring shall be Class II Type B. Terminal blocks shall be conventional track mounted.

2.04 NAMEPLATES

A. Pursuant to Section 26 0000, Paragraph 2.05, provide nameplates permanently attach (with screws on NEMA 1 enclosures) on each controller, nameplates with the following information: Load served, voltage, phase, short circuit rating, panel/circuit number and where applicable fuse size and type.

2.05 FAN SHUTDOWN RELAYS

A. Contractor shall provide relay(s) with sufficient contacts to shutdown all fans over 2000 cfm upon receipt of Fire Alarm. See Section 28 3100. Coordinate coil voltage with Fire Alarm System Supplier.

2.06 POWER FACTOR CORRECTION

A. Provide power factor correction capacitors for all motors 25 horsepower and above. Capacitor size when indicated on the drawings is an approximation only. Final size shall be determined by the Contractor based on the recommendations of the motor manufacturer to bring the power factor to between 0.9 and 0.95. All capacitors are to be fused, with blown fuse indicators mounted on the front of the unit. Provide discharge resistors when required by code.

PART 3 - EXECUTION

3.01 FINISHED AREAS

A. In finished areas, mount motor protection switches flush and install suitable coverplates.

3.02 HEATERS

A. Install heaters co-related with full-load current of motors provided.

3.03 OVERLOADS

A. Set overload devices to suit motors provided.

3.04 SUPPORTS

A. Securely mount to equipment, wall or acceptable mounting frame.

3.05 FAN SHUTDOWN WIRING

A. Provide wiring interlock connections for all (over 2000 cfm) fan starter control circuits via Division 23 furnished fan shutdown relay to shutdown fans upon receipt of Fire Alarm.

3.06 FAN SHUTDOWN WIRING

A. Provide wiring interlock connections for all (over 2000 cfm) fan starter control circuits via a relay to shutdown fans upon receipt of Fire Alarm.

3.07 CONNECTION TO MECHANICAL EQUIPMENT ON ROOFS

A. The Contractor shall coordinate all roofing penetrations with the general contractor and roofing contractor to assure that the roofing warranty is maintained.

B. Attachment of conduits to the roof to serve mechanical equipment and devices shall comply with Section 26 0533.

3.08 MECHANICAL EQUIPMENT NAMEPLATE RATINGS

A. The Division 26 Contractor shall verify that the nameplate ratings of the mechanical equipment, when they arrive on site, are consistent with the ampacity called out on the drawings. The Contractor shall bring any discrepancies to the Engineers attention prior to installation of conduit and wiring.

END OF SECTION

SECTION 26 2726

SWITCHES AND RECEPTACLES

PART 1 - GENERAL

1.01 WORK INCLUDED

A. Provide all wiring devices and plates.

B. No push-in terminals allowed.

C. All devices color shall be white, unless otherwise noted.

PART 2 - PRODUCTS

2.01 ACCEPTABLE MANUFACTURERS

A. Hubbell

B. Pass & Seymour

C. Leviton

D. Cooper

2.02 SWITCHES

A. Emergency Push-Button Switches: Provide a red emergency push-button, momentary contact, yellow enclosure with clear plastic cover. Reset shall be by twisting the push-button.

1. For Shut-Down of Boilers: Switch shall be connected through an auxiliary contact tied to the boiler power supply. Label shall read: “Boiler shut-down”. The switch shall be located adjacent to an exit door.

2. Approved Manufacturer: STI – Safety Technology International.

B. "Industrial Specification Grade", quiet type, rated 277-volt, 20 amp, unless noted, with plastic handle. Single pole, double pole, 3-way, or locking type as required. Meets Fed. Spec. WS-896 Provide matching styles and colors in other devices as required for the conditions of installation. Hubbell CSB120, Eaton CSB120, Leviton 1221, and P&S 20AC1

C. Interchangeable type shall be rated same as above.

D. LED Dimmer: LED 0-10V dimmer switch shall be compatible with supplied LED board and driver. Dimmer switch shall have vertical slide with a positive “on/off” button. Dimmer shall have high and low end, field adjustable trim setting. Provide with associated power pack for control. Lutron Diva or approved equal.

E. Momentary Contact Line Voltage Switches: Single pole, double throw, 3-wire, normally open. Rating same as above.

F. Magnetic Low-Voltage Dimmer: Dimmer switch shall be listed for use with magnetic low-voltage light fixtures. Dimmer switch shall have a vertical slide with a positive “off” button. The dimmer shall be rated for a minimum of 1500VA. Dimmer shall have a radio/TV interference filter. Leviton ‘Renoir’ series.

G. Incandescent Dimmer: Incandescent dimmer switch shall be rated at 2000 watts, 120-volt, 60 hertz. Dimmer switch shall have a vertical slide with a positive “off” button. Dimmer shall have a radio/TV interference filter. Leviton ‘Renoir’ series.

H. Fluorescent Dimmer: Fluorescent dimmer switch shall be rated at 1200VA (900 Watts maximum loading), 120V or 277V, 60 hertz. Dimmer switch shall have a vertical slide with positive “off” button. Suitable for single-pole and 3-way. Dimmer shall have a radio/TV interference filter. Dimmer shall be matched with electronic dimming ballast. See specification section 16500. Leviton ‘Renoir’ series.

I. Key Operated: Hubbell HBL1221L (or equal) with 1209 Key. Provide 24 spare Keys.

J. Timer Switch: Provide electronic light timer switch where indicated on drawings. The timer switch shall be connected to the room lighting and fan. The timer switch shall be programmable for time-out from 5 minutes to 2 hours. Set timer for standard 20 minutes time-out period, time scrolls up, flash off, beeper on. Manufacturer: Watt Stopper – Inteli-switch Digital Time Switch.

K. Motor rated switches: Switches serving as motor disconnecting means shall be horsepower rated with overload relays and meet requirements as stated above. See manual starters in Section 26 2419, ‘Manual Starters’.

L. Combination AFCI/Switch: 15 amp rated, 20-amp feed-through, 125 Volt outlet branch circuit combination AFCI/Switch; back and side wired. Leviton AFSW1.

M. Device plates shall be Hubbell and Cooper Type 302 stainless steel.

2.03 RECEPTACLES

A. In All Unfinished Areas & Non-Occupy Able Spaces: Provide "Industrial Specification Grade", Duplex NEMA 5-20R configuration (20-Amp, 120-Volt) unless shown otherwise. Must have “rivetless ground” contact manufactured as an integral component of the external ground screw terminal. Meets Fed Spec. WC-596 Hubbell HBL5362, Cooper 5362, P&S 5362A, and Leviton 5362.

B. In All Finished Areas: Provide heavy duty specification grade; general purpose 20 amp. 125-volt, Nema 5-20R, 2P, 3W decora plus duplex receptacle, straight blade, commercial grade, self-grounding, back & side wired. Leviton 16352

C. Self-Testing Ground-Fault Circuit-Interrupter (GFCI) Duplex Receptacles: 20A. 125V AC; 2-pole, 3 wire grounding; 10,000 amps current interrupting; green light indicator when power is ‘on’; red light indicator when device is in the tripped position; Red “EOL” (end of life) indicator with rapid flash when the unit has reached end of life and/or cannot provide GFCI protection. Provide GFI receptacles where required by code.

D. Faceless Self-Testing Ground-Fault Circuit-Interrupter Device: 20A. 125V AC; 2-pole, 3 wire grounding; 10,000 amps current interrupting; green light indicator when power is ‘on’; red light indicator when device is in the tripped position; Red “EOL” (end of life) indicator with rapid flash when the unit has reached end of life and/or cannot provide GFCI protection. Provide faceless self-testing ground fault device ahead of switched receptacles that require GFI protection per code. Mount device in same backbox as the device it is protecting.

E. Dedicated Computer Receptacle: Duplex NEMA 5-20R configuration, grey in color. Leviton 5362G, and Cooper IG5362.

F. Tamper resistant receptacle & USB charger: Duplex 20 Amp; 125V; 3.6-amp USB charging capability. Leviton T5832

G. Switched Receptacles: Switched Receptacles: Switched receptacles shall be ‘green’ in color, smooth nylon face, with permanently marked for use with automatic control systems, back and side wired, decora style. Hubbell DR20C2GN or Hubbell DR20C2GNTR (Tamper Resistant) or Leviton G5362-2TN (GFCI)

H. "Hospital Grade", Duplex NEMA 5-20R configuration (20-Amp, 120-Volt) unless shown otherwise. Hubbell 8300-I, and Cooper 8300.

I. Tamper resistant, Duplex NEMA 5-20R Configuration: Hubbell BR20ITR, Leviton 5362-SGI, and Cooper TR8300, or Leviton TDR20 to match decora style installed in finished spaces per paragraph B above.

J. AFCI Tamper-Resistant Duplex Receptacles: 15 Amp. 125 volt; 20-amp feed-through, tamper resistant, AFCI; back and side wired. Leviton AFTR1.

K. Operating Room Ceiling Drop - NEMA L5-20R configuration (20 amp, 125V) receptacle U.L. listed for hospital use. Locking type Hubbell 23000-HG, and Cooper 23000. Provide ten (10) matching plugs.

L. X-Ray Receptacles - 50-amp, 2 pole, 3 wire, 250 Volt. A.C. grounding type with stainless steel coverplate assembly. Hubbell No. 25505, and Cooper 25505. Provide two (2) matching plugs.

M. Weather Resistant (WR) / Ground Fault Circuit-Interrupter (GFCI) Outdoor Duplex Receptacles: NEMA 5-20R. Hubbell GFTR201 or equal, for 20 Amp, 125-Volt AC.

N. Special Purpose Receptacles: For special purpose receptacles, see drawings for voltage, amperage, and phase. Provide with matching plug delivered to the Owner.

2.04 OCCUPANCY SENSORS

A. Provide self-adjusting occupancy sensor light switching devices for control of lighting in all rooms and offices shown on drawings. Sensors shall be ceiling or wall mounted to provide adequate coverage. Occupancy sensors shall be "Leviton", Model OSC20-M0W for ceiling mounting, OSW12-M0W for wall mounting, complete with OSP20-RD0 power pack and associated mounting hardware. Provide "Leviton" ODSOD-ID wall switch sensors where shown. Sensors shall be wired to maintain switching and circuits shown on drawings.

2.05 OCCUPANCY SENSORS

A. Provide occupancy sensor switch(es) for control of lighting in all rooms and offices shown on the drawings. Sensors shall be ceiling or wall mounted to provide adequate coverage. Occupancy sensors shall be "Watt Stopper", or approved equal. Wall mounted sensors shall be Model DT-300, complete with power pack and associated mounting hardware. Wall mounted sensors shall be model DT-200 complete with power pack and associated mounting hardware. Combination occupancy sensor/switch shall be WA200. Combination occupancy sensor/switch, dual circuit shall be WA300. Sensors shall be wired to maintain switching and circuits shown on drawings.

2.06 OCCUPANCY SENSORS

A. Provide occupancy sensor switches for control of lighting in classrooms as shown on the drawings. Sensors shall be ceiling mounted to provide adequate coverage. Occupancy sensor shall be "Sensor Switch" Model CM-PDT-R, complete with power pack PP-20-20P, Auxiliary Relay SP-20-20P and associated mounting hardware. Sensors shall be wired and installed per manufacturer's direction to maintain switching and circuits shown on drawings. Where multiple sensors are located in an individual room, sensors shall be wired parallel with the relays such that either sensor will provide input to turn all lights on and reset time delay. Where occupancy sensors are shown on the drawings to be wall mounted, provide WSD or approved equal.

2.07 DEVICE PLATES

A. Interior: Plates for recessed boxes shall be Hubbell and Cooper Type 302 stainless steel. Attachment screws shall match finish of plate. Plates for surface mounted boxes shall be of pressed stainless steel with size to fit exactly the box used.

1. Where a duplex receptacle is indicated next to a USB receptacle, provide a dual-gang faceplate and mount both devices in the same backbox under the same faceplate.

B. Exterior: Intermatic # WP1010MC, for vertical mount and # WP1010HMC for horizontal mount, or equivalent for receptacles. Metal cover shall be raintight while-in-use.

2.08 LABELING

A. For NEMA 5-20r receptacles, each device shall be identified with a clear label with black typing stating the panel & circuit number.

B. For receptacles other than NEMA 5-20R, the coverplate shall have ampere rating, voltage and phase engraved on a phenolic label and attached to the cover plate.

2.09 MULTIOUTLET ASSEMBLY (WHEN SHOWN)

A. Provide assemblies complete, including necessary fittings and hardware with circuits as indicated on Plans and outlet spacing as indicated. All assemblies shall contain ground wire. Wiremold or equal.

2.10 SPARE DEVICES

A. Provide the following spare devices:

Device	Quantity
Single-pole switch	3
Duplex receptacle	5
Dedicated duplex receptacle	3
Isolated ground receptacle	4
GFI receptacle	3
20A, single-phase equipment connection	5
20A, three-phase equipment connection	3

B. Each spare device shall include 100 feet of conduit, wire, faceplate and labor; all as required for a complete installation. Location of these units to be determined by the Owner's representative at the site. Unused devices shall be turned over to the Owner.

PART 3 - EXECUTION

3.01 MOUNTING

A. Rigidly fasten each device to the outlet box at proper position with the wall to bring receptacle flush with plate or switch handle the proper distance through the plate.

B. Occupancy sensors that are ceiling mounted shall be located a minimum of 4’-0” away from a mechanical equipment diffuser.

3.02 ORIENTATION

A. Set Switches vertical with handle operating vertically, up position "ON" at +48" above finished floor.

B. Set Receptacles vertical with ground slot down at +18" above finished floor.

C. Set Exterior Receptacles horizontal at +18" above finished grade.

3.03 DEVICE PLATES

A. Shall be stainless steel for each new wiring device and for each telephone and signal equipment outlet, except where equipment mounted thereon covers the outlet box completely.

B. Provide new covers on existing outlet boxes being reused.

3.04 DIMMER SWITCHES

A. Provide a separate neutral for each phase.

B. Fluorescent dimmer switches require a 4 square backbox per switch.

3.05 RECEPTACLE GROUNDING

A. Provide bare bonding wire between receptacle grounding terminal and box. Plaster ear screws connecting frame to the box will not be acceptable for grounding.

B. Provide green insulated grounding conductor in all branch circuits supplying isolated ground and ground-fault circuit-interrupter type receptacles.

3.06 HANDICAPPED ACCESS

A. Comply with requirements of Washington State Handicapped Access Code.

END OF SECTION

SECTION 26 2813

FUSES

PART 1 - GENERAL

1.01 RELATED DOCUMENTS

A. Section 26 0000 – Electrical General Conditions

1.02 WORK INCLUDED

A. Provide all fuses as required. Provide three (3) spare of each size and type required. Fuses shall not be installed until equipment is ready to be energized. This measure prevents fuse damage during shipment of the equipment from the manufacturer to the jobsite or from water that may contact the fuse before the equipment is installed. Final tests and inspections shall be made prior to energization of the equipment. This shall include a thorough cleaning, tightening, and review of all electrical connections and inspection of all grounding conductors. All fuses shall be furnished by the Electrical Contractor. All fuses shall be of the same manufacturer.

PART 2 - PRODUCTS

2.01 MAINS, FEEDERS, AND BRANCH CIRCUITS

A. Circuits 601 to 6000 amperes shall be protected by current limiting BUSSMANN Low-Peak Time-Delay Fuses KRP-C. Fuse links shall be pure silver links (99.9% pure), delay and must hold 500% of rated current for a minimum of 4 seconds, clear 20 times rated current in .01 seconds or less and be listed by Underwriters Laboratories Inc., with an interrupting rating of 200,000 amperes r.m.s.

B. Circuits 0 to 600 amperes shall be protected by current limiting BUSSMANN LOW-PEAK Dual-Element Fuses LPN-RK (250 volts) or LPS-RK (600 volts). All dual-element fuses shall have separate overload and short-circuit elements. Fuse shall incorporate a spring activated thermal overload element having a 284°F. melting point alloy and shall be independent of the short-circuit clearing chamber. The fuse must hold 500% of rated current for a minimum of 10 seconds and be listed by Underwriters Laboratories, Inc., with an interrupting rating of 200,000 amperes r.m.s. symmetrical. The fuses shall be UL Class RK1 to maintain the Engineered protection of the system components.

C. Motor Circuits: All individual motor circuits with full load amperes ratings (FLA) of 480 amperes or less shall be protected by BUSSMANN LOW-PEAK Dual-Element Fuses LPN-RK (250 volts) or LPS-RK (600 volts). Larger H.P. motors shall be protected by BUSSMANN Type KRP-C Low-Peak Time-Delay Fuses of the ratings shown on the drawings. All other motors, (such as 1.0 service factor motors) shall be protected by BUSSMANN LOW-PEAK Dual-Element Fuses LPN-RK (250 volts) or LPS-RK (600 volts) installed in ratings of approximately 115% of the motor full load current except as noted above. The fuses shall be UL Class RK1 Dual Element Time Delay or Class L.

D. Fluorescent fixtures shall be protected by BUSSMANN Fuses GLR or GMF installed in HLR Holder. They shall have individual protection on the line side of the ballast. A fuse and holder shall be mounted within or as part of the fixture. Size and type of fuse to be recommended by the ballast manufacturer.

2.02 SPARE FUSES

A. Spare fuses shall be provided with a minimum of three of each ampere rating. See Section 26 5000 for quantities of spare fusing required for ballasted light fixtures.

2.03 ACCEPTABLE MANUFACTURERS

A. Bussman

B. Little Fuse

2.04 SPARE FUSE CABINET

A. Provide a spare fuse cabinet for the above-required spare fuses. Cabinet front and lock shall match panelboard equipment specified in Section 26 2416.

2.05 NAMEPLATE

A. Provide Nameplate "Spare Fuse Cabinet." Construct and attach in accordance with Section 26 2416, Paragraph 2.06.

PART 3 - EXECUTION

3.01 FUSES

A. Install in all fusible devices provided under this Contract.

3.02 SPARE FUSE CABINET

A. Locate in Main Distribution Switchboard Room or as shown on drawings.

END OF SECTION

SECTION 26 2816

DISCONNECTS AND FUSED SWITCHES

PART 1 - GENERAL

1.01 RELATED DOCUMENTS

A. Section 26 0000 – Electrical General Conditions

1.02 WORK INCLUDED

A. Provided all disconnects, fused and unfused, required by code for equipment furnished under this and other divisions of these specifications and as shown on the drawings.

PART 2 - PRODUCTS

2.01 ACCEPTABLE MANUFACTURERS

A. General Electric

B. Square-D

C. Siemens

D. Cutler-Hammer

2.02 DISCONNECTS

A. Switch shall be heavy-duty type, shall be quick-break and shall be horsepower rated. Switch shall have blades as required to open all ungrounded conductors and shall be single throw unless noted.

B. Enclosure shall have interlocking cover to prevent opening door when switch is closed. Door interlock shall include a defeating scheme, shall be padlockable in the "Off" position.

C. Enclosure shall be suitable for environment in which mounted. All exterior enclosures shall have a minimum raintight rating.

2.03 FUSED SWITCHES (OR FUSED DISCONNECTS)

A. Shall be as above with addition of fuse space and clips to accept only fuses as noted in Section 26 2813.

B. Fuses shall be provided in all fused disconnects.

C. Fuses shall be sized in accordance with manufacturer's requirements of protected equipment.

2.04 ELEVATOR POWER MODULE SWITCH

A. Provide Elevator Control Switch in a single NEMA enclosure with all necessary relay(s), control transformer and other options (as listed below), and as shown on drawings. The Elevator Control Switch shall have an ampere rating to accommodate the inrush current associated with the rated horsepower and include a fusible switch with shunt trip capabilities. The switch shall utilize Class J Fuses (provided separately under Section 26 2813). The following shall be included in the switch:

1. 100 VA control power transformer with primary and secondary fuses.

2. Isolation relay (3PDT, 10 amp, and 120V). The coil of the isolation relay shall be 120 Vac or 24 Vdc.

3. Normally open dry contact shall be provided for the Fire Alarm Safety System to energize the isolation relay and activate the shunt trip solenoid (140 VA inrush at 120V).

4. The switch shall include a 120-volt key to test switch and a 1-NO/1-NC mechanically interlocked auxiliary contact rated 5A, 120 Vac as standard.

5. “ON” Pilot Light (Green, Red or White).

6. Isolated Full Capacity Neutral Lug.

7. Fire Alarm Voltage Monitoring Relay (Needed to comply with NFPA 72).

8. Main Switch Auxiliary Contacts (1 NO/1 NC).

B. The module shall have been successfully tested to a short circuit rating with Bussmann® Low-Peak® Class J fuses at 200,000 amps RMS Symmetrical.

C. All switches shall have shunt trip capabilities at 120 Vac from remote fire safety signal.

D. Branch feeders shall be selectively coordinated and fed with an upstream supply over-current protective device at a minimum of 2:1 size ratio utilizing LOW-PEAK® (Class J, RK1, or L) fuses.

E. Approved Manufacturers: Cooper – Bussman; Eaton

2.05 NAMEPLATES

A. Provide nameplates on all enclosures and include the following information: Load served, voltage, phase, panel and circuit number. Construct and attach in accordance with Section 26 0000, Paragraph 2.05.

PART 3 - EXECUTION

3.01 SUPPORTS

A. Secure solidly to wall or approved mounting frame. Disconnects supported only by Raceway are not acceptable.

3.02 SPLICES

A. Wiring space within enclosure shall not be used as a junction box.

3.03 INSTALLATION

A. All material installation shall be in accordance with manufacturers' recommendations and the provisions of applicable codes.

B. Fuses shall not be installed until equipment is ready to be energized.

END OF SECTION

SECTION 26 3100

PHOTOVOLTAIC GRID INTERFACE SYSTEM (NO STORAGE BATTERIES)

PART 1 - general

1.01 RELATED DOCUMENTS

A. Section 26 0000 – Electrical General Conditions

1.02 GOAL

A. The design-build contractor is to provide, design and install a solar photovoltaic grid interface system as described within this specification.

B. The system is desired to be at a minimum 10,000 watt capacity of solar produced energy; Quantity and wattage of PV solar panels shall accommodate the desired total produced energy.

C. The system shall feed back on a 3-phase 120/208V distribution system.

D. The distribution and inverter equipment shall be located so as to be visible to students but protected from physical contact. This can be achieved with a vented enclosure with lockable clear plexiglass cover for visual interface to equipment, wire and connections.

1.03 GENERAL

A. The design-build contractor shall provide the design, procurement, installation and electrical work for the complete installation of the solar photovoltaic grid interface system as described herein and on the contract documents.

B. This specification defines the electrical and mechanical characteristics and requirements for a photovoltaic grid interface system. The system consists of solar panels, mounting hardware for solar panels, photovoltaic inverters, DC disconnect switches, AC disconnect switches, over current protection, connections to Owner furnished AC distribution system and web-based software program with graphics.

C. The design of the on-site solar PV system will be the responsibility of the Design-Build Contractor. This specification delineates the minimum technical and installation specifications required for this Project.

D. At least one major component of the solar photovoltaic system shall meet Washington State 5101 Program for renewable energy incentives.

E. The design-build contractor is under contract with the Owner through the building general contractor. The design-build contractor shall adhere to the State of Washington General Conditions & Supplementary Instructions in Division 1 of the building contract documents.

F. The Contractor shall notify the building electrical engineer of any requirements that are not already accommodated for in the building contract documents that affects the installation of the PV system.

G. The complete photovoltaic system shall be installed prior to June 30, 2009. This is due to the funding requirement for this system. The building electrical system may not be completely operational by June 30, 2009. This Contractor shall include in their bid final testing and system verification once the building electrical system is fully functional.

1.04 STANDARDS

A. It is the intent of these specifications to insure that the PV system installed adheres to any and all of the following:

1. Washington State Building Codes and standards

2. Washington State Solar Initiative program

3. Applicable utility rules and tariffs

4. Any and all technical and installation specifications and guidelines recommended by the manufacturers.

B. Bidders are advised to be familiar with all rules, requirements and specifications as they pertain to the installation of solar PV systems.

C. The systems shall be designed in accordance with applicable portions of the following standards:

1. American National Standards Institute (ANSI C62.41).

2. Institute of Electrical and Electronic Engineers (IEEE 519).

3. National Electric Code (NEC 2008) 690 Solar Photovoltaic Systems" and Article 705 – "Interconnected Electrical Power Production Sources".

4. UL 1703 – "Flat-Plate Photovoltaic Modules and Panels".

5. UL 1741 – "Standard for Static Inverters and Charge Controllers for use in Photovoltaic Systems"

6. Federal Communications Commission (FCC Part 15 A&B).

7. Systems must be designed and installed using UL or ETL listed components, including mounting systems.

8. IEEE 929-2000 – "Recommended Practice for Utility Interface of Photovoltaic Systems"

1.05 SUBMITTALS

A. The design-build contractor shall supply product documentation for the system to be installed, including wiring diagrams and cabinet outlines showing dimensions, weights, BTUs, input/output current, input/output connection locations and required clearances.

B. The manufacturer of the components for the system shall be a United States based manufacturer with 5 years experience or greater in design and fabrication of photovoltaic panels and inverters.

C. The Contractor shall furnish six (6) equipment submittal copies. Submittals shall be specific for the equipment furnished and shall include as-built information.

D. All documents and existing facility construction shall be reviewed by the design-build contractor. Any and all modifications necessary for the installation of the system shall be brought to the attention of the electrical engineer for the project.

PART 2 - products

2.01 MODULES

A. PV modules must comply with IEEE 1262 “Recommended Practice for Qualifications of Photovoltaic Modules”.

B. Panels shall be polycrystalline silicon type with tempered glass, EVA lamination and weatherproof backskin in black frame.

C. Provide all mounting hardware needed for the installation of the solar PV arrays.

D. Modules shall be high power, high efficiency and suitable for commercial application.

E. Approved Manufacturers: Sharp, Evergreen Solar

2.02 DC/AC INVERTERS

A. The inverter shall utilize real sine-wave technology and high frequency PWM.

B. Inverter Specifications:

1. AC Input voltage: 208V AC
2. AC Input frequency: 60 Hz
3. DC Input Voltage: 250-600V DC
4. Peak Efficiency: >95%

C. Provide with LCD Display, RS485 communications, integrated web server for remote online access to all current data from any PC and integrated FTP server for data storage.

D. Provide size and quantity of inverters necessary to achieve maximum performance and accommodate the PV arrays.

E. Provide a separate DC/AC inverter to accommodate the PV array on the tilt table.

2.03 COMBINER PANEL

A. Fuse/Breaker disconnect means for PV array strings.

B. Provide with Nema 3R enclosure.

C. Provide quantities as required to accommodate quantity of PV arrays.

2.04 METERS

A. Provide revenue grade Interval Data Recording (IDR) meters complete with industry standard telemetry for communication with Ethernet, cellular or other common output capabilities.

B. Provide connection to the building Energy Management System (EMS) for the purposes of metering, monitoring and data collection of solar production.

C. Meters must connect to a monitoring/data collection recording solar production through Time of Use (TOU) increments applicable to the local utility standards, with a minimum 15-minute intervals.

2.05 MONITORING

A. Provide fat spaniel technologies, Inc. Smart Monitoring. The system shall include:

1. Web-based views of how the solar electric system is working.

2. Automatic calculation on the reduction of greenhouse gas emissions.

3. Revenue-grade metering and reporting for Performance Based Incentives.

4. Provide with optional full weather station, that includes measuring of the following:

a. Sunlight strength

b. Air temperature

c. Solar module temperature

d. Wind speed and direction

5. Lobby kiosk display with web-based views implemented in flash.

2.06 PHOTOVOLTAIC PANEL(S) MOUNTING

A. Provide roof mounted PV array racking system with adjustable legs to optimize degree of tilt for maximizing PV array input.

B. Racking system shall be compatible with a membrane style roof and shall not void the manufacturer roofing warranty. Connection requirements for the racking system shall be reviewed and approved by the building structural engineer.

C. The racking system shall be suitable for the PV array to be provided.

D. Provide one (1) tilt table with remote control on roof. Table shall accommodate three (3) photovoltaic panels.

2.07 STRUCTURAL REQUIREMENTS

A. All structures and structural elements, including array structures, shall be designed in accordance with all applicable International Building Codes and standards pertaining to the erection of such structures.

B. The Contractor shall provide structural calculations, stamped by a licensed professional structural engineer in good standing with the State of Washington.

C. All structural components, including array structures, shall be designed in a manner to attain a minimum 30-year design life. Particular attention shall be given to the prevention of corrosion at the connections between dissimilar metals.

D. The structural design should provide for easy and cost-effective repair or replacement of the roof.

E. Any roof penetrations must be designed and constructed in collaboration with the roofing professional or manufacturer responsible for the roof and roofing material warranty for the specific site, to ensure that the roof warranty is not invalidated by the installation of the PV system.

F. Provide a 6’ safety zone from the roof edge to the PV system. A 3’ clear path of travel must be maintained to and around all rooftop equipment.

PART 3 - EXECUTION

3.01 MANUFACTURERS WARRANTY

A. The manufacturer shall guarantee the systems to be free from material defects and workmanship for a period of 1 years from installation. The solar panels shall have the following power output warranty:

1. 1st 10 years at 90% minimum output

2. Remaining 15 years at 80% minimum output

B. DC/AC power inverters shall have a minimum 10-year warranty.

3.02 INSTALLATION

A. All Balance of Systems (wiring, component, wiring, conduits, and connections) must be suited for conditions for which they are to be installed. It is preferred that inverters are located inside out of the weather in a minimum NEMA 12 enclosure. If inverters are in exterior locations, they shall be installed in all-weather NEMA 4X enclosures. An interval data meter must be installed to measure the AC output of the inverter. This meter should be located in a location accessible to facilities personnel.

B. Interconnection must comply with Tacoma Power, Interconnection Standards for non-Utility Generation". Contractor will assist the Owner in preparing and submitting appropriate interconnection agreements with the utility. This shall be done at no cost or liability to the Owner.

3.03 ELECTRICAL CONNECTIONS TO BUILDING ELECTRICAL DISTRIBUTION SYSTEM

A. This Contractor is responsible for all labor, materials & installation up to the building electrical distribution system connection point. The building electrical contractor will provide the final connections to the electrical distribution system.

3.04 OPERATION & MAINTENANCE

A. As part of the acceptance of the solar PV system the Contractor shall instruct and provide operations manuals on how to shut down the solar PV system in the event of an emergency. The Contractor shall insure that campus staff and fire department can easily identify what to do in the event of an emergency and able to perform these tasks quickly and safely.

B. The Contractor shall provide technical assistance and hands on training to the Owner for operation of the monitoring system.

END OF SECTION

SECTION 26 4300

TRANSIENT VOLTAGE SURGE SUPPRESSION / SURGE PROTECTIVE DEVICE

PART 1 - GENERAL

1.01 DESCRIPTION

A. This Section describes the materials and installation requirements for transient voltage surge suppressors (TVSS), alternatively called Surge Protective Devices (SPD). TVSS/SPD devices are used for the protection of all AC electrical circuits from the effects of lightning induced currents, substation switching transients and internally generated transients resulting from inductive and/or capacitive load switching.

B. This specification also describes the mechanical and the electrical requirements for the TVSS devices. The TVSS shall be suitable for application in both category A, B and C environments as described in ANSI/IEEE C62.41- 2002.

C. The TVSS shall be of parallel design and provide individual protection components connected Line to Ground and Line to Line for Delta and High Resistance Grounded systems and Line to Ground, Line to Neutral and Neutral to Ground for Wye and Single-Phase distribution systems.

D. Systems not providing discreet protection components in the above configuration will be rejected. A schematic diagram showing the configuration and technology of all internal connected components must be provided with submittals.

E. The TVSS devices will be used both near electrical service entrance locations and at locations distant from service entrance locations (Panels, MCC's, Equipment Disconnects, etc.). For the purposes of this specification, it should not be assumed that on Wye systems a neutral to ground bond will not be located electrically close to the suppressor location, thus discreet Neutral to Ground Suppression and Filter components are required.

F. The Manufacturer/Vendor shall furnish all of the necessary TVSS/SPD products and related hardware (i.e., flush mounting kits, mounting brackets, etc.) as required for the installation of the Transient Voltage Surge Suppression (TVSS) / Surge Protective Devices (SPD) System suitable for the application.

1.02 RELATED WORK SPECIFIED ELSEWHERE

A. Section 26 0000 – Electrical General Conditions

B. Section 26 0519 - Wire and Cable

C. Section 26 0526 - Grounding

D. Section 26 0532 – Outlet and Pull Boxes

E. Section 26 0533 – Raceways

F. Section 26 2413 - Switchboards

G. Section 26 2416 – Panelboards

1.03 SUBMITTALS

A. The vendor/manufacturer shall submit 3 copies of all related TVSS Specifications, product data, electrical and mechanical shop drawings, installation requirements/instructions, maintenance manuals (if applicable) and performance/warranty information requested in this document for the actual proposed TVSS/SPD device(s) to Project Engineer. All information shall be submitted in a three-ring binder indexed by response and test. Project Engineer reserves the right to select or reject any vendor response or product.

B. In order for TVSS device to be considered for this project, all responses to information requested in this specification must be provided in writing and must reference each specification section and sub-section. Written submittal responses shall be signed by manufacturer's VP of Engineering. Attach information as necessary to provide compliance with specification response requirements. If a manufacturer cannot fully comply with a section of the specification, this must be stated in the response and the reason for non-compliance shall be provided.

1.04 QUALITY ASSURANCE AND PERFORMANCE

A. Each complete suppression unit shall be UL1449 3rd Edition Listed as a Transient Voltage Surge Suppressor. UL 1449 test data for TVSS devices proposed, including UL let through voltage classification shall be provided with submittal. Units shall bear suppressed voltage rating issued by UL.

B. Engineer reserves the right to have an employee or a representative designated by firm witness any testing required by this document. Vendor/manufacturer shall provide written notice of intent to test and shall coordinate testing with Engineer, should Engineer desire to witness tests.

C. Performance & Durability Testing: Units shall be tested by an independent test agency in accordance with test procedures outlined in ANSI/IEEE C62.45, NEMA LS1 & UL1449. The following test data shall be provided:

1. Provide Maximum Surge Current (Single Pulse Rated, 8/20µS, by mode, Amperes) as per NEMA LS1-1992 – 2.2.9 with submittals document. Maximum surge current rating shall not be less than 120kA (60kA per mode including N-G) for branch panel models in low exposure areas, high exposure areas and for IEEE C62.41.1-2002 - Category B Switchboard and Motor Control Center Locations. Maximum surge current rating (per phase in applicable modes other than Neutral to Ground) shall not be less than 240kA (120kA per mode including N-G) for IEEE C62.41.1-2002 - Category C Locations, including all Electrical Equipment located at Service Entrance location. Provide proof of completion of such tests and test data with submittal data. Provide surge current ratings for each applicable protection mode (L-L, L-N, L-G & N-G) with submittals.

2. Provide durability test data utilizing the ANSI/IEEE C62.41-1991, Category C3, 20kV/10kA, 1.2 x 50 S - 8x20S combination waveform. Provide test data with submittals. Let through voltages shall be provided for all applicable protection modes (L-N, L-G & N-G) from zero reference. All TVSS/SPD devices (including branch panel) shall withstand a minimum of 5,000 hits delivered at a rate of one pulse per minute. Unit shall not fail or suffer let through voltage degradation of more than 7%. Lead length for testing and let through measurements shall be 6”. Provide lead length used for testing with submittals.

3. Provide performance test data utilizing the ANSI/IEEEC62.41.2-2002, Exposure - High, 10kV/10kA, 1.2 x 50µS - 8x20µS combination waveform. Provide test data with submittals. Let through voltages shall be provided for all applicable protection modes (L-N, L-L & L-G) from zero reference. Lead length for testing and let through measurements shall be 6”. Provide lead length used for testing with submittals.

4. Provide let through voltage test data and test waveforms used for (N-G) with the submittals for units intended for grounded Wye systems.

5. Provide let through voltage test data for the ANSI/IEEE C62.41.2-2002, Category B, 0.5µS-100 kHz 6kV/.5kA ring wave (L-L, L-N & L-G) with the submittals. Let through voltages shall be provided for all applicable protection modes and shall be measured from the zero reference.

6. Provide let through voltage test data for the ANSI/IEEE C62.41.2-2002, Neutral grounded at service entrance – Far Category, 0.5µS-100 kHz 3kV ring wave (N-G) with the submittals for units intended for grounded systems.

7. If available, test data shall be provided for the ANSI/IEEEC62.41.2-2002 level three category of the 5/50 nS EFT Burst waveform as a part of this submittal package. Let through voltages shall be provided for all applicable protection modes (L-L, L-N, L-G & N-G).

8. All TVSS/SPD tests must provide let through voltages using a positive polarity pulse at the 90-degree phase angle location on the sine wave for Category B and C waveforms and 180-degree for Category A waveforms. Let through voltages must be measured from the zero-voltage reference line for the tests.

9. All let through voltage test results must be provided with a minimum of six inches of lead length as measured from the point where the wire would normally exit the TVSS enclosure (standard installation) to the point of termination. Wire used for test must be of the type of building wiring material recognized by the latest adopted version of the NEC and must be readily available for wiring commercial buildings, unless permanently attached to and supplied with suppressor. Conductors sizing used for test shall be based on manufacturer's installation instructions for the proposed product.

10. The above test results, including oscillographs, test conditions, identity of the testing lab and the test technicians and engineers shall be provided as part of the submittal package. The manufacturer shall provide the contact phone number for a readily available factory engineer responsible for answering questions about this product and the tests performed. Information shall be provided in a format that is easily to analyze and review.

11. Maximum Let Through Voltages based on above requirements:

Peak Voltage Let Through Table

Peak Let Through Voltages (measured from zero reference per NEMA LS-1) shall not exceed:

Voltage & Configuration	Test / Wave	L-L	L-N	L-G	N-G	Phase Angle
480/277 Wye - Grounded	C3 – 20 kV/10ka	2500	1600	1900	1700	90
480/277 Wye - Grounded	B3 – 6 kV/3kA	1700	1000	1100	1000	90
480/277 Wye - Grounded	A1 – 2kV – 67A	150	150	150	150	180
480/277 Wye - Grounded	UL1449 Rev2 Update	1500	800	800	800	----
480 Delta	C3 – 20 kV/10ka	2400	N/A	2400	N/A	90
480 Delta	B3 – 6 kV/3kA	2000	N/A	1900	N/A	90
480 Delta	A1 – 2kV – 67A	75	N/A	1200	N/A	180
120/208 Wye	C3 – 20 kV/10ka	1400	1100	1300	1150	90
120/208 Wye	B3 – 6 kV/3kA	950	550	600	550	90
120/208 Wye	A1 – 2kV – 67A	100	75	120	100	180
120/208 Wye	UL1449 Rev2 Update	800	400	400	400	-----

Peak Voltage Let Through Table Peak Let Through Voltages (measured from zero reference per NEMA LS-1) shall not exceed:						
Voltage & Configuration	**Test / Wave**	**L-L**	**L-N**	**L-G**	**N-G**	**Phase Angle**
120/240 Split Phase	C3 – 20 kV/10ka	1400	1100	1250	1200	90
120/240 Split Phase	B3 – 6 kV/3kA	1000	600	600	600	90
120/240 Split Phase	A1 – 2kV – 67A	100	75	120	95	180

D. Manufacturers Qualifications: Only firms regularly engaged in the manufacture of TVSS products for category C locations (ANSI/IEEE C62.41.1-2002), and whose products have been providing satisfactory service for not less than five years, shall be considered. A customer reference list, with a minimum of five contact names and current phone numbers shall be provided with the submittals. All manufacturer qualifications shall be provided as part of the submittal.

E. The successful manufacturer/vendor shall assign a technical contact person for TVSS application, installation and warranty questions. This contact shall be available to provide a response to a technical question within a maximum of two business days.

F. The Engineer reserves the right to accept or reject any or all submittals, to request additional information as deemed necessary or to request submittals for a different unit that may be deemed more appropriate for this installation.

G. Engineer reserves the right to have an employee or a representative designated by firm witness any testing required by this document. Vendor/manufacturer shall provide written notice of intent to test and shall coordinate testing with Engineer, should Engineer desire to witness tests.

1.05 CODES AND STANDARDS

A. UL compliance and labeling: Listed per UL 1449, Third Edition.

B. TVSS and Enclosures proposed and submitted shall be safety agency listed for all intended installations, meeting or exceeding all of the following: NEMA 1, 3R, 4, 12 & 13.

C. TVSS device shall be designed to allow installation in accordance with latest adopted version of the National Electrical Code (NEC), National Electrical Safety Codes (NESC) and applicable OSHA 1910 requirements.

D. NEMA LS1 (latest revision)

E. IEEE Standard C62.41.1, IEEE Standard C62.41.2 & IEEE Standard C62.45 (latest revisions)

PART 2 - PRODUCTS

2.01 GENERAL REQUIREMENTS

A. The TVSS shall be compatible with the electrical system voltage, current, system configuration and intended applications.

B. The TVSS maximum continuous operation voltage (MCOV) shall be capable of sustaining 115% of the nominal RMS voltage (with the associated peak voltage of 1.414*RMS) continuously without degradation and heating.

C. The TVSS shall only use clamping components connected in parallel with the supply to limit the surge voltages.

D. Arc Discharge components, such as Gas Tube Arresters shall not be used as the sole protection component in any protection mode. Gas Tube Arresters may be used in conjunction with other components, such as MOV's and SAD's to provide protection. Where Gas Tube Arresters are installed, the circuit shall be specifically designed to prevent power follow current.

E. Internal Fusing – If provided, shall be component level style:

1. Component Level Fusing:

a. Each Metal Oxide Varistor, or other primary suppression component, shall be individually fused for safety and performance to allow the SPD to withstand the full rated single pulse peak surge capacity per mode without the operation or failure of the fuses. Overcurrent fusing that limits the listed peak surge current of the SPD is not acceptable. Replaceable cartridge type per phase or per mode overcurrent fusing is not acceptable.

b. For arc quenching capability, minimization of smoke and contaminates in the event of a failure, and to ensure the safest possible design, all surge components, current carrying paths and fusing shall be packed in fuse grade silica sand.

c. Fusing shall be present in every mode, including Neutral-to-Ground.

d. The fusing shall be capable of interrupting up to a 200kA symmetrical fault current with 600VAC applied, providing a listed 200kAIC Short Circuit Current Rating (SCCR) without additional over-current protection.

F. Status Indication & Monitoring: The suppressor shall include individual Phase Status LEDs, a red Service Required LED, an integrated Audible Alarm with silence button and Form C dry contacts (N.O. or N.C.) for remote monitoring capability. The form C contacts must be rated a minimum of 65VDC/150VAC with a load of 30WDC/60VA AC, and must be isolated and insulated from the ground plane and the power system to prevent Surges from reaching the monitoring system. The system shall provide insulation and isolation against any impressed voltages. Contacts shall be designed to change state upon device failure or loss of power.

G. The protection should be housed in the appropriate NEMA rated, heavy duty powder coated steel enclosure. This enclosure must provide complete protection against personnel hazards and damage to equipment should a failure of the TVSS protection device occur. This enclosure shall also be designed to allow connection of the TVSS device without sharp bends in the conductors and lead lengths of less than 18" from the TVSS Lugs (or enclosure opening for devices with leads attached) to the final point of attachment to the power system for the application (assuming connection point is 12" from the exterior of the enclosure).

H. Manufacturer shall provide a comprehensive warranty that provides for unlimited full replacement of a suppressor that is damaged or that fails to meet manufacturers published specifications and specifications provided within, without pro-rating value. Warranty shall provide coverage for a minimum period of 20 years for individual units (standard warranty) and. Series SPDs shall be covered for 10 years. These Unlimited Replacement Warranties cannot exclude system overvoltages or direct lightning strike events. Warranty shall not require any factory or third-party testing. Warranty shall apply to installed unit(s) for the duration of the warranty period no matter who owns the facility or equipment. All warranty information and copies of warranty documents must be provided with this response.

1. All replacements shall be of same make, model and configuration as original unit unless otherwise requested or approved by customer.

2. The manufacturer/vendor shall provide a warranty replacement unit at the facility within 5 days of receipt of written notification that the TVSS unit has failed, at no cost to the customer.

3. If the manufacturer/vendor requires inspection of the installed unit to validate warranty claim, the manufacturer/vendor must visit the site where the failed TVSS device(s) are located within 3 days of notification. This visit will be performed at no cost to customer. This section does not modify the requirement for the TVSS replacement to be within 5 days of written notification as described in section G, above.

4. The replacement unit shall be sent to the facility without shipping, handling, examination or other fees.

I. Complete, comprehensive installation instructions shall be provided for the TVSS systems proposed. Installation instructions must provide for compliance with latest adopted NEC requirements and UL listing requirements, while not degrading performance of TVSS device as tested. Provide copies of installation instructions for the models proposed with the specification response. Successful vendors/manufacturer shall provide a complete, comprehensive installation checklist.

J. If manufacturer claims TVSS device to have filtering capabilities, provide complete information on filtering performance of TVSS device with specification response. This information must include attenuation across a stated frequency range. If the TVSS is a UL 1283 listed device, the manufacturer shall provide all performance specifications for filter attenuation.

K. Provide complete enclosure dimensions (H*W*D) and cutsheets indicating dimensions including locations of terminations and wire entry locations with specification response.

L. Provide UL Short Circuit Current Ratings (SCCR). Minimum ratings shall be 200kAIC without additional/external over-current protection.

M. Manufacturer shall make available metal flush plates for distribution and branch panel SPDs. The flush plate shall provide for a clean architectural finish and be utilized where the attached panel is mounted flush.

N. Manufacturer must have knowledgeable local representation and distribution within 100 miles of the project location and must be willing to provide technical support, warranty claim support, and installation support for the project.

O. Successful manufacturer/vendor must be capable of supplying TVSS for project within 20 days of receipt of order for orders of 25 units and less for models submitted in response to this specification.

2.02 SERVICE ENTRANCE

A. Transient Voltage Surge Suppressors shall be installed at all service entrances of each building and as shown on the riser / one-line diagram. Suppressors shall be listed in accordance with UL 1449 3rd Edition, Standard for Safety, Transient Voltage Surge Suppressors.

B. For 3-phase, 4-wire plus ground configurations, suppressors shall provide suppression and filter elements between each phase conductor and the system neutral, each phase conductor and the system ground and between the neutral conductor and ground.

C. Suppressors shall include a passive circuit that allows the suppressor to actively follow the voltage waveform and provide a clamping envelope that follows the sine wave to limit low level IEEE C62.41 A1 ring waves (of either polarity) at all locations on the sine wave. This circuit shall also perform in the Neutral to Ground Mode where a sine wave does not exist. Details of circuit used to provide this function and information detailing and quantifying the performance of this circuit (in all modes with Category A1 ring wave) shall be provided with specification response. All Let Through Voltage (LTV) values shall not exceed those stated in section 1.04.C.11.

D. Indication of proper suppressor connection and operation shall be provided, consisting of status LEDs for each phase, a Red Service Required LED and an internal Audible Alarm with silence/mute button. Dry contacts (NO/NC) are required for external monitoring.

E. SPD shall exhibit fully redundant protection for each phase.

F. The surge suppressor shall be of parallel design and shall be capable of being removed and replaced without disrupting electrical service to the facility.

G. Suppressors shall consist of solid-state components and shall operate bi-directionally.

H. All surge protective devices shall be of the same manufacturer.

I. The minimum single impulse current rating (as per NEMA LS-1) shall not be less than 240,000 amperes per phase (120KA per mode). Provide proof of compliance by supplying certified test results from independent test lab with submittals.

J. Maximum size of TVSS/SPD units for Primary, Service Entrance applications is 15.5”x12.3”x8.25”.

2.03 SECONDARY SUPPRESSORS FOR MCC, DISTRIBUTION & BRANCH PANELS

A. Transient Voltage Surge Suppressors shall be installed at all service entrances of each building and as shown on the riser / one-line diagram. Suppressors shall be listed in accordance with UL 1449 3rd Edition, Standard for Safety, Transient Voltage Surge Suppressors.

B. For 3-phase, 4-wire plus ground configurations, suppressors shall provide suppression and filter elements between each phase conductor and the system neutral, each phase conductor and the system ground and between the neutral conductor and ground.

C. Suppressors shall include a passive circuit that allows the suppressor to actively follow the voltage waveform and provide a clamping envelope that follows the sine wave to limit low level IEEE C62.41 A1 ring waves (of either polarity) at all locations on the sine wave. This circuit shall also perform in the Neutral to Ground Mode where a sine wave does not exist. Details of circuit used to provide this function and information detailing and quantifying the performance of this circuit (in all modes with Category A1 ring wave) shall be provided with specification response. All Let Through Voltage (LTV) values shall not exceed those stated in section 1.04.C.11.

D. Indication of proper suppressor connection and operation shall be provided, consisting of status LEDs for each phase, a Red Service Required LED and an internal Audible Alarm with silence/mute button. Dry contacts (NO/NC) are required for external monitoring.

E. SPD shall exhibit fully redundant protection for each phase.

F. The surge suppressor shall be of parallel design and shall be capable of being removed and replaced without disrupting electrical service to the facility.

G. Suppressors shall consist of solid-state components and shall operate bi-directionally.

H. All surge protective devices shall be of the same manufacturer.

I. The minimum single impulse current rating (as per NEMA LS-1) shall not be less than 120,000 amperes per phase (60KA per mode). Provide proof of compliance by supplying certified test results from independent test lab with submittals.

J. Maximum size of TVSS/SPD units for Secondary Suppressors for MCC, Distribution & Branch Panel applications is 15.5”x12.3”x8.25”.

2.04 PRIOR APPROVALS

A. The following manufacturer(s) have submitted the required information and have been reviewed and approved for this project:

Total Protection Solutions SPD/TVSS by Thomas & Betts Power Solutions						
Voltage / Location	**480Y277v 3 Phase Bonded Wye**	**480v 3 Phase Delta**	**208Y120v 3 Phase Bonded Wye**	**208v 3 Phase Delta**	**120/240v Single / Split Phase**	**120v Fire Alarm, Security, PLC, etc.**
Main Services	**ST240-3Y480-FL**	ST240-480NN-FL	**ST240-3Y208-FL**	ST240-240NN-FL	ST240-1S240-FL	N/A
Distribution MCC & Branch Panels	**LP120-3Y480-FL**	ST120-480NN-FL	**LP120-3Y208-FL**	ST120-240NN-FL	LP120-1S240-FL	N/A
Dedicated Equipment	N/A	N/A	N/A	N/A	N/A	**LTE120-30A**

TVSS/SPD Applications Notes:

1. Use 60 Amp Circuit Breakers for Service Entrances and 30 Amp Circuit Breakers for Distribution, MCC & Branch Panel applications.
2. Use Delta units for unbonded/ungrounded and high resistance ground Wye applications.

Innovative Technology Protector by Eaton/Cutler Hammer						
Voltage / Location	**480Y277v 3 Phase Bonded Wye**	**480v 3 Phase Delta**	**208Y120v 3 Phase Bonded Wye**	**208v 3 Phase Delta**	**120/240v Single / Split Phase**	**120v Fire alarm Security, PLC, etc.**
Main Services	**PTE240-3Y201-L-SD**	PTE240-NN400-L-SD	**PTE240-3Y101-L-SD**	PTE240-NN201-L-SD	PTE240-1S101-L-SD	N/A
Distribution MCC & Branch Panels	**PTE120-3Y201-L-SD**	PTE120-NN400-L-SD	**PTE120-3Y101-L-SD**	PTE120-NN201-L-SD	PTE120-1S101-L-SD	N/A
Dedicated Equipment	N/A	N/A	N/A	N/A	N/A	**LTE120-30A**

PART 3 - EXECUTION

3.01 GENERAL

A. Suppressors shall be installed per the manufacturer's installation instructions and the requirements of: the NEC, the local authority having jurisdiction and the project engineer.

B. Size overcurrent protective device and conductors per manufacturer's recommendations and NEC requirements.

C. Project Engineer or their appointed representative may perform inspection of the installed suppressors and reserves the right to require corrections to the installation to comply with manufacturer’s installation requirements and project specifications.

D. The SPD/TVSS supplier must provide on-site installation training for the electrical contractor.

3.02 SERVICE ENTRANCE

A. Install one primary suppressor at each utility service entrance to the facility as indicated on the drawings.

B. Suppressor shall be installed on the load side of the service entrance disconnecting means in accordance with NEC requirements.

C. Provide a 60 Amp circuit breaker (with a safety clip to ensure the circuit breaker cannot be inadvertently turned off) in the switchboard as over-current protection for the wire and as a disconnecting means for the SPD (or as specified by the manufacture).

D. Use minimum #6 AWG wire for connecting the SPD.

E. Conductors between suppressor and point of attachment shall be kept as short and straight as possible. Lead length of connecting conductor shall not exceed two (2) feet without written permission of the specifying Engineer. If length is exceeded, Contractor may be required to relocate SPD at no cost to the Owner.

F. Over-length SPD leads (greater than 24”) must be twisted together (1 twist/foot) and securely tie-wrapped once per foot to reduce impedance of the leads.

G. SPD leads may not be spliced.

H. Suppressor's ground shall be bonded to enclosure frame and the service entrance ground bus, and conduit between the TVSS/SPD and the switchboard must provide secure electrical/mechanical connections.

3.03 SECONDARY SUPPRESSORS FOR MCC, DISTRIBUTION & BRANCH PANELS

A. Install one secondary suppressor at each MCC, Distribution Panel, Branch Panel & Sub-Panel location as indicated on the drawings.

B. Provide a 30 Amp circuit breaker (with a safety clip to ensure the circuit breaker cannot be inadvertently turned off) in the panel being protected as over-current protection for the wire and as a disconnecting means for the SPD (or as specified by the manufacture).

C. Conductors between suppressor and point of attachment to the panelboard shall be kept as short and straight as possible. Mount the TVSS directly adjacent to the circuit breaker closest to the neutral bus, such that the maximum length of connecting wiring is kept as short as possible, not exceed 18 inches for all phase and neutral leads (24” for ground lead on IG panels). If length is exceeded, Contractor may be required to relocate SPD at no cost to the Owner.

D. Over-length SPD leads (greater than 18”) must be twisted together (2 twists/foot) and securely tie-wrapped once per foot to reduce impedance of the leads. Quality compression butt-splice connections are required when extending SPD leads (wire nuts are not acceptable).

E. Grounding for all non-IG installations: Suppressor's ground lead shall be bonded to the panel enclosure with a small ground lug as close as possible to the TVSS mounting point. Conduit between the TVSS/SPD and the switchboard must provide secure electrical/mechanical connections.

F. Multiple “Feed-Through” Panels with shared SPD/TVSS units must be immediately adjacent to each other (side by side) with short tie cables not to exceed 36”. Sub-panels must be feed from a primary panel with a “lug-out’, lug-in” tie connection, and the tie connection lugs must be at the same end of the primary and sub-fed panel. i.e., bottom to bottom or top to top to ensure short tie “sub-feed” cables.

1. Dual Panel Configurations: One SPD/TVSS per two panels

2. Three and Four Panel Configurations: One SPD/TVSS installed on both outside panels of the multi-panel configuration, i.e., Install SPD on first (primary) and another one on the third or fourth sub-fed panel for a total of two SPDs.

END OF SECTION

SECTION 26 5000

LIGHTING

PART 1 - GENERAL

1.01 WORK INCLUDED

A. Provide the lighting system complete and operational.

B. Recessed fixtures installed in fire-resistive ceiling construction shall have the same fire rating as the ceiling or shall be provided with fireproofing boxes having materials of the same fire rating as the ceiling.

1.02 RELATED DOCUMENTS

A. Section 26 0000 – Electrical General Conditions

1.03 FIXTURE SCHEDULE MANUFACTURER'S SERIES NUMBERS

A. The design series reference does not necessarily represent the number, size, wattage, lumen output or special requirements as specified hereinafter.

1.04 SUBMITTALS

A. Shall be neatly and clearly marked to indicate the fixtures, performance, efficiency, mounting methods comply with contract documents.

B. When substitute fixtures are submitted (if permitted) the data shall clearly cross reference (written or highlighted) that the substitute fixture complies with every detail of the specified fixture. The substitute fixture must be supplied with an IES file for verification of the fixture performance and lumen output.

C. The manufacturer’s representative will be required to provide the photometric reports for various areas with the substituted fixture to prove the foot-candle level is adequate and meets the design intent.

D. The Engineer has the right to request a working sample of the substituted light fixture to verify quality and style meet the design intent.

E. Fixtures not fully complying with the intent of the contract documents and design criteria will be rejected.

PART 2 - PRODUCTS

2.01 DLC COMPLIANCE

A. Light fixtures are required to be DLC 4.0 Compliance and be on a DLC Compliance listing to accommodate energy rebate.

2.02 METAL PARTS

A. Interior Fixtures: Steel or aluminum with manufacturer's standard color and finish as indicated on the Lighting Fixture Schedule, unless specified otherwise.

B. Exterior Fixtures: Corrosion resisting metal, a (non-ferrous, stainless steel or special finish) and in all cases suitable for outdoor service without tarnishing or other damage due to exposure; manufacturer's standard colors unless specified otherwise; cadmium plate all metal parts concealed by canopies, including screws, plates and brackets. All exposed fasteners shall be tamperproof.

2.03 LIGHT TRANSMITTING COMPONENTS

A. When not otherwise independently secured by other means the lens of any fixture shall be contained in a captive metal frame that remains attached to the fixture when door is in open position.

2.04 SPECIAL PARTS

A. Adapters, Plates, Brackets and Anchors: Provide where required by construction features of the building to suitably mount lighting fixture. All such appurtenances and mounting methods shall be approved by the Architect/Engineer prior to fabrication and installation.

B. Low Voltage Transformers: Provide and install where required to power individual or linear runs of low voltage light fixtures.

2.05 LAMPS

A. Solid-State Lighting: Fixtures shall have a lumen maintenance life expectancy (L_{70}) of > 50,000 hours, a CRI of > 80, and a CCT of 3500K or as shown on the panel schedule. Each solid-state fixture model shall be tested in accordance with IES LM-79 & LM-80 requirements.

2.06 LED DRIVERS/POWER SUPPLIES

A. The LED drivers/power supplies shall meet the following criteria:

1. Drive mode: Constant Current or Constant Voltage depending on the LED configuration for the light fixture.

2. Output currents: 250 mA – 1000 mA

3. Output voltages: 6VDC – 48VDC

4. Input voltages: 110 to 277 VAC; 50/60 Hz.

5. Power factor at >0.90 @ full load

6. Line regulation accuracy: +/- 2%

7. Load regulation accuracy: +/- 3%

8. Greater than 85% efficient

9. Output over-voltage, output over-current and output short circuit protection with auto recovery

10. Provide each driver with onboard transient voltage suppression (TVS)

11. Limited power source output to allow for class 2 wiring.

12. Flicker Free 0-10V Dimmable to 10% light output.

13. 5 Year Warranty.

2.07 GENERATOR TRANSFER DEVICE

A. Transfer device shall be installed integral to each light fixture and shall automatically transfer power from the normal power source to the emergency circuit upon loss of normal power. Bodine #GTD

B. Where the transfer device cannot be mounted in the light fixture and the transfer device is indicated to control more than (1) light fixture on the same switch leg, provide Bodine #GTD20A.

C. The device shall be capable of bypassing the local switching means when normal utility power has been lost. The device shall consist of a test switch, a normal power indicator light and an alternate power indicator light. The unit shall be contained within its own enclosure, suitable for mounting on the wall and above accessible ceilings. The device shall be able to accommodate up to 20 amps of lighting load.

2.08 EMERGENCY BATTERY BACK-UP IN FIXTURES

A. Emergency lighting shall be provided by using a LED fixture equipped with a Bodine BSL17C emergency driver. This emergency driver shall consist of a high-temperature, maintenance-free nickel-cadmium battery, charger and electronic circuitry contained in one 12” x 2 3/8” x 1 1/2” metal case.

B. Provide with an illuminated test switch (ITS) to monitor charger and battery and installation hardware.

C. The unit shall be suitable for indoor and damp locations and for sealed & gasketed fixtures, including fixtures rated for wet locations.

D. The emergency driver shall be capable of delivering up to 7.5 Watts to an LED load (30-130VDC) for a minimum of 90 minutes. The unit shall have a 15.0 Watt-hour battery capacity and shall comply with emergency standards set forth by the current NEC.

E. The emergency driver shall be UL Listed for field or factory installation.

F. Provide with 5-year manufacturer warranty.

2.09 HANGING FOR PENDANT FIXTURES

A. Rigid type, with not less than 5 thread engagement at each end, consisting of iron pipe, with brass or aluminum tubing casing, or painted tubing not less than 0.040 inches thick.

B. Aircraft cable, stainless steel, sized appropriately by manufacturer for weight and seismic zone.

C. Provide a canopy for each fixture hanger except where fixture conceals the outlet box directly without a canopy.

D. Provide a safety chain for all glass pendant fixtures and for all fixtures mounted in gymnasiums.

E. Provide Unistrut and mounting hardware above the ceiling to bridge structure, piping, and ductwork in order to mount the fixture centered in the space per the drawings.

2.10 OUTDOOR LIGHTING STANDARDS

A. Provide watertight insulating fuse in the base of lighting standards to individually protect each lighting fixture; buss Style "HEB" or approved, waterproof fuse holder with Buss fuse of appropriate capacity and voltage. Provide fuse for each hot circuit wire; do not fuse neutral.

B. Provide concrete preformed round poles with base plate for bolting to concrete foundation. Natural exposed aggregate finish. Height as noted on drawings.

C. Provide concrete foundations as shown on drawings. Field verify locations with Architect prior to installation of bases.

2.11 OUTDOOR GROUND MOUNTED LIGHTING FIXTURES

A. Provide concrete foundations for mounting of ground mounted lighting fixtures. Foundation shall be a minimum of 6” deeper than the light fixture and a minimum of 6” all around the base of the fixture. Provide #4 rebar with 3” minimum ring ties at 8” on center. The #4 rebar shall be vertically spaced approximately 6” apart. Field verify locations with Architect prior to installation of bases.

2.12 EXIT SIGNS

A. The signs shall be thermoplastic impact-resistant or as indicated on the panel schedule, scratch resist and corrosion proof. Faceplate and back cover shall be interchangeable on the housing.

B. Battery shall have a low-voltage disconnect to prevent excessively deep discharge.

C. LED – less than one watt of power consumption. The fixture shall operate in normal (AC mode) and emergency (DC input) modes.

2.13 INTEGRAL PHOTOCELLS

A. Where daylight harvesting photocells are mounted integral to light fixtures, the manufacturer shall provide a diode (or similar means) on the low voltage dimming control bus to ensure that the photocell dimming signal does not propagate to other light fixtures. If the manufacturer does not provide a means to keep the photocell dimming signal from propagating outside of the fixture, it is the responsibility of the Electrical Contractor to install the required diodes in a junction box outside of the fixture at no additional cost to the owner.

PART 3 - EXECUTION

3.01 LIGHTING FIXTURES - GENERAL

A. Size and mounting height from finished floor to bottom of fixture as indicated on the drawings. Verify mounting provisions prior to the ordering of fixtures. Fixtures shall be UL listed for the location, and application in which they are installed.

B. Ceiling fixtures shall be coordinated with and suitable for installation in, on or from the ceiling as shown. Installation and support of fixtures shall be in accordance with NFPA 70 and manufacturer's recommendations.

C. Recessed fixtures installed in seismic areas shall be installed utilizing specially designed seismic clips.

D. Suspended fixtures installed in seismic areas shall have 45° swivel hangers and shall be located with no obstructions within the 45° range in all directions. The stem, canopy and fixture shall be capable of 45° swing.

3.02 DIFFUSERS AND ENCLOSURES

A. Install lighting fixture diffusers only after construction work, painting and clean up are completed. Prior to final acceptance, remove all lamps, reflectors and diffusers, wash, rinse and reinstall.

3.03 ADJUSTMENT OF FIXTURES

A. Make all final spotlight and adjustable light settings under the direction of the Architect/Engineer during a scheduled period of time prior to the completion of the project. Include costs for all equipment and personnel expenses required for adjustment.

B. For fixtures with indirect lighting, notify Engineer prior to installation of any circumstance where the fixture lamp source will be within 12" of ceiling.

3.04 SUPPORT OF FIXTURES

A. Recessed Troffer Type: For fixtures supported by the ceiling suspension system, provide integral tabs, which rotate into position after fixture is lifted into the ceiling cavity. Provide two safety chains secured to structural members above suspended ceiling. Circuit connection shall be through use of 60-inch flexible conduit from a rigidly supported junction box. For plaster or GWB ceilings, provide a plaster frame compatible with light fixture.

B. Recessed Downlight Type: Mount in frames suitable for the ceiling, with the recessed portion of the fixture securely supported from the ceiling framing. For fixtures supported by a ceiling suspension system, provide two safety chains secured to structural members above suspended ceiling.

C. Surface and Pendant Mounted Type:

1. Where mounted on accessible ceilings, hang from structural members by means of hanger rods through ceiling or as approved.

2. Where ceiling is of insufficient strength to support weight of lighting fixture, provide additional framing to support as required. Fixtures shall be supported from structure with seismic bracing independent of ceiling.

3. For Pendant Mount Type: Provide a unistrut channel for mounting fixtures entire fixture length unless light fixture is designed specifically for supporting itself. Provide 3/8-inch thread rod secured to structural members for support of unistrut channel.

4. Continuous Runs of Fixtures: Straight when sighting from end to end, regardless of irregularities in the ceiling. Where fixtures are so installed, omit ornamental ends between sections.

5. Provide Unistrut and mounting hardware above the ceiling to bridge structure, piping and mechanical ductwork in order to mount the fixture per the Contract Documents.

D. Drivers/Power Supplies shall be accessible.

3.05 LOCATION

A. Mount to the dimensions shown on the drawings. Mount at quarter points where no dimensions appear. Architect shall specify mounting locations where no dimensions appear and quarter point mounting is impractical or not indicated on the drawings.

B. Refer to details, structural drawings, mechanical drawings, and coordinate with mechanical Contractor for equipment and ductwork mounted in ceilings to prevent conflict with light fixtures prior to installation. If conflicts cannot be resolved with the Mechanical Contractor, notify Architect/Engineer.

3.06 SPARE FIXTURES

A. Self-Luminous Exit Sign: Provide (2) two Self-Luminous Exit Signs Lithonia # DSW1X Green or Red to match EX1. Install at locations as directed by Architect.

3.07 CONCRETE FOUNDATIONS

A. Install at locations shown taking care to provide soil compaction same as required under paving to avoid settling and tilting of pole. Provide for all steel, concrete or aluminum poles shown. Concrete foundations shall have a minimum raceway sweeps of 90 degrees and anchor bolts shall be accurately set in foundations using a template supplied by the pole manufacturer. Concrete work and grouting; see Division 3 of the specifications. When concrete work has cured, base plates shall be leveled and grouted in place. Pole anchor bases shall then be set on base plates, leveled plumb on foundations, and secured with holding nuts.

3.08 FIXTURE TENTING

A. Contractor shall coordinate ceiling types with architectural drawings and specifications and provide equivalent fire rated enclosures above all light fixtures which penetrate rated ceilings.

B. Light fixtures that are not IC rated and are to be installed within 3” of insulation shall be provided with an EZ Barrier #EZB 16-24-9 protective cover designed for recessed light fixtures.

END OF SECTION

SECTION 28 1600

INTRUSION ALARM SYSTEM

PART 1 - GENERAL

1.01 RELATED DOCUMENTS

A. Drawings and general provisions of the Contract, including General Conditions, Supplementary Conditions and Divisions 0 and 1 Specification Sections, apply to work of this Section.

1.02 SCOPE AND RELATED DOCUMENTS

A. Provide new addressable Intrusion Alarm System including, but not limited to; motion sensors, door position switches, duress buttons, monitoring points, keypads, power supplies at all locations as shown on the plans and/or as indicated in these specifications. The keypad(s) as indicated on the drawings will be used to arm and disarm the system.

B. Furnish and install a complete, addressable point, partitioned Intrusion Alarm System as described herein and as shown on the Plans; to be wired, connected, and left in first class operating condition. The system shall use programmable, multiplex, initiating device circuits with individual point identification, device supervision, primary and standby power. Include control panel(s), automatic detection devices, sirens, flashing lights, all wiring, connections to devices, outlet boxes, junction boxes, and all other necessary material for a completely reliable and fully functional system.

C. The system shall meet ALL of the requirements listed in Section 27 0000 Low Voltage Systems General Requirements PART 3 “Testing & Complete System Functionality”, prior to “Substantial Completion”.

D. Contractual information, guidelines, requirements, or other work specified to provide a fully functional system for Section 28 1600 Intrusion Alarm System includes, but is not limited to the sections identified in Section 27 0000.

1.03 SYSTEM OPERATION

A. The system shall be armed, disarmed, reset, monitored and altered by the use of an LCD Keypad and shall be capable of supporting up to eight (8) keypads. All points of identification shall clearly indicate the device type, room name, and room number. The system shall provide "fail safe arming" preventing arming of the system if a zone has been violated. It shall indicate which device is not ready for arming at the remote keypad(s).

B. Point identification of devices and their respective locations, shall be displayed at the keypad, reported to the remote monitoring agency.

C. The building shall be divided into the partitioned zones as indicated on the drawings and/or these specifications. A partition is defined as an area of protection, provided with its own keypad and group of sensors, connected to the main building system, whose operation in totally independent from a different section of the building or structure. Operation is similar to that of a completely separate control panel, keypad, or system.

D. Actuation of any monitored device shall cause the following to occur:

1. Display device name, type, location within the building, and alarm device unique addressable point nomenclature at the LCD keypad.

2. Activate the built-in digital communicator, seize the protected premises telephone line and automatically report the alarm point/device to the remote monitoring agency.

1.04 QUALITY ASSURANCE

A. The system, devices, and equipment, shall be manufactured under the appropriate category by Underwriters' Laboratories, Inc. (UL), and shall bear the UL label. Partial or pending listings are not acceptable. The installation of EACH device and/or component shall be in compliance with the UL listing. The system, devices, and equipment shall fully comply with the latest issue of these standards, where applicable, which includes, but is not limited to:

1. National Fire Protection Association (NFPA) - USA:

a. NFPA 70 National Electrical Code

b. NFPA 71 Central Station Signaling Systems-Protected Premises Unit

c. NFPA 72 National Fire Alarm Code

d. NFPA 101 Life Safety Code

2. Underwriters Laboratories Inc. (UL) - USA:

a. UL 365 Police Station Burglar Alarm Units and Systems

b. UL 464 Audible Signal Appliances

c. UL 609 Local Burglar Alarm Units and Systems

d. UL 864 Control Units for Fire Protective Signaling Systems

e. UL 1076 Control Units for Burglar Alarm Proprietary Protective Signaling Systems

f. UL 1610 Central Station Burglar Alarm Units

g. UL 1635 Digital Alarm Communicator System Units

B. Meet or Exceed Building Codes and Standards:

1. Local Authority Having Jurisdiction (AHJ) Requirements

2. State:

a. WAC 51-20 Washington Barrier Free Regulations:

3. National:

a. National Electrical Code (see NFPA 70)

b. Americans with Disabilities Act

4. International:

a. International Building Code

b. International Mechanical Code

c. International Electrical Code (see NFPA 70)

d. International Fire Code

C. Approvals:

1. The system shall have proper listing and/or approval from the following nationally recognized agencies:

a. UL Underwriters Laboratories Inc.

b. ULC Underwriters Laboratories Canada.

c. Factory Mutual.

2. The Intrusion Alarm Control Panel shall meet UL Standard 864 and UL Standard 1076.

D. The Installing Vendor shall, at a minimum, provide and/or perform on-site installation assistance to the Contractor throughout the duration of the project, up to and including acceptance of the System as defined in Section 27 0000 “Testing and Complete System Functionality”.

E. Service and Software Modifications:

1. Provide the services of a Manufacturer Certified/Authorized Technician to perform all system software modifications, upgrades or changes.

2. For non-emergency service, response time of the technician to the site shall not exceed 4 hours. If the call is received by the Installing Vendor before 1:00pm, service shall be provided that day, and if the call is received after that time, then the response shall be the following business day.

3. Provide all hardware, software, programming tools and documentation necessary to modify the system on-site. Modification includes addition and/or deletion of system devices, changes to system operation, and custom label changes for devices. The system structure and software shall place no limit on the type or extent of software modifications on-site.

1.05 SUBMITTALS AND SHOP DRAWINGS:

A. See Section 27 0000 Low Voltage Systems General Requirements for this information.

B. Data Sheets and Other Documentation:

1. The Materials List shall identify the specification section, quantity of each item, the manufacturer, model number, and brief description of each item.

a. Provide data sheets for each item listed on the materials list.

b. Provide indicating arrows on data sheets that have multiple items on the data sheet.

2. Pre-Installation Project Kick-Off Meeting:

a. The Installing Vendor shall provide the Meeting Minutes for the Pre-Installation project kick-off meeting.

3. Follow up documentation for the pre-Installation project kick-off meeting shall be provided as described under “Coordination” identified elsewhere in this specification.

C. Shop Drawings shall include the following items:

1. The System Riser Diagram shall show each system typical component connected at each location, cable routing, cable size and quantities.

PART 2 - PRODUCTS

2.01 MATERIALS

A. See Section 27 0000 Low Voltage Systems General Requirements for additional requirements.

B. Bosch manufactures the products that are used for the basis of design for this specification.

C. Substitutions will not be approved on this project.

D. Provide ALL requested submittal documents in Training Materials listed elsewhere in this specification.

E. Submit the “System Device Naming Matrix” listed elsewhere in this specification, with the Data Sheet submittal.

F. Provide all equipment as defined in the specification(s) and shown on the drawings.

G. Refer to PART 1 for any equipment that is not specifically defined.

2.02 COORDINATION

A. The Installing Vendor shall include each of the following items in their bid for this project.

B. Refer to “Submittals” for additional coordination requirements.

C. Pre-Installation Project Kick-off Meeting: The Installing Vendor shall contact the Electrical Contractor for the purpose of confirming the actual date of and attending the Pre-Installation Project Kick-Off Meeting at the location selected by the Owner (somewhere within the District). This meeting shall take place PRIOR to Submittal of equipment data sheets. The Installing Vendor shall be responsible for providing the following items.

1. Submitting a list of questions and their list of coordination items through the Construction Channels a minimum of 14 Days in advance of the meeting for Owner review.

2. A sign in sheet (with the project name, Section number and title that the Installing Vendor is representing, date, time, location, the printed name of each person in attendance, their title, phone number, and email address). Be responsible for taking Meeting Minutes, typing them into a formal document, and distributing them via email to each attendee.

3. The items discussed at the Pre-Installation project kick-off meeting shall include, but not be limited to:

a. General location of equipment and other items.

b. General questions about system operation, function, and programming.

c. The placement of wall mounted Equipment shall be identified, discussed, and confirmed for the placement of the equipment in the MDF Room and EACH designated IDF location.

D. Follow Up Documentation for The Pre-Installation Project Kick-Off Meeting: The purpose of this information is to illustrate to the Owners Representative that the information discussed during the Pre-Installation Project Kick-Off Meeting was understood by the Installing Vendor.

1. Each of the above items and items discussed during the meeting shall be included in the Data Sheet Submittals.

2.03 INTRUSION ALARM CONTROL PANEL (IACP)

A. Approved Intrusion Alarm Control Panel (IACP) Manufacturers:

1. Bosch: Model # B9512G.

B. Provide one (1) Intrusion Alarm Control Panel (IACP) and communicator as shown on the drawings. EACH IACP shall be a microprocessor based control panel. All eight master zones shall be individually programmable to support 599 individually annunciated points of protection. Points of protection are annunciated with custom text at the Remote LCD Keypad.

1. This installation shall use addressable modules for EACH device and shall display a unique point identification label on the LCD Keypad.

2. The IACP shall be listed by UL for Power Limited Circuits and the central processor control panel that controls all functions of the system shall be an integral UL listed commercial fire and burglary digital communicator.

3. The control panel metal enclosure shall be lockable with a key.

C. IACP Components and Related Equipment: Provide quantities as required. Depending on system requirements, this may include but is not limited to the following items:

1. Furnish one (1) Transformer Enclosure for the Intrusion Alarm Control Panel (IACP) shown on the drawings.

a. Bosch: Model # D8004.

2. Dual Phone Line Switcher:

   a. Furnish all necessary wiring, RJ31X jacks, modular harness(s), and cabling, as required for connection to Owner furnished telephone lines. Provide programming, final testing using the communication protocol as necessary so that this information is reported to the remote monitoring agency. Coordinate with Owner, as required.

   b. Bosch: Model # D928.

3. Alarm Status Relay:

   a. Bosch: Model # D811.

      1) Section 28 1300 Access Control System shall monitor the Alarm Status of the Intrusion Alarm System. Provide connections and programming as required.

4. Powered Loop Interface Module:

   a. Bosch: Model # D125B.

5. Dual Battery Harness:

   a. Bosch: Model # D122.

6. Enclosure:

   a. Bosch: Model # D8103.

7. Lock and Keys for Enclosure:

   a. Bosch: Model # D101.

8. Mounting Skirt:

   a. Bosch: Model # D9002-5.

9. Tamper Switch:

   a. Bosch: Model # D110.

10. Adapter:

    a. Bosch: Model # MP203.

11. LAN/WAN Interface:

    a. Furnish all necessary wiring, RJ45 jacks, modular harness(s), and cabling, as required for connection to the Owners existing WAN.

Programming, final testing, and using the communication protocol as necessary so that all IACP information is reported simultaneously to the remote monitoring agency and the Owners Server and/or workstations.

b. Coordinate with the Owners IT Department for the issuing of the Static IP address(s) and insuring proper communication over the LAN/WAN.

2.04 INTRUSION ALARM POWER SUPPLY (IAPS)

A. The Intrusion Alarm Control Panel shall NOT be used to power any low voltage device, except for nominal voltage on the addressable data circuits.

B. Use an Intrusion Alarm Power Supply(s) (IAPS's) as required for serving all Intrusion Alarm devices that consume 12vdc or 24vdc power. The power supply shall be U.L. listed, have sixteen (16) Class 2 Rated PTC Power Limited outputs and a key locking enclosure. The IACP shall have automatic switch over to stand-by batteries when AC power fails, and have AC fail supervision which is a Form "C" contact closure upon loss of power. Connect as required, one (1) addressable module to monitor AC power for EACH IAPS that is provided for this system. The power supply shall be capable of supplying 4.0 Amps or 6.0 Amps.

C. At a minimum, provide one (1) IAPS at EACH location shown on the drawings. If additional IAPS's are needed, provide the quantities as required for a fully functional system, while maintaining the design requirements that are defined elsewhere in these specifications.

D. Altronix: Model # AL400ULXPD16CB or approved equal.

2.05 SURGE SUPPRESSION

A. Provide one (1) dedicated TVSS/SPD at EACH 120vac hard wired connection point.

B. Provide manufacturer and model number as specified in Section 26 4300.

2.06 BATTERY BACKUP FOR COMPLETE SYSTEM OPERATION

A. Battery backup power shall be an integral part of the Intrusion Alarm system.

B. Provide and install gel-cell, maintenance free batteries, as required. Provide battery backup power for the entire Access Control system to provide one (1) hour of standby operation. Batteries shall be sized to provide at least 20% spare capacity.

C. Provide quantities as required for maintaining or exceeding the submittal calculation requirements listed elsewhere in Section 27 0000 "Submittals and Shop Drawings".

D. EACH Power Supply shall have automatic switch over to stand-by batteries when AC power fails. The power supply/charger shall be an integral portion of the control panel and/or power supply and be capable of charging fully discharged system batteries to 100% in 8 hours.

E. All batteries shall be placed inside a key lockable, metal enclosure that is approved by the manufacturer.

F. Each battery shall have the date of installation written on the battery with a permanent marker. The date shall be legible and clearly written in 1" numbers and be visible when the enclosure door is open.

2.07 KEYPAD FOR REMOTE OPERATION

A. Provide one (1) LCD Keypad, adjacent to the IACP and at EACH location shown on the drawings. The Keypad(s) shall have the following features:

1. An illuminated, backlit keypad.

2. Multi-line alphanumeric English language LCD display.

3. A built-in sounder that emits several distinct warning tones.

4. Remote control or relays.

5. User-programmable pass codes.

6. System diagnostic tests.

B. Bosch: Model # D1260B. Provide quantities shown on the drawings.

2.08 FIELD DEVICES

A. Provide one (1) addressable module and/or addressable input for EACH Intrusion Alarm device and related equipment as shown on the drawings.

B. Addressable Module(s): Use the addressable module that when the system is laid out, it follows a logical sequence, unless otherwise noted elsewhere in the drawings or specifications. Provide quantities as required.

C. Door Position Switches (DPS's): Coordinate with the Division 8 Door Hardware supplier, prior to bidding or ordering any equipment. Provide the appropriate style of Door Position Switch and application appropriate magnet for each type of door. Each switch shall be UL listed and 100% Manufacturer tested prior to installation.

1. Provide DPS(s) at EACH exterior door location.

a. For EACH single door locations, provide one (1) DPS.

b. For EACH double door locations, provide two (2) DPS's.

2. Recessed Mount:

a. Recessed Mount: GRI; Model # 199-12WG.

3. Roll-up Doors:

a. Each switch shall be provided with the magnet, for the roll-up doors application and all necessary mounting brackets as recommended by the manufacturer. Provide all necessary mounting brackets and fasteners, as recommended by the manufacturer.

b. GE (formerly Sentrol): Model #2202AU-L.

D. Motion Detectors: All motion detectors shall utilize Tri-Tech features and be UL listed. Provide one (1) Motion Sensor at EACH location as shown on the drawings.

1. Wall Mount: The Motion Sensor shall offer wall or corner mounting.

a. Bosch: Model # ISC-PDL1-W18G or newest version available.

b. Accessories for the Motion Sensor:

1) Provide one (1) Gimbal-mount bracket for EACH Motion Sensor.

2) Bosch: Model # B328.

2. Ceiling Mount: The Motion Sensor shall offer the detection pattern applicable to area served.

a. Bosch: Model # DS9370 or newest version available.

3. Curtain: The Curtain Motion Sensor shall offer a long-range narrow detection pattern in the area served.

a. Bosch: Model # ISC-PDL1-WC30G or newest version available.

b. Accessories for the Motion Sensor:

1) Provide one (1) Gimbal-mount bracket for EACH Motion Sensor.

2) Bosch: Model # B328.

E. Glassbreak Detectors: All glassbreak detectors shall utilize sound analysis technology for audio detection and be UL listed. Provide one (1) Glassbreak Detector at EACH location as shown on the drawings.

1. Wall/Ceiling Mount: The Glassbreak Sensor shall be suitable for wall or ceiling mount.

a. Bosch: Model # DS1103i or newest version available.

b. Accessories for the Motion Sensor:

1) Provide one (1) Gimbal-mount bracket for EACH wall-mounted Motion Sensor.

2) Bosch: Model # B328.

2.09 SPARE CAPACITY

A. Spare capacity to add additional devices in the future shall be an integral part of the system design.

B. Within the Building and Other Structures:

1. Low Voltage Power – Regardless of where the low voltage circuit is in the building, each individual cable run shall not exceed 80% of the Amp Draw load capacity of each run.

2. Addressable Devices – The system design should be able to add no less than Twenty (20) additional addressable devices for EACH of the following sections;

a. Each area or wing of the building.

b. Each floor shall be divided into two equal areas

1) For projects with more than one floor (or level), then each floor (or level) shall also be divided into two equal areas.

2.10 FLEXIBILITY IN SYSTEM DESIGN LAYOUT

A. Where indicated on the drawings, the Installing Vendor shall have the flexibility in their design to provide system equipment at any of the MDF/IDF's and/or Systems Plywood Back Board locations that are SPECIFICALLY identified on the drawings for this equipment.

B. Provide all quantities of equipment as specified, while maintaining the "Spare Capacity" requirements listed elsewhere within this specification.

C. Coordinate the exact location of field devices with the Architect, prior to installation.

2.11 SYSTEM DEVICE NAMING MATRIX

A. The installing Vendor shall include in the pricing of their bid, the time and materials to generate and create a single System Device Naming Matrix. From left to right, list the information for EACH device, which shall include, but not be limited to the following;

1. Each row shall have an “Item #”.

2. The device name (i.e.: Motion Sensor, Door Position Switch, etc.).

3. The device abbreviation.

   a. This is a sample abbreviation that could be used: (i.e., Motion Sensor = MS, Door Position Switch = DPS).

4. List the Serial Number for EACH device.

5. The device ID number.

6. Device model number.

7. Device Location (for example; South Wing Side Door, MDF Room XXX, etc.).

8. For other system equipment (such as “Head end Equipment”), add rows to the bottom of the matrix, and list the appropriate information.

   a. Group this information by location. Such as MDF Room XXX, IDF Room XXX, etc.

B. Use the maximum characters allowable from the system, to be incorporated into a fully functional system.

1. At the Top of the Matrix, state the Maximum number of characters that are available.

C. Submit this information with the Submittals and Shop Drawings in 11’ x 17’ format, or smaller.

D. Prior to ANY system programming, obtain written approval from the Architect of the System Device Naming Matrix. Make corrections as noted.

E. Using the Matrix that is included at the end of this specification (see Exhibit 'A' for a partial sample format), the Installing Vendor shall create a spread sheet and identify EACH system device and description. For room or area abbreviations that are not listed or if there is more than one room or area of the same name, use a reasonable and logical name.

1. The Matrix shall have consistent information of EACH device for EACH Site.

2. Each system device shall be wired and programmed to communicate to the IACP(s) to display this information on EACH LCD Keypad, and to report this information to the Owners designated Monitoring Station, system Server, and Workstation(s), which shall indicate EACH separate system device abbreviation, as indicated on the System Device Naming Matrix.

2.12 SYSTEM CABLES, CONNECTORS, AND PATCH CORDS

A. See PART 3 of this specification and Section 27 0000 for additional requirements.

B. ALL cables and conductors shall be the same size and color throughout EACH cable run. Such as from EACH field device to the terminals on the IACP and Power Supply.

1. The color of the overall cable jackets shall be green. If this color is not available, provide a permanent colored marking in green on the cable for every 10'-0" of cable for the duration of the cable run.

C. Cables/Conductors: The minimum allowable size conductors are specified below. Use larger conductors and/or additional conductors, as required. Prior to Bidding, consult with the system Manufacturer that the following cable types are acceptable. It shall be the Installing Vendors responsibility to provide and install Manufacturer approved cables. Use the Manufacturers equivalent cable requirements, to meet all code requirements [such as "Wet Rated" or "Aerial Rated" cable] for the appropriate devices.

1. CAT6 Cable(s):

a. Refer to Section 27 2000.

2. CAT3 Cable(s):

a. Refer to Section 27 2000.

3. D8125 MUX Addressable Data Protocol Field Devices:

a. Non-Plenum: West Penn: Model# 244 (18/4ns), or approved equal.

b. Plenum: West Penn: Model# 25244B (18/4ns), or approved equal.

4. Serial Data Bus (SDI) Data Protocol for LCD Keypads:

    a. The length of the cable run shall not exceed 1,000 feet.

    b. Non-Plenum: West Penn: Model# 244 (18/4ns), or approved equal.

    c. Plenum: West Penn: Model# 25244B (18/4ns), or approved equal.

5. Non-addressable initiating field devices shall have the addressable module installed at the device.

6. Motion Sensors (MS):

    a. Non-Plenum: West Penn: Model# 244 (18/4ns), or approved equal.

    b. Plenum: West Penn: Model# 25244B (18/4ns), or approved equal.

7. Door Position Switches (DPS's):

    a. Non-Plenum: West Penn: Model# 221 (22/2ns), or approved equal.

    b. Plenum: West Penn: Model# 25221B (22/2ns), or approved equal.

D. Connectors/Terminations: Use the manufacturer approved wire strippers and crimping tool as required.

1. CAT6 cable(s):

    a. Refer to Section 27 2000.

2. CAT3 cable(s):

    a. Refer to Section 27 2000.

3. Maintain all cable and system requirements.

E. Patch Cords: Size EACH cable length to provide ease of maintenance, while not leaving excessive slack.

1. CAT6 cable(s):

    a. Refer to Section 27 2000.

2. CAT3 cable(s):

    a. Refer to Section 27 2000.

3. Maintain all cable requirements.

2.13 TEST FORM

A. See Section 27 0000 Low Voltage Systems General Requirements for “Test Forms” and “Testing & Complete System Functionality”, and “Testing” listed elsewhere in this specification for more information.

B. The Installing Vendor shall include in the pricing of their bid, the time and materials to generate and create the documentation, as described below. From left to right, list the information for EACH software feature set and for EACH device.

1. Provide a Pass, Fail, and N/A column. This shall be checked off during the course of the Testing process, to determine a “Pass” or “Fail”.

2. To obtain a 100% Passing Test EACH row shall have; a “Pass”, all answers shall be yes, and shall NOT have any negative comments.

3. List the name (i.e.: Motion Sensor, Door Position Switch, etc.).

4. List the Serial Number for EACH device.

5. List the device ID number.

6. List the Device model number.

7. List the Device Location (for example; South Wing Side Door, MDF Room XXX, etc.).

8. The Test Forms shall have the following categories;

   a. Equipment and Devices;

      1) Use the information on the System Device Naming Matrix as the basis for this form.

      2) Provide a separate row for EACH item/equipment/device test listed below.

   b. Submit this information with the Submittals and Shop Drawings in 11’ x 17’ format, or smaller.

9. The Test Forms shall include EACH of the items identified in “Test Forms” and the following tests listed below, but shall not be limited to the following;

   a. Equipment and Device Testing:

      1) For Data Cable(s): Refer to Section 27 2000.

      2) Motion Sensors:

3) Has EACH Motion Sensor detection pattern been “walk tested” for the appropriate room or area location?

4) Is the “look down” sensor enabled?

5) Raceway, Cabling, and Terminations:

6) General:

7) Is EACH of the cable type(s) provided/installed as specified?

8) Are EACH of the cable runs installed without any splices?

9) Do all cables maintain their minimum bend radius?

10) Is EACH cable labeled as specified?

11) Have EACH of the cable runs been combed and are tangle free?

12) Systems Plywood Backboard(s):

13) Is the Service Loop located above or near EACH of the Systems Plywood Backboard(s) as specified?

14) Is the cabling installed in a neat and organized manner?

15) Is the equipment installed in the correct location, which leaves plenty of room for expansion, as specified (i.e.: NOT in the middle of the backboard).

16) Are the approved wire fasteners and wire ties installed?

17) Terminations:

18) Are EACH of the approved connectors provided and installed as specified?

19) Are EACH of the cables terminated as specified?

20) Intrusion Alarms Control Panel (IACP):

21) Is the IACP installed correctly?

22) Are the cables combed and dressed neatly?

23) Power Supplies:

24) Is EACH of the system Power Supplies installed correctly?

25) Is EACH of the system Power Supplies functioning correctly after removal of the primary AC power?

26) Does the IACP log in the event history, the loss of primary AC power for EACH Power Supply as specified?

2.14 ADDITIONAL INTRUSION ALARM EQUIPMENT

A. See Part 3 of this specification for additional provision of system Equipment and/or Labor.

PART 3 - EXECUTION

3.01 GENERAL

A. See Section 27 0000 Low Voltage Systems General Requirements for additional information.

B. See Section 27 2000 Data and Voice Infrastructure for additional cable and installation requirements.

C. Prior to rough-in, coordinate with the Architect for the exact location(s).

D. Install all cabling, devices, and/or equipment per the manufacturer's recommendation.

E. Coordinate with the Owner for final program settings.

3.02 INSTALLATION

A. Setup, connect, and configure the system per the manufacturer's recommendations to operate as intended. Load, configure, and test the software for a fully functional system.

B. T-Tapping of Addressable device conductors is acceptable, when all of the manufacturer's requirements for the MUX protocol are fulfilled.

1. T-Tapping of Notification device conductors is NOT acceptable.

3.03 MOUNTING HEIGHTS, LOCATIONS, AND SETTINGS

A. Prior to rough-in, coordinate with the Architect for the exact location(s). Install all devices and/or equipment per the manufacturer's recommendation.

B. The IACP shall be mounted at 60" from the finished floor to the top of the enclosure, and shall be level.

C. Prior to Bidding, coordinate with the Installing Vendor(s), for actual quantities and locations of power requirements (see “Intrusion Alarm Power Supply” and “Flexibility in System Design Layout” in PART 2 of this specification). At a minimum, provide 120vac wiring and connections to EACH the IACP Transformer Enclosure for the IAPS as shown on the drawings and as required for a fully functional system, while maintaining all of the design requirements described elsewhere within these specifications. This shall include the following;

1. Install the Transformer Enclosure (with duplex 120vac outlet located inside the enclosure) at the following location(s);

   a. Provide and Install one (1) Transformer Enclosure above the IACP location shown on the drawings.

   b. The bottom of each Transformer Enclosure shall be a minimum of 6” inches above the accessible ceiling tiles (where applicable) or 8’-0” above the finished floor, directly above the Intrusion Alarm Control Panel.

   c. Provide one (1) ¾ inch conduit between the Transformer Enclosure to the Intrusion Alarm Control Panel, for the purpose of running a power cable from the plug-in transformer (within the Transformer Enclosure) down into the IACP.

D. The Keypad(s) shall be mounted at 48” from the finished floor to the top of the Keypad, and shall be level.

E. Motion Sensors:

1. Ceilings Mount – Install per manufacturer’s recommendations.

2. Wall Mount motion sensors shall be mounted:

   a. Install per manufacturer’s recommendations and at 8’-0” above the finished floor, unless approved by the Architect.

   b. Provide (1) 4-square junction box with a single-gang reducing ring and (1) 1” conduit up to the accessible ceiling space for EACH motion sensor.

   c. Locate on a perimeter wall. The detection pattern shall NOT face toward exterior windows.

   d. Sensor shall be switch selected to provide a 25’-0” x 32’-0” protection pattern.

   e. Enable the bottom “look down” sensor.

   f. Enable the anti-masking feature.

g. The following hard-wired contacts shall be monitored:

1) Alarm contact closure shall be monitored by an addressable point.

2) The Trouble contact closure shall NOT be monitored.

3) The Tamper switch contact closure shall NOT be monitored.

h. Prior to rough-in, consult with the manufacturer. Upon their suggestion, install the Gimbal-mount bracket where required for proper detection.

i. Adjust each sensor as required per the manufacturer's recommendations for each area and location. Walk test each device to confirm the detection pattern area is set correctly.

j. When all adjustments have been completed, leave the detection LED's in the active mode. The Owner wants to view the LED's at all times.

3.04 ADDRESSABLE MODULE INSTALLATION

A. Single Input Addressable Point Module(s) shall be used for EACH device as outlined below.

B. Motion Sensors:

1. The addressable input module shall be installed inside the motion sensor or installed inside the Motion Sensor Junction Box, and monitor the "Alarm" contact.

C. Provide a device cable from each of the following non-addressable field device to an Addressable Module Junction Box;

1. Loss of Primary Power:

a. For Loss of Primary Power, wire the IAPS's relay output to a separate single addressable input.

D. The Addressable Module Junction Box(s) shall consist of the Addressable Module being installed in a 4-square junction box (with a blank cover) 6" to 12" above the accessible ceiling.

1. For doors, install the junction box on the hinge side of the door, and approximately 5'-0" from the door on parallel or perpendicular walls, to accommodate servicing this unit without blocking the doorway. From the junction box, wire the door contacts as recommended by the manufacturer.

2. For other devices that are out in the open, or require the addressable module to be installed in a location other than at the device, install the addressable module in a logical location on the nearest wall that is a minimum of 5’-0” from the nearest doorway. Indicate on the As-builts where the junction box is for each device.

3. Conceal all wiring within the walls and/or ceiling, as required.

3.05 PROGRAMMING AND CONFIGURATION

A. The Installing Vendor shall program the system as coordinated with the Owner, as described throughout this specification, and as required for a fully functional system.

B. The Installing Vendor shall program the Configuration Files of the system to be automatically backed up onto the Owners Designated Server. These backups shall occur once per week. Coordinate with the Owners IT Department, as required.

C. The partitioning of the system, shall be programmed as follows;

1. As shown on the Drawings.

2. As coordinated with the Owner.

D. For Bidding Purposes, the Installing Vendor shall be expected to program the system to Industry Standards, based on a project of this size, scope, typical functionality for this market segment, and as described throughout this specification.

1. Review the testing requirements specified elsewhere within this specification for additional information.

3.06 TESTING

A. See Section 27 0000 Low Voltage Systems General Requirements for “Test Forms” and “Testing & Complete System Functionality”, and “Test Forms” listed elsewhere in this specification for more information.

B. The Installing Vendor shall provide the staff and necessary equipment to meet or exceed the testing requirements.

C. The Installing Vendor shall provide the Staff, walkie-talkies, test equipment, additional equipment, resources, and time necessary to support the Owner to provide the Commissioning of this Systems. The installing Vendor shall demonstrate to the Owner the complete operation of each device, head end functionality, system configuration, and software functionality. The Installing Vendor shall also make adjustments to the equipment and changes to the program settings, as requested.

3.07 TRAINING

A. Training for Site Staff:

1. The training sessions shall be held at the project site.

   a. Provide Training for up to ten (10) Site Staff.

   b. Provide a total of two (2) separate training sessions for the Owners personnel. Schedule both training sessions with the Owner, providing a minimum of 14 days advance notice, and offer a minimum of three dates to choose from.

2. The Second Training Session(s) shall take place approximately 6 – 12 weeks after the facility has been fully occupied and in full operation.

3. The Training Session shall consist of:

   a. Providing the printed Training Manuals to EACH attendee.

   b. Being conducted by one of the designated Installing Vendor technicians. The training shall be a minimum of one (1) 2-Hour session that shall be held on the same day, and provide a thorough and in depth full feature training session. Provide additional training time as required, to answer EACH of the staff's questions, at no additional cost to the Owner. This training shall address the Owners requirements identified on the documents.

3.08 AS-BUILTS

A. Provide all As-Built documentation as defined in Section 27 0000 Low Voltage Systems General Requirements and listed elsewhere in this specification.

B. Update all documents provided in the Submittal and Shop Drawings to accurately reflect the actual equipment that was provided for this project, and the actual locations of the installed equipment.

C. The Installing Vendor shall include in the pricing of their bid, the time and materials to generate and create the documentation, as described below.

1. Provide an "Equipment Information Sheet", in the O & M manuals. At a minimum, from left to right, provide the following information;

   a. Manufacturers Name.

   b. Equipment Device Type (such as Workstation, Control Panel, etc).

   c. Location (such as MDF room 103, or area of building).

   d. IP Address.

e. Software Name.

f. Software Version that is installed on the device.

g. List the “Highest Level” configurable password for EACH device.

h. List “EACH System Operator” password.

i. List all other password settings for EACH device.

j. See “Equipment Information Sheet” sample on the following page.

Exhibit 'A' (Page 1 of X)					
Project Name Here System Device Naming Matrix					
Floor of bldg	**Area of bldg**	**Area Name**	**Area Abbreviation**	**Room Number *or* Device Location**	**Device Type**
_ _ = Not Applicable	N_	Class	Class	205_	DPS= Door Position Switch
U_ = Upper Floor	Nw	Office	Office	108a	_DA= Duress Alarm
L_ = Lower Floor	Ne	Portable	Port_	P16_	_TS= Tamper Switch
	S_	Container Storage (Near Portables)	Cont_	Stor= Storage	MSa= Motion Sensor Alarm
	Sw	Communications Room	Comm_	Room	MSt= Motion Sensor Trouble
	Se	Front	Front	Door	MSm= Motion Sensor Tamper (Meddle with sensor)
	W_	Side	Side_	Hall	Fzr= Freezer Alarm (Loss of Power)
	E_	Rear	Rear_	Area	Pwr= Loss of 120vac Power
	Mn=Men	Rest Room	Rest_	Encl= Enclosure	
	Wn= Womens	Locker Room	Lockr	_ _ _ _ = Not Applicable	
		Roll Up Door	Roll_		
		Electrical	Elect		
		Janitor	Jan_ _		
		Gymnasium or Multipurpose room	Gym_ _		
		Music	Music		
		Speech	Spech		
		Science	Scien		
		Computer Lab	Comp_		
		Work Room	Work_		
		Break Room	Break		
		Kitchen	Kitch		
		Boiler Room	Boilr		
		Shop	Shop_		
		Storage	Stor_		

END OF SECTION

SECTION 28 3100

FIRE ALARM SYSTEM

PART 1 - GENERAL

1.01 GENERAL

A. **The Fire Alarm System for this project shall be a Silent Knight / Farenhyt Brand System.**

1. Alternate Systems allowed:

   a. Gamewell E3

   b. Notifier NFS2-3030

B. The Fire Alarm System design for this project is based upon an existing _____ system.

C. Substitutions of the specified Fire Alarm will be not be allowed.

D. Includes, but not limited to, the following:

1. Provide all material, labor, equipment, design, and services necessary to modify the existing installation perform the installation of a complete, fully operational, intelligent (analog) and addressable (digital), low voltage 24 Volts D.C., point identification, microprocessor-based Fire Alarm System, in accordance with the required and advisory provisions of the latest edition of N.F.P.A. #72 accepted by the Authority having Jurisdiction **(City/County of ?)** and project specifications, except as modified herein.

2. The Contractor is to obtain a permit and final approval from **(City/County of ??)** for the Fire Alarm System. All permits, fees for plan review, inspections, testing, etc. shall be included in the bid proposal.

3. The Fire Alarm System Contractor shall simultaneously submit "Shop Drawings", Back-up Battery Calculations, Voltage Drop Calculations, Manufacturers Data Sheets, and a bond copy of each proposed Graphic Map to the local Authority Having Jurisdiction and Architect/Engineer for review that shall be approved by the Architect/Engineer prior to the purchase, fabrication, or installation of any system components as detailed in Paragraph 1.18 of Specification Section 28 3100.

4. Products shall be domestically made and comply with the requirements of the “Buy American Act - Construction Materials Under Trade Agreements”.

E. By submitting a bid, the Fire Alarm System Contractor is acknowledging that he has made a thorough examination of the Contract Documents, existing site and building conditions, and has determined that these documents do sufficiently describe the scope of construction work required under this Contract.

1.02 RELATED DOCUMENTS

A. Drawings, General Conditions and Supplementary Conditions of the Contract, including Division 0 and Division 1 Specification Sections apply to work of this Division.

B. Environmental Protection Requirements: The work of this Section is part of the overall requirements to comply with the Environmental Protection, Hazardous Materials, and Green Procurement Requirements. Comply with Section 01 5700 – Environmental Protection.

1.03 RELATED SECTIONS

A. The following sections apply to this section:

1. Section 26 0000 "ELECTRICAL GENERAL CONDITIONS".
2. Section 26 0005 "ELECTRICAL – EXISTING SYSTEMS".
3. Section 26 0519 "WIRES AND CABLES".
4. Section 26 0526 "GROUNDING AND BONDING".
5. Section 26 0532 "OUTLET AND PULL BOXES".
6. Section 26 0533 "RACEWAY".
7. Section 26 2726 "SWITCHES AND RECEPTACLES".
8. Section 27 0000 "LOW VOLTAGE SYSTEMS GENERAL REQUIREMENTS".
9. Section 28 3133 "AIR SAMPLING SYSTEMS".

1.04 CODES AND STANDARDS

A. Codes and agencies having jurisdictional authority over Fire Alarm System installations.

1. International Building Code – Latest Adopted Edition.
2. International Mechanical Code – Latest Adopted Edition.
3. International Fire Code – Latest Adopted Edition.

4. Authority Having Jurisdiction (Local Fire Marshal).

5. Occupational Safety and Health Administration (OSHA).

6. Washington Industrial Safety and Health Act (WISHA).

7. National Fire Protection Association (N.F.P.A.).

8. ANSI-J-STD-607-A Commercial Building Grounding and Bonding Requirements for Telecommunications.

9. Americans with Disabilities Act (ADA).

10. State of Washington Electrical Code.

11. State of Washington Administrative Code (WAC).

12. State of Washington Labor & Industry (L&I).

13. Revised Code of Washington (RCW).

14. American Society for Testing and Materials

15. National Board of Fire Underwriters

16. National Electrical Safety Code

17. National Electrical Manufacturers Association

18. Electrical Testing Laboratories

19. U.L. Fire Protection Equipment Directory

20. Underwriters Laboratories Incorporated (U.L.):

a)	UL #5	Standard for Surface Metal Raceways and Fittings
b)	UL #38	Standard for Manual Signaling Boxes for Fire Alarm Systems
c)	UL #50	Enclosures for Electrical Equipment, Non-Environmental Considerations
d)	UL #228	Standard for Door Closers-Holders, With or Without Integral Smoke Detectors
e)	UL #268	Smoke Detectors for Fire Alarm Systems
f)	UL #268A	Standard for Smoke Detectors for Duct Application

g)	UL #346	Standard for Waterflow Indicators for Fire Protective Signaling Systems
h)	UL #464	Standard for Audible Signal Appliances
i)	UL #497A	Standard for Secondary Protectors for Communications Circuits
j)	UL #521	Standard for Heat Detectors for Fire Protective Signaling Systems
k)	UL #827	Standard for Central-Station Alarm Services
l)	UL #864	Standard for Control Units and Accessories for Fire Alarm Systems
m)	UL #1449	Standard for Surge Protective Devices
n)	UL #1481	Standard for Power Supplies for Fire-Protective Signaling Systems
o)	UL #1638	Standard for Visual Signaling Appliances - Private Mode Emergency and General Utility Signaling
p)	UL #1685	Standard for Vertical-Tray Fire-Propagation and Smoke-Release Test for Electrical and Optical-Fiber Cables
q)	UL #1730	Standard for Smoke Detector Monitors and Accessories for Individual Living Units of Multifamily Residences and Hotel/Motel Rooms
r)	UL #1971	Standard for Signaling Devices for the Hearing Impaired
s)	UL #1981	Standard for Central-Station Automation Systems
t)	UL #2075	Standard for Gas and Vapor Detectors and Sensors
u)	UL #60950	Information Technology Equipment – Safety

B. If any conflict occurs between Code Rules and this specification, the codes are to govern. Nothing in these drawings and specifications shall be construed to permit work not conforming to governing codes. Also, this shall not be construed as relieving the Fire Alarm System Contractor from complying with any requirements of the plans and specifications which may be in excess of, but not in conflict with, requirements of the Governing Codes.

1.05 DEFINITIONS

A. Thermal Envelope: The heat flow control layer (insulation for example) that separates the interior conditioned space from the exterior unconditioned space.

B. Cold Space: Spaces outside of the building's thermal envelope in which ambient temperatures are expected to be below 40°F.

C. Warm Space: Spaces within the building's thermal envelope in which ambient temperatures are not expected to be below 40°F.

D. Finished Spaces: Spaces used for habitation or occupancy where rough surfaces are plastered, paneled, or otherwise treated to provide a pleasing appearance.

E. Unfinished Spaces: Spaces used for storage or work areas, such as sprinkler riser rooms, mechanical rooms, electrical rooms, etc., where appearance is not a factor.

F. Exposed: Open to view i.e. a room that is not covered by other construction.

G. Concealed Spaces: Spaces out of sight i.e. above ceilings, below floors, between double walls, furred-in areas, pipe and duct shafts, and similar spaces.

H. **Replace:** All existing Fire Alarm System components and devices shall be demolished and discarded from the project site and new Fire Alarm System components and devices shall be installed in the "Scope of Work" areas indicated on the contract documents.

I. **Removed:** All existing Fire Alarm System components and devices identified on the contract documents shall be disconnected, taken down, and discarded from the project site. Removed items shall not be brought back to the project site for use or reinstallation.

J. **Reinstall:** Existing Fire Alarm System components and devices identified on the contract documents that are to be taken down and relocated to a new location for use.

K. Trades: Design documents or work performed by architectural, civil, electrical, fire protection, landscape, mechanical, plumbing, electrical, and structural.

L. Soffit: A ceiling that is secondary to the primary ceiling elevation that is at a lower elevation and is finished with gypsum wall board or other construction materials.

M. Provide: It shall be interpreted as "furnishing and installing complete in operating condition".

N. Drawings: It shall be interpreted as "all Contract Drawings for all Disciplines".

1.06 GENERAL SYSTEM REQUIREMENTS

A. It is the intention of this division of the specifications and the accompanying drawings to describe and provide for the furnishing, installing, testing and placing in satisfactory and successful operation all equipment, materials, devices and necessary appurtenances to provide a complete electrical & fire alarm system, together with such other miscellaneous installations and equipment hereinafter specified and/or shown in the plans. The work shall include all materials, appliances and apparatus not specifically mentioned herein or noted on the plans, but which are necessary to make a complete working installation of all electrical systems shown on the plans or described herein.

B. Modify the existing fully operational, intelligent (analog) and addressable (digital), low voltage 24 Volts D.C., "Class B", point identification, microprocessor-based Fire Alarm System that transmits a signal to the monitoring entity as described herein and as shown on the contract documents.

C. Provide and install a new complete, fully operational, intelligent (analog) and addressable (digital), low voltage 24 Volts D.C., "Class B", point identification, microprocessor-based Fire Alarm System that will transmit a signal to the monitoring entity as described herein and as shown on the contract documents.

D. The Fire Alarm System shall include, but not be limited to a control panel, Remote Power Supplies, peripherals, initiating devices, notification appliances, cabling, conduit, junction boxes, fittings, raceways, termination at field devices and panels, etc. required for a complete operating system even though each item may not be specifically mentioned or described in this specification section or on the contract documents.

E. Devices and equipment for Fire Alarm System service shall be U.L. listed or Factory Mutual Global approved for use in Fire Alarm Systems and of the manufacturer's current model.

F. The Fire Alarm Control Panel shall be listed under U.L. Category UOJZ as a single control unit and shall be U.L. Listed for Power Limited Applications per Article 760 of N.F.P.A. #70 (National Electrical Code).

G. The Fire Alarm Control Panel shall electrically supervise and monitor the integrity of all conductors of all circuits.

H. The Fire Alarm System Control Panel and peripheral devices shall be manufactured 100% by a single U.S. manufacturer (or division thereof).

I. The Fire Alarm shall be of modular design to facilitate both expansion and service.

J. The system shall be an active/interrogative type system where each addressable device is repetitively scanned, causing a signal to be transmitted to the Fire Alarm control panel indicating that each device, and associated circuit cabling, is functional.

K. All power or system shutdowns shall be coordinated with the Owner or Owner's representative with a minimum of (14) days advanced notice not exceeding four (4) hours. Provide temporary provisions for periods greater than four (4) hours with Lockout / Tagout procedures being used.

L. Equipment in compliance with U.L. standards but not bearing their label is not acceptable.

1.07 DEMOLITION

A. The Fire Alarm System (free standing or surface mounted), raceway (exposed) and conductors no longer in service as a result of this Contract shall be removed. Unused raceways or sleeves shall be cut flush at ceiling, floor, or wall and filled with grout.

1.08 PROTECTION OF NEW FIRE ALARM EQUIPMENT

A. The Fire Alarm System Contractor shall store and guard all equipment before installation and shall protect same, and replace any equipment that has been damaged prior to final acceptance.

1.09 HOUSEKEEPING

A. All electrical materials shall be kept stored in an orderly fashion protected from heat, cold, and the weather.

B. All marred surfaces shall be refinished and painted after installation.

C. All debris shall be removed from premises during work, as directed, and at completion of job.

1.10 TENANT IMPROVEMENTS

A. Add, delete, or relocate existing Fire Alarm System devices (as required) in the tenant improvement area(s) to reflect new walls, ceilings, H.V.A.C. grilles, and light locations.

B. New addressable Fire Alarm System devices that are to be installed in the tenant improvement area(s) shall be compatible with the existing Fire Alarm System Control Panel.

C. The Fire Alarm System in spaces outside of the tenant improvement area(s) shall remain 100% fully functional during construction within the tenant improvement area.

D. The existing Fire Alarm System located in the tenant improvement area that are to be removed and re-installed shall be cleaned per the manufacturers recommendations prior to re-installation.

1.11 COORDINATION

A. The work covered by this Specification Section shall be coordinated with the related work as specified elsewhere on the contract documents or in the project specifications.

B. The Fire Alarm System Contractor shall participate in the on-site coordination meetings to coordinate the Fire Alarm System installation with the Architectural features, H.V.A.C. grilles, electrical lights, fire protection sprinkler heads, and/or existing conditions.

C. Coordination meetings shall consider elevations, required clearances, and routings of all trades to assure that all trades can be installed without conflict.

D. The outcome of this coordination shall allow each system (Electrical, Mechanical, Fire Protection, etc.) to be installed without further conflicts for space or locations.

E. Failure to coordinate with other trades and/or existing conditions that result in the removal and re-installation of systems shall not be charged as additional costs.

1.12 PENETRATIONS

A. Fire Resistance Rated Penetrations:

1. Where Fire Alarm System conduit penetrates a fire resistance rated wall or floor assembly, the Fire Alarm System Contractor shall provide a fire rated penetration that maintains the integrity and fire resistance rating of the assembly being penetrated.

2. The fire resistance rated penetrations of walls or floor assemblies shall consist of one of the following:

   a. Cabling in Conduit: Fire Alarm System cabling installed in conduit shall be provided with sealant between the conduit and the wall or floor penetration

   b. Exposed Cabling: Fire Alarm System cabling installed exposed shall be provide with a section of conduit (sleeve) that extends past both faces of the penetration by a minimum distance of 6". Seal both ends of conduit (sleeve) with U.L listed or Factory Mutual Global approved material and sealant that maintains the fire resistance rating of the assembly being penetrated. Provide fire resistance rated sealant to both sides of assembly penetration between the conduit (sleeve) and the wall or floor assembly.

c. Exposed Cabling: Fire Alarm System cabling installed exposed shall be provide with a fire resistance rated grommet that maintains the fire resistance rating of the assembly being penetrated, such as those manufactured by Specified Technologies Incorporated (STI). The grommet shall slipover the cabling and snap together to form a round grommet that can slide into the penetration. A separate grommet shall be required for each side of the assembly.

B. Non-Fire Resistance Rated Penetrations:

1. The Non-fire resistance rated penetrations of walls or floor assemblies shall consist of one of the following:

a. Cabling in Conduit: Fire Alarm System cabling installed in conduit shall not require additional sealant between the conduit and the wall or floor penetration

b. Exposed Cabling: Fire Alarm System cabling installed exposed shall be provide with a section of conduit (sleeve) that extends past both faces of the penetration by a minimum distance of 6". Additional Sealant shall not be required.

c. Exposed Cabling: Fire Alarm System cabling installed exposed shall be provide with a Non-fire resistance rated grommet, such as those manufactured by Specified Technologies Incorporated (STI). The grommet shall slipover the cabling and snap together to form a round grommet that can slide into the penetration. A separate grommet shall be required for each side of the assembly.

C. Smoke Barrier/Partition Penetrations:

1. Where Fire Alarm System conduit penetrates a smoke barrier/partition wall or floor assembly, the Fire Alarm System Contractor shall provide a smoke barrier/partition penetration that prevents the passage of smoke through the assembly being penetrated.

2. Smoke barrier/partition penetrations of walls or floor assemblies shall consist of one of the following:

a. Cabling in Conduit: Fire Alarm System cabling installed in conduit shall be provided with sealant between the conduit and the wall or floor penetration

b. Exposed Cabling: Fire Alarm System cabling installed exposed shall be provide with a section of conduit (sleeve) that extends past both faces of the penetration by a minimum distance of 6". Seal both ends of conduit (sleeve) with U.L listed or Factory Mutual Global approved material and sealant that prevents the passage of smoke. Provide sealant between the conduit (sleeve) and the wall or floor assembly on both sides of assembly penetration.

c. Exposed Cabling: Fire Alarm System cabling installed exposed shall be provide with a Non-fire resistance rated grommet, such as those manufactured by Specified Technologies Incorporated (STI). The grommet shall slipover the cabling and snap together to form a round grommet that can slide into the penetration. A separate grommet shall be required for each side of the penetration.

D. All firestop systems shall be installed in accordance with the manufacturer's recommendations and shall be completely installed and available for inspection by the local authorities prior to cabling system acceptance.

E. Refer to Division 07 for requirements on sealing of penetrations.

F. The Fire Alarm System Contractor shall minimize the quantity of penetrations through the air barrier that is located on Sheet _____ of the contract documents. All penetrations shall be filled with a spray type foam insulation or other approved means to maintain the integrity of the air barrier. The ends of seismic brace members that penetrate the air barrier shall also be filled with a spray type foam insulation of other approved means to maintain the integrity of the air barrier.

G. The Fire Alarm System and Electrical drawings do not specifically identify penetrations through walls, floors, platforms, and foundations.

H. The Fire Alarm System Contractor shall review all architectural and structural drawings to determine all penetration locations.

I. All penetration locations through walls, floors, platforms, and foundations shall be coordinated with the General Contractor and all other trades.

J. All penetrations through walls, floors, platforms, and foundations are the responsibility of the Fire Alarm System Contractor.

1.13 CUTTING AND PATCHING

A. Obtain permission from the General Contractor and Owner's Representative prior to cutting. Locate cut locations so they will not weaken structural components the minimum amount necessary.

B. All construction materials damaged or cut into during the installation of the Fire Alarm System shall be repaired or replaced with materials of like kind and quality by skilled labor experienced in that particular building trade.

1.14 SYSTEM/DEVICE INTERFACE CONNECTIONS

A. The following system/device interfaces shall be connected to the Fire Alarm System for auxiliary functions initiated by the Fire Alarm System Control Panel and includes, but is not limited to:

1. Audio/Visual Sound Systems
2. Intercom Systems
3. Public Address Systems
4. Smoke and Fire/Smoke Dampers
5. Duct Smoke Detectors
6. H.V.A.C. Systems
7. Magnetic Door Holders
8. Magnetic Door Releases
9. Fire Rated Coiling Doors
10. Fire Rated Shutters
11. Won Doors
12. Smoke Vents
13. Emergency Generators
14. Cooking Hood Fire Suppression Systems
15. Clean Agent Suppression Systems
16. Pre-Action / Deluge Systems
17. Fire Protection Sprinkler Systems
18. Fire Pumps
19. Elevators

1.15 SITE INSPECTIONS OF EXISTING BUILDINGS OR SITE CONDITIONS PRIOR TO BIDDING

A. The Fire Alarm System Contractor shall examine the structure, building, and existing conditions under which Divisions 28 work is to be installed for conditions detrimental to proper and timely completion of the work before submitting proposals and/or bids for this work.

B. Do not proceed with work until deficiencies encountered in existing installation have been corrected. Report any delay or difficulties encountered in installation of the existing Fire Alarm System which might be unsuitable to connect with work. Failure to report conditions shall constitute acceptance of other work as being fit and proper for the installation of the new Fire Alarm System.

C. Maintain continuity of existing circuits of equipment to remain. Existing circuits of equipment shall remain energized. Circuits which are to remain but were disturbed during demolition shall have circuits, wiring, and power restored back to original condition.

D. No subsequent allowance for time or costs will be considered for any consequence related to failure to examine site conditions.

E. Existing site conditions may not be fully depicted on the contract documents and is the bidding Fire Alarm System Contractor’s responsibility to fully understand the existing conditions of the project.

1.16 CONTRACT DOCUMENTS:

A. The Fire Alarm System contract documents are intended to serve as working drawings for general layout and locations of components. The equipment layout is diagrammatic and unless specifically dimensioned or detailed, does not indicate all fittings, hardware or appurtenances required for a complete operating installation. It is the Fire Alarm System contractor’s responsibility to provide devices that may not be indicated or shown on the contract documents for a fully functional system.

B. Wiring diagrams are not intended to indicate the exact course of raceways or exact location of device. Raceway and device locations are approximately correct and are subject to revision as may be necessary or desirable at the time of installation. Precise location in every case shall be subject to the Engineer's approval.

C. The Fire Alarm System contractor shall be responsible for reviewing all architectural, civil, electrical, mechanical, plumbing, structural, and fire protection drawings. These drawings may contain information related to the design and construction of this project and it is the Fire Alarm System contractor’s responsibility to review the contract documents of all trades and to coordinate the contract documents with the Fire Alarm System "Shop Drawings".

D. Architectural and Electrical drawings take precedence over Fire Alarm drawings.

E. The Fire Alarm System installation shall be developed in accordance with the contract documents, project specifications, and applicable standards. Should a conflict occur between the contract documents and project specifications, the project specifications shall prevail, refer to Division 1.

F. In the case that criteria contained on the contract documents is omitted from the project specifications or the project specifications have criteria that is omitted from the contract documents, the criteria given in one location shall apply as if shown in both the contract documents and in the project specifications (what's in one document applies to both documents). The contract documents and project specifications are complementary and what is called for in either is binding as if called for in both.

G. Fire Alarm System Work shall be as defined in the contract documents and in this specification Section. Any details beyond these limits are meant only to give installation clarity to that portion which is a part of this Contract.

H. Fire Alarm System Drawings for the project have been developed by the Engineer using AutoCAD format. These drawing files will be made available to the Fire Alarm System Contractor for development of "Shop Drawings" and "As-Built" drawings, for a fee of $100.00 per sheet. Full payment to be made prior to release of drawing files.

1.17 SHOP DRAWINGS

A. Prepare detailed working drawings that are not larger than the contract documents for the system layout in accordance with N.F.P.A. #72.

B. All items contained in Section 7.4 "Shop Drawings" of the latest edition of N.F.P.A. #72 adopted by the Authority Having Jurisdiction shall be included on the Fire Alarm System Shop Drawings including, but not limited to the following:

1. Sheet Index.

2. Fire Alarm System Component Legend.

3. Cabling Legend.

4. Alpha-numeric labeled cables based upon the "Cabling Legend" for each cable type and cable run.

5. Electrical Legend listing the electrical devices to be utilized as part of the Fire Alarm System installation.

6. Site Plan.

7. Floor Plans indicating all Fire Alarm System devices.

8. End-Of-Line Resistor(s) where applicable.

9. Device Address shown adjacent to each device.

10. One-Line Riser Diagram.

11. "Sequence of Operations" matrix indicating all system Inputs and Outputs.

12. Mounting details and mounting heights

C. Provide "Shop Drawings" that are usable for trouble-shooting purposes showing equipment/device locations, conduit routing, junction boxes, connection cabling for the entire Fire Alarm System layout, and riser diagrams.

D. Shop Drawings shall be clear and legible with a minimum text height of 1/8” for all text.

E. A graphical scale shall be provided for each floor plan or detail on the shop drawings in accordance with N.F.P.A. #72.

F. Projects that require more than one sheet to show the entire Fire Alarm System shall require a key plan.

G. The key plan shall identify the location of the Fire Alarm System that is contained on that sheet and shall contain a reference north arrow.

H. All sheets that contain a break in the building background shall contain a "Match Line" designation to indicate where the building and Fire Alarm System continues, even if on the same sheet.

I. One-Line Riser Diagram shall show all field devices and their respective room names, room numbers, device address, device designation and candela settings in the order wired on the floor plans. Per NFPA 72, a riser diagram is required to show the type and number of system components/devices on each circuit and the number of conductors for each circuit. Since a circuit is defined in NFPA 72 as a connection path between locations, the riser diagram should show the order that devices are connected.

1.18 PRE-CONSTRUCTION KICK–OFF MEETING

A. The Fire Alarm System Contractor may request a pre-construction kick-off meeting with the Architect, Fire Protection Engineer, General Contractor, Electrical Contractor, Building Owner Representative, and Owners IT Department (if applicable) to answer any specification and contract design related questions during the early design phase of the project.

B. The Fire Alarm System Contractor shall provide a written request for this meeting to the General Contractor that is addressed to the Architect.

C. The pre-construction kick-off meeting shall take place prior to submittal of equipment data sheets.

1.19 BUILDING EXPANSION, SEPARATION, OR SEISMIC JOINTS

A. The Fire Alarm System Contractor shall provide a junction box on each side of the Building Expansion, Separation, or Seismic joint.

B. The Fire Alarm System Contractor shall provide a section of flexible conduit between the junction boxes of sufficient length to accommodate for the calculated building movement.

C. The Fire Alarm System Contractor shall provide grounding bushings with #12 grounding cable to maintain continuity between junction boxes. Grounding cable shall be of sufficient length to accommodate for the calculated building movement.

D. The Fire Alarm System Contractor shall secure flexible conduit and grounding cable on each side of the Building Expansion, Separation, or Seismic joint.

1.20 SUBMITTALS

A. Product substitution during installation from the approved Equipment Submittals will not be allowed and shall result in the removal and re-installation of system components at no additional cost to the Owner.

B. All Substitution Requests shall be submitted on the forms provided in Division 0 or 1 of the General and Supplemental Conditions of the Project Manual.

C. Provide copies as specified by Division 1 and at a minimum provide **six (3) sets** of "Shop Drawings", Back-up Battery Calculations, Voltage Drop Calculations, Graphic Map(s), and Manufacturer's Data Sheets to the Architect/Engineer for approval prior to the purchase, fabrication, or installation of any system component. Failure to receive the Architect/Engineer approval that results in reordering of material, removal of installed system components, and the re-installation of the Fire Alarm System shall not be charged as additional cost to the Owner or General Contractor.

D. Fire Alarm System equipment submittals, shop drawing submittals, back-up battery calculations, voltage drop calculations, and graphic maps shall be submitted together at one time as listed below.

E. Equipment Submittals for the Fire Alarm System shall be submitted to the Architect / Engineer for review and approval within **60 calendar days** from the date of the Contract signing by the General Contractor.

F. All remote power supply locations deemed necessary by the Fire Alarm System Contractor shall be submitted for review and approval.

G. "Shop Drawings", Back-up Battery Calculations, Voltage Drop Calculations, and the Graphic Map(s) for the Fire Alarm System shall be submitted to the Architect / Engineer for review and approval within **60 calendar days** from the date of the Contract signing by the General Contractor.

H. Graphic Maps shall be submitted for review and approval within **60 calendar days** from the date of the Contract signing by the General Contractor.

I. Copies of the Preliminary Sound Testing Results for the Fire Alarm System shall be submitted to the Architect / Engineer for review and approval within **14 calendar days** from the date that the preliminary sound testing was performed and shall be approved by the Architect / Engineer prior to final system acceptance testing with the Authority Having Jurisdiction.

J. Equipment submittals shall be broken up by "Tabbed Dividers" that shall include, at a minimum, the following:

1. Fire Alarm System Control Panel.
2. Fire Alarm Remote Annunciator Panels.
3. Power Supplies.
4. Initiating Devices.
5. Notification Appliances.
6. Graphic Maps.
7. Modules.
8. Miscellaneous Equipment.

K. Equipment submittals shall include, at a minimum, the following:

1. Fire Alarm System Control Panel.
2. Fire Alarm System Control Panel Enclosures.
3. Fire Alarm System Terminal Cabinets
4. Fire Alarm Remote Annunciator Panels.
5. Main Fire Alarm System Control Panel Power Supplies.
6. Remote Power Supplies.
7. Back-Up Batteries.
8. Internal Battery Chargers.
9. External Battery Chargers.

10. Initiation Devices:

    a. Manual Pull Stations.

    b. Manual Pull Station Stoppers (Shields).

    c. Heat Detectors.

    d. Linear Heat Detector Cables.

    e. Smoke Detectors.

    f. Duct Smoke Detectors.

    g. Duct Smoke Detector Remote Test Stations.

    h. Beam Smoke Detectors.

    i. Carbon Monoxide Only Detectors.

    j. Combination Smoke / Carbon Monoxide Detectors.

    k. Multi-Criteria Detectors.

11. Notification Appliances:

    a. Sounder Base Only Appliances.

    b. Low Frequency Sounder Base Only

    c. Low Frequency Sounder Only Appliances.

    d. Strobe only Appliances.

    e. Horn only Appliances.

    f. Mini-Horn Only Appliances.

    g. Combination Horn / Strobe Appliances.

    h. Combination Low Frequency Sounder / Strobe Appliances.

12. Damage Stoppers (Wire Guards).

13. Anti-Ligature Guards

14. Graphic Maps.

15. Monitor Modules.

16. Relay Modules.

17. Multi-Voltage Relay Modules (Relay in Box).

18. Control Modules.

19. Zone Interface modules.

20. Isolation Modules.

21. Remote Indicating Lamps.

22. Magnetic Door Holders.

23. Magnetic Door Locks.

24. Room Temperature Sensor.

25. Printer.

26. Network Node.

27. Integration Network.

28. Universal Digital Alarm Communicator Transmitter (UDACT).

29. Radio Transmitter.

30. AES Wireless Transceiver.

31. Antenna.

32. Transient Voltage Surge Protection.

33. Wiremold Surface Raceway.

34. Wet Rated Cables.

L. Shop drawing submittals shall include the following information:

1. Floor plans identifying all Fire Alarm System components and devices.

2. Cabling / conduit routing and sizing.

3. Sequence of operations

4. Fire Alarm System zoning.

5. Point to point cabling diagrams.

6. One-line risers.

7. Back-up Battery Calculations.

8. Voltage Drop Calculations.

9. Graphic Map Details / Artwork

M. Equipment Submittals, Back-Up Battery Calculations, Voltage Drop Calculations, and full-sized color bond Graphic Maps for the Fire Alarm System shall be contained within a single 3-ring hard cover binder having a typewritten index and divider sheets between categories with identifying tabs.

N. Equipment Submittals shall contain original brochures supplied by manufacturers (Photocopies of originals will not be accepted). Each type of device provided shall be identified in the Equipment Submittals using the same identification as shown on the drawings and specifications. The information included must be the exact equipment to be installed, not the complete "line" of the manufacturer. Where sheets show the equipment installed and other equipment, the installed equipment shall be neatly and clearly identified on such sheets.

O. If the submittals are being delivered electronically, the Fire Alarm System Contractor shall provide the following:

1. Submittal Drawings:

a. The Submittal Drawings shall be a single PDF that is formatted to actual size (not 11x17) and collated in numerical order as designated in the title block of each drawing.

2. Equipment Submittals:

a. The Equipment Submittal shall be a single PDF.

b. The Equipment Submittal PDF shall contain all equipment, devices, and components that are collated for printing on 8½"x11" sized paper.

c. The Equipment Submittal PDF shall be a searchable document.

d. The Equipment Submittal PDF shall be formatted for duplex printing with blank sheet inserted where necessary.

e. The Equipment Submittal PDF shall contain a "Table of Contents" that indicates all pieces of equipment, devices, and components contained within each "Tabbed Divider" defined in Paragraph 1.13.G of this Specification Section.

f. The Equipment Submittal PDF shall be bookmarked by "Tabbed Divider" and for each piece of equipment, device, and component.

3. Back-Up Battery Calculations and Voltage Drop Calculations that are submitted as part of the Equipment Submittal PDF shall be formatted to the following:

   a. Calculations shall be included at the end of the Equipment Submittal PDF under a separate "Tabbed Divider" for both Back-Up Battery Calculations and the Voltage Drop Calculations.

   b. The Equipment Submittal "Table of Contents" shall also indicate all calculations being provided for both the Back-Up Battery and the Voltage Drop Calculations

4. Back-Up Battery Calculations and Voltage Drop Calculations that are submitted as a separate PDF from the Equipment Submittal PDF:

   a. The single Back-Up Battery Calculations and Voltage Drop Calculations submittal PDF shall contain all calculations that are collated for printing on 8½"x11" sized paper.

   b. The Back-Up Battery Calculations and Voltage Drop Calculations submittal PDF shall be a searchable document.

   c. The Back-Up Battery Calculations and Voltage Drop Calculations submittal PDF shall be formatted for duplex printing with blank sheet inserted where necessary.

   d. The Back-Up Battery Calculations and Voltage Drop Calculations submittal PDF shall contain a "Tabbed Divider" to separate the Back-Up Battery Calculations from the Voltage Drop Calculations.

   e. The Back-Up Battery Calculations and Voltage Drop Calculations submittal PDF shall contain a "Table of Contents" that indicates all calculations contained within each "Tabbed Divider" defined in Paragraph 1.13.L.3.d of this Specification Section.

   f. The Back-Up Battery Calculations and Voltage Drop Calculations submittal PDF shall be bookmarked by "Tabbed Divider" and for each Back-Up Battery Calculation or Voltage Drop Calculation.

5. Graphic Maps:

   a. Graphic Maps shall be submitted in a PDF that is full sized to allow printing of actual sized proposed Graphic Maps.

P. Review of Fire Alarm System submittal by the Engineer or Architect does not relieve the Contractor of responsibility for compliance with the intent of all contract documents and / or code.

Q. Any material found to be installed without prior approval will be required to be removed and replaced with only specified approved material at Contractor's cost.

R. The contract documents shall not be used as the Fire Alarm System Contractor's Shop Drawings.

S. The Fire Alarm System Shop Drawings shall be system specific with only Fire Alarm System equipment and connections to other equipment that will be interfaced to the Fire Alarm System being shown.

T. All re-submittals shall have the areas of revision clearly marked with revision clouds.

U. The Fire Alarm System Contractor shall resubmit within **14 calendar days** upon receiving a review letter rejecting any portion of the Fire Alarm System submittal.

1.21 CERTIFICATION AND LICENSING

A. The Fire Alarm System shall:

1. Be manufactured by an ISO 9001 certified company.

2. Meet the requirements of BS EN9001: ANSI/ASQC Q9001-1994.

3. Shall bear the marking for a U.L. Listed UOJZ control unit.

B. The Fire Alarm System Contractor shall:

1. Be currently listed and approved by Underwriters Laboratories Incorporated with a Certificate Service for Protective Signaling Services – Local, Auxiliary, Remote Station.

2. Be currently listed and approved by Underwriters Laboratories Incorporated for "Proprietary Protective Signal System Listing Program" with a UUJS certificate of compliance.

3. Be a certified Level III technician by National Institute for Certification in Engineering Technologies (NICET) in the Fire Alarm Technology subfield of fire protection engineering technology.

C. At the request of the Architect/Engineer, the Fire Alarm System Contractor shall provide:

1. UL certificate specific to this installation.

2. Proof of all Certificates and Listings

D. Fire Alarm System Shop Drawings shall be designed by one of the following (provide a copy of documentation):

1. NICET Level III Certified Designer

2. Registered Professional Fire Protection Engineer.

E. The Installing Fire Alarm System Contractor shall employ a minimum of NICET Level II technicians to:

1. Provide and/or perform on site installation assistance throughout the duration of the project, up to and including acceptance of the Fire Alarm System by the Authority Having Jurisdiction.

2. Oversee the final check-out and to ensure systems integrity.

3. Trim and program the Fire Alarm System Control Panel.

F. Certificates issues by any company not directly associated with the installation of this project will be rejected

G. The installing Contractor shall have a minimum of fifteen (15) years' experience in the design, installation, servicing, and testing of the Fire Alarm System to be installed. A list of installations of a similar nature and scope shall be provided on request.

1.22 COMPETITIVE PRODUCTS

A. Any reference in the specifications to any article, device, product, material, fixture, form or type of construction by name, make or catalog number shall be interpreted as establishing a standard of quality and shall not be construed as limiting competition.

B. The Fire Alarm System Contractor, in such cases, may at his option use any article, device, product, material, fixture, form or type of construction which in the judgment of the Engineer, expressed in writing, is equal to that specified.

1.23 REQUESTS FOR INFORMATION (RFI)

A. It is our intent to provide a timely response to any Request for Information (RFI) regarding the Fire Alarm System work. To further expedite this process, if a suggestion can be determined or derived at by the initiator of the Request for Information (RFI), this suggestion shall be supplied with the submitted Request for Information (RFI). If no suggestion is given where one is possible, the RFI will be returned as incomplete.

B. All Fire Alarm System Request for Information (RFI) questions shall be written on the forms provided in Division 0 or 1 of the General and Supplemental Conditions of the Project Manual.

1.24 SCHEDULE OF VALUES

A. Provide schedule of values per Division 1 and related project requirements:

B. Provide a "Schedule of Values" that shall be broken down in accordance with the following subsection. Further breakdown into subcategories is at the option of the Contractor, except as noted below:

1. Engineering

2. Coordination Meetings

3. Materials and Labor

4. System Testing

5. Closeout Materials

C. Engineering:

1. The dollar value for "Engineering" work associated with Fire Alarm System shall in no case be less than 17.00% of the total dollar value of the Fire Alarm System work or as indicated in Division 1, whichever is higher. "Engineering" work shall be a lump sum line item consisting of the following at a minimum:

a. Shop Drawings

b. Battery Back-Up Calculations

c. Voltage Drop Calculations

d. Equipment Submittals

e. Permitting

f. Architect and/or Engineer Approval

2. The Contractor is advised there will be no payments for "Engineering" until the submittal materials (Shop Drawings, Battery Back-up Calculations, Voltage Drop Calculations, and Equipment Submittals) have been reviewed and approved by the Architect and/or Engineer.

D. Coordination Meetings:

1. Provide a separate line item in the "Schedule of Values" for coordination meetings.

2. The dollar value for "Coordination Meetings" shall be not less than 3.00% of the total dollar value of the Fire Alarm System work.

3. The Contractor is advised there will be no payments for "Coordination Meetings" until documentation taken at the review meetings are received by the Architect and/or Engineer.

E. Materials and Labor:

1. Provide a separate line item in the "Schedule of Values" for "Materials and Labor" associated with the Fire Alarm System.

2. The Fire Alarm System shall be broken down into separate line items for installation work in the "Schedule of Values" consisting of the following at a minimum.

   a. Each building shall have a line item.

   b. Each wing of a building shall have a line item.

   c. Each floor of a building shall have a line item.

   d. Each "Phased Area" of the project, or area defined on the Architectural documents shall have a line item.

3. The dollar value for "Materials and Labor" shall be the remaining percentages of the total dollar value of all Fire Alarm System work.

F. System Testing:

1. Provide a separate line item in the "Schedule of Values" for "System Testing" associated with the Fire Alarm System.

2. The Fire Alarm System shall be broken down into separate line items for the following:

   a. Preliminary audibility testing (Decibel Readings).

   b. Preliminary intelligibility testing (CIS readings).

   c. Final Audibility and Intelligibility testing (Authority Having Jurisdiction).

   d. Preliminary system functionality testing.

   e. Final system functionality testing.

3. The dollar value for "System Testing" shall be not less than 20.00% of the total dollar value of the Fire Alarm System work.

G. Closeout Materials:

1. Provide a separate line item in the "Schedule of Values" for each "Closeout Material" consisting of the following at a minimum.

   a. Punch List

b. Sound testing results

c. Audibility and Intelligibility Testing Results

d. Warranty Letters

e. Signed Test Certificates

f. "As-Built" Drawings

g. Operations and Maintenance Manuals

h. Owner Training

i. Testing Procedures and Frequency

j. Electronic Copy of the Program Software

2. The dollar value for "Closeout Materials" shall be not less than 3.00% of the total dollar value of the Fire Alarm System work or as indicated in Division 1, whichever is higher.

H. The Contractor is advised that in addition to payments held out for retainage and project closeout materials, the Owner reserves the right to withhold 5% of the funds for any of the above categories until the systems have been proven to operate as specified and have been completely tested and approved.

1.25 QUALITY ASSURANCE

A. All devices, components, and equipment of the Fire Alarm system shall be listed as a product of a single Fire Alarm system manufacturer under the appropriate category by Underwriters' Laboratories, Inc. (UL), shall bear the UL label, and shall be listed under UL category UOJZ as a single control unit.

B. Partial or pending listings for a Fire Alarm system or components is not acceptable.

C. The Fire Alarm system installation shall comply with Article 760 of N.F.P.A. #70 with all circuits being marked in accordance with Article 760-30, 760-176, and 760-179.

D. Requirements of Regulatory Agencies:

1. Perform work in accordance with applicable Codes.

2. In case of differences between building codes, state laws, local ordinances, utility company regulations, and Contract Documents, the most stringent shall govern.

1.26 OPERATIONS AND MAINTENANCE MANUAL

A. Bind Operation & Maintenance Manual for the Fire Alarm System in a single three-ring tabbed hard-backed binder with clear plastic pocket on spine. Spine of each binder shall have following typewritten lettering inserted:

OPERATION
AND
MAINTENANCE
MANUAL
FIRE ALARM SYSTEM

B. The Operations and Maintenance Manuals shall include a complete materials list of the Fire Alarm system including the addresses and phone numbers of local sources of replacement parts.

C. Operation and Maintenance manuals shall contain the following:

1. "As-Built" Shop drawings.

2. Cabling diagrams.

3. Operation and Maintenance instructions.

4. Replacement parts lists.

5. Manufacturer’s equipment submittal literature for all components.

6. Typewritten "Sequence of Operations".

7. Thorough testing procedures.

8. Recommended testing frequency for each item.

9. Acceptance Test certificates.

D. Operation and Maintenance Binders:

1. Binders shall be commercial quality, 8-1/2 x 11-inch (3) D-ring binders

2. Binders shall have durable plastic covers with clear pockets on the cover and spine to hold labels.

3. Binders shall have a 1" minimum and 3" maximum ring size.

4. Binders shall not be filled more than 2/3 of its capacity to accommodate future revisions.

5. Where two or more binders are necessary to accommodate data, correlate data in each binder into related groupings according to the project manual table of contents. Cross reference other binders where necessary to provide essential information for proper operations and maintenance of each piece of equipment.

E. Operation and Maintenance manuals shall contain the following:

1. Cover: Identify each binder with a typed or printed title.

2. Project Directory: Name, address, and phone number of Architect, General Contractor, and Electrical Subcontractors. Also include complete list of equipment installed with name, address, and phone number of each vendor.

3. Table of Contents: List every item separated by a divider, using the same identification as on the divider tab.

4. Dividers: Provide heavy paper dividers with printed tabs for each section. Immediately following the divider tab include a description of product.

5. Typewritten Operation and Maintenance instructions.

6. Complete replacement parts list with part numbers.

7. Manufacturer’s equipment submittal literature for all components used in the system.

8. Typewritten "Sequence of Operations".

9. Thorough testing procedures.

10. Recommended testing frequency for each item.

11. Acceptance Test Certificates.

12. Copy of "As-Built" drawings.

    a. Where oversized drawings are necessary, fold drawings to the same size as text pages and use as foldout.

b. If drawings are too large to be used practically as a foldout, place the drawing neatly folded in the front or rear pocket of the binder. Insert a typewritten page indicating drawing title, description of contents and drawing location in the appropriate location in the manual.

13. Warranties: Provide a copy of each warranty in the appropriate manual. Provide written data outlining the procedures to follow in the event of product failure.

14. Electronic copy of the final system program software. (USB Drive / CD)

F. Submit copies as specified by Division 1, and at a minimum, provide **three (3) copies** of Operation & Maintenance Manual to Architect and Engineer to review prior to scheduling the training session.

G. Operation and Maintenance manuals shall contain original color printed brochures supplied by manufacturers (Photocopies originals will not be accepted).

H. First section of the Operations and Maintenance Manual shall consist of name, address, and phone number of Architect, General Contractor, and Electrical Subcontractors. Also include complete list of equipment installed with name, address, and phone number of each vendor.

I. The information included must be the exact equipment installed not the complete "line" of the manufacturer. Where sheets show the equipment installed and other equipment, the installed equipment shall be neatly and clearly identified on such sheets.

J. Cabling Diagrams for each system shall be complete for the specific system installed under the Contract with typical "Cabling Diagrams" not being acceptable.

1.27 TRAINING MANUAL

A. The Training Manual shall contain a Syllabus titled "Section 28 3100 Fire Alarm System – Training Syllabus".

B. Prior to starting the training session, provide a quantity of up to ten (10) Training Manuals to the Owners staff.

C. Each Training Manual shall be in its own 3-ring hard covered binder that shall be sized to allow for 20% additional documentation.

D. The spine and front cover of each Training Manual shall have a clear cover with a typed insert with the following information:

1. Labeled "Section 28 3100 Fire Alarm System – (**Project Name Here**) Training Manual".

2. Site Name.

3. Site Address.

4. Project Name.

5. Project address.

6. Current Date.

7. Installing Fire Alarm System Contractor.

8. Installing Fire Alarm System Contractor's Address.

9. Installing Fire Alarm System Contractor's Contact Name.

10. Installing Fire Alarm System Contractor's Phone Number.

E. Each Training Manual shall include the following;

1. Use color coded numbered tabs to separate each item defined below and for each device that was installed.

2. Provide a "Table of Contents" as the first page indicating each piece of equipment or device document.

3. "Section 28 3100 Fire Alarm System – (site name here) Training Syllabus".

4. Provide color copies of a power point presentation consisting of two slides per page that demonstrates typical functions and operational instructions of the new Fire Alarm System that shall consist of, but not limited to the following:

   a. Step-by-step instructions of the most common features.

   b. How to acknowledge and silence an "Alarm" condition.

   c. How to acknowledge and silence a "Trouble" condition.

   d. How to acknowledge and silence a "Supervisory" condition.

   e. How to operate the "Drill" feature.

f. What to do when there is a "Dirty Detector" alert.

g. What to do when there is a loss of dialer communication alert.

h. How and when the Owners Maintenance Staff should call for help.

i. Include the Manufacturer's Software User's Manual.

1.28 WARRANTY LETTER

A. The Fire Alarm System contractor shall warranty the Fire Alarm System against defects in materials and workmanship for a period of 1 year from date of approved acceptance testing.

B. Provide a "Certificate of Warranty" letter at the completion of the project. The date of "Substantial Completion" shall be clearly shown on the letter indicating when the warranty period begins.

C. The "Certificate of Warranty" letter shall be signed by the Fire Alarm System contractor.

D. The "Certificate of Warranty" shall be included as part of the Operation and Maintenance Manual. The date of "Substantial Completion" shall be the date indicated on the approved test certificate that was signed by the Authority Having Jurisdiction for system acceptance.

E. The full cost of maintenance, labor, and materials required to correct any defect during this one-year period shall be included in the submittal bid.

1.29 TEST CERTIFICATES

A. Completely fill out the Fire Alarm System "Record of Completion" documents contained within the latest adopted Edition N.F.P.A. #72 and provided to the Owner at completion of this project.

B. Obtain the Authority Having Jurisdiction signature, printed name, date, and telephone number on the "Record of Completion" documents.

C. Upon completion of the Fire Alarm System installation, testing, and Instruction & Training, the Installing Vendor shall provide the following Signed Test Forms:

1. The signed original "Record of Completion".

2. The signed original Fire Alarm System Permit.

1.30 PREVENTATIVE MAINTENANCE AGREEMENT

A. Prior to completion of the Fire Alarm system installation, the Fire Alarm System Contractor shall provide a preventative maintenance agreement, which shall at the Owners option, become effective at the end of the 12-month warranty period.

1.31 OFF SITE MONITORING SERVICE AGREEMENT

A. Prior to completion of the project, the Fire Alarm System Contractor shall provide to the Owner, an agreement for the purpose of providing off-site monitoring services. The contractor shall provide central station monitoring, as part of a complete fully functional system, for the one-year warranty period, at which time the owner can reevaluate this service.

1.32 AS-BUILT DRAWINGS

A. The Fire Alarm System Contractor shall maintain, in addition to any reference drawings, an "As-Built" set of drawings, which have been reproduced from the approved site set on which all deviations from the original design shall be drafted in a neat legible manner with red colored pencil.

B. "As-Built" drawings shall clearly indicate the following:

1. Actual routing of all raceways.
2. Actual cable type, numbers, and routing.
3. System cabling diagrams.
4. Connection diagrams.
5. Interface of all components in the system.
6. Equipment and device locations.
7. Final room names and numbers.
8. Programming addresses assigned for all components.

C. The room numbering system depicted in all graphics and referenced in data bases generated by the Fire Alarm System Contractor shall match that of the final signage and room identification system adopted by the Owner, unless specifically approved otherwise in writing by the Owner.

D. The "As-Built" drawings shall show actual installation from all addenda items, change orders, field authorizations, design changes, installation modifications, etc.

E. The Fire Alarm System Contractor shall update all references to specific products to indicate products actually installed on project.

F. Upon completion of work, the Fire Alarm System Contractor shall deliver the red lined drawings and one set of neatly drafted "As-Built" drawings on electronic media in AutoCAD format to the Architect for the Engineer to review and accept prior to being forwarded to the Owner for their records.

1.33 PROGRAM SOFTWARE

A. Following the completion of final system programming, the Fire Alarm System Contractor shall provide to the Owner an electronic copy of the final system program software and "Point Status Report".

B. A hard copy of the "System Report" which documents the status of all active devices in the system shall also be provided.

C. The software program shall be compatible with an IBM PC and provided with a verification software package.

D. A report shall be generated of the test results and two hard copies submitted to the Architect / Engineer for review.

E. Provide no less than (1) software upgrade and (1) firmware upgrade at the end of the 1-year warranty period.

1.34 SPARE PARTS

A. The Fire Alarm system contractor shall include in this "Scope of Work" the following list of material as "Spare Parts":

	QTY	Item
1.	____	Manual Pull Stations
2.	____	Manual Pull Station Stoppers
3.	____	Heat Detectors
4.	____	Linear Heat Detector Cables
5.	____	Photoelectric Smoke Detectors
6.	____	Ionization Smoke Detectors
7.	____	Smoke Detector Bases
8.	____	Duct Smoke Detector with Detector Heads
9.	____	Beam Detectors
10.	____	Carbon Monoxide Only Detectors
11.	____	Combination Smoke / Carbon Monoxide Detectors
12.	____	Sounder Base Only Devices
13.	_____	Low Frequency Sounder Base Only

14. ____ Low Frequency Sounders Only

15. ____ Strobes Only Appliances

16. ____ Horns Only Appliances

17. ____ Mini-Horn Only Appliances

18. ____ Combination Horn / Strobe Appliances

19. ____ Combination Low Frequency Sounder / Strobe Appliances

20. ____ Monitor Modules

21. ____ Relay Modules

22. ____ Multi-Voltage Relay Modules (Relay in Box)

23. ____ Control Modules

24. ____ Zone Interface Modules

25. ____ Isolation Modules

26. ____ Remote Indicating Lamps

27. ____ Device Boxes

28. ____ 4S J-boxes with blank covers

B. All Spare Parts shall be the same components as those components installed in the system.

C. Provide signed proof of delivery to the Owner with close out documentation.

1.35 CLOSEOUT MATERIAL

A. The Fire Alarm System close out material shall be submitted to the Architect / Engineer for review and approval prior to being provided to the Owner.

B. All close out materials shall be contained within a single 3-ring hard cover binder.

C. The close out materials shall include the following at a minimum:

1. Operations and Maintenance Manuals: See Paragraph 1.29 of this Specification Section for "Operations and Maintenance Manual" requirements.

2. Training Manuals: See Paragraph 1.30 of this Specification Section for "Training Manual" requirements.

3. Warranty Letters: See Paragraph 1.31 of this Specification Section for "Warranty Letter" requirements.

4. Test Certificates: See Paragraph 1.32 of this Specification Section for "Test Certificate" requirements.

5. Preventative Maintenance Agreement: See Paragraph 1.33 of this Specification Section for "Preventative Maintenance Agreement" requirements.

6. Off-Site Monitoring Services Agreement: See Paragraph 1.34 of this Specification Section for "Off-Site Monitoring Service Agreement" requirements.

7. "As-Built" Drawings: See Paragraph 1.35 of this Specification Section for "As-Built" Drawing requirements.

8. Program Software: See Paragraph 1.36 of this Specification Section for "Program Software" requirements.

9. Spare Parts: See Paragraph 1.37 of this Specification Section for "Spare Parts" requirements.

1.36 SERVICE

A. All Fire Alarm System equipment shall be of a single supplier and installed by an authorized factory distributor, having a local office located within 50 miles of the project site that is staffed with trained full-time employees who are capable of performing testing, inspections, repair, maintenance, and has the ability to provide prompt emergency services.

B. For non-emergency service, response time of the technician to the site shall not exceed 4 hours.

C. Service calls received before 1:00 P.M. shall be provided that day and service calls received after 1:00 P.M. shall be the following business day.

D. For emergency service, response time of the technician to the site shall not exceed 2 hours in accordance with NFPA 72 Section 26.3.8.

1.37 BATTERY BACK-UP CALCULATIONS

A. Battery Back-Up power shall be an integral part of the Fire Alarm System and shall automatically switch over upon the loss of AC power.

B. It shall be the Fire Alarm System Contractor’s responsibility to confirm that the proposed Fire Alarm system will meet or exceed the local Authority Having Jurisdiction (AHJ) requirements for Battery Back-Up power.

C. At a minimum, provide battery Back Up power for the entire Fire Alarm system to provide 24 hours of standby operation immediately followed by a minimum of 5 minutes of alarm operation.

D. Battery Back-up Calculations for each Control Panel and/or Power Supply shall indicate the following:

1. "Standby" or Non-Active Mode: "Amp Draw" for each device, quantity of each device, and total "Amp Draw" load for each circuit of the Fire Alarm System Control Panel and/or Power Supply.

2. "Alarm" or Active Mode: Individual "Amp Draw" of each device, quantity of each device, and total "Amp Draw" load in with all devices operating at the maximum load condition for each Control Panel and/or Power Supply.

3. Total "Amp Draw" load required by each Control Panel and/or Power Supply for verifying selection of back-up batteries.

E. For systems that include an Uninterruptible Power Supply (UPS), provide the maximum load allowed by the UPS manufacturer and list each item along with its maximum load that will be connected to the UPS.

1.38 VOLTAGE DROP CALCULATIONS

A. Provide the Voltage Drop Calculations for each Fire Alarm System Control Panel and/or Power Supply circuit.

B. Voltage Drop Calculations for each Fire Alarm System Control Panel and/or Power Supply circuit shall indicate the following:

1. All devices on each circuit.

2. Quantity of each device on each circuit.

3. Cable length of each circuit.

4. Gauge of cabling for each circuit.

5. Total line loss for each circuit.

6. Factor the line loss and "Amp Draw" to show the actual voltage available at the end of each circuit (after the last device).

1.39 SPARE CAPACITY

A. Spare capacity shall be incorporated into the Fire Alarm System design to support future expansion or renovations.

B. The minimum spare capacities shall be provided for the following circuits:

1. 25% for each Signaling Line Circuit (SLC).

2. 25% for each Initiating Device Circuit (IDC).

3. 25% for each Notification Appliance Circuit.

C. Batteries shall be provided with at least 25% spare capacity.

D. Conduit and wiremold fill shall not exceed 40% of the interior cross-sectional area.

PART 2 - PRODUCTS

2.01 DOMESTIC PRODUCTS

A. All Fire Alarm system components and devices shall be domestically made.

B. Products shall comply with the requirements of the "Buy American Act - Construction Materials under Trade Agreements", current adopted edition for components and devices on this project.

2.02 FIRE ALARM SYSTEM CONTROL PANEL

A. The Fire Alarm System Control Panel:

1. The Fire Alarm System Control Panel shall meet the modular listing requirements of the ninth edition of UL Standard 864 "Standard for Control Units and Accessories for Fire Alarm Systems" for ease of installation, maintenance, and future expansion.

2. Each subassembly of the Fire Alarm System Control Panel shall include the appropriate UL modular label. This includes all printed circuit board assemblies, power supplies, and enclosure parts.

3. The Fire Alarm System Control Panel shall be capable of both "Class A" and Class "B" circuits.

4. The system shall recognize specific device type ID's and associate that ID with the corresponding address of the device.

5. The Fire Alarm System Control Panel shall be capable of supporting the following items at a minimum:

   a. Up to (8) Fire Alarm Remote Annunciator Panels.

6. Provide new Circuit Labels and Directory cards for panels modified and / or added.

7. The Fire Alarm System Control Panel shall have a minimum 6-amp power supply and be capable of expansion to a maximum of 54 total amps via bus connected expander modules that supervise low battery, loss off AC, and loss of communication.

8. The Fire Alarm System Control Panel shall be capable of being programmed, configured, edited, and expanded onsite without requiring special equipment or the use of any external programming equipment.

9. The system programming shall be "Backed Up" via an upload/download program.

10. Audible and visual annunciation of any "Alarm", "Trouble", or "Supervisory" condition at the Fire Alarm System Control Panel, at the Fire Alarm System Remote Annunciator Panel(s), and at the operator's terminals,

11. Provide with a built-in universal communicator.

12. The Fire Alarm System Control Panel shall provide the following features:

    a. Supervision of all initiating and notification circuits throughout the facility by way of connection to addressable control, monitor, and relay modules.

    b. Detect the activation of any initiating device and the location of the alarm condition.

    c. Operate all notification appliances and auxiliary devices as programmed.

    d. PAS pre-signal, meeting N.F.P.A. #72 requirements.

    e. Rapid manual station reporting (under 3 seconds).

    f. Coding panel node notification circuits in March Time (120 PPM), Temporal (N.F.P.A. #72), and California Code

    g. Periodic detector test (conducted automatically by the software).

    h. Shall support Two-Stage operation, Canadian Dual Stage (3 minutes) and Canadian Dual Stage (5 minutes).

        1) Two stage operation shall allow 20 Pulses per Minute (PPM) on alarm and 120 Pulses per Minute (PPM) after 5 minutes or when a second device activates.

        2) Canadian Dual stage operation is the same as Two-Stage except will only switch to second stage by activation of Drill Switch 3 or 5-minute timer.

i. Self-optimizing pre-alarm for advanced fire warning, which allows each detector to learn its particular environment and set its pre-alarm level to just above normal peaks.

j. Cross zoning with the capability of counting two detectors in "Alarm", two software zones in "Alarm", or one smoke detector and one heat detector in "Alarm".

k. Coding option that will synchronize specific strobe lights designed to accept a specific "Sync Pulse".

l. Control-by-time for non-fire operations (with holiday schedules).

m. Day/night automatic adjustment of detector sensitivity.

n. Device "Blink Control" to turn off detector / module Light Emitting Diodes (LEDs) for special areas such as sleeping areas.

13. Install Synchronization modules and/or equipment to meet all code requirements that are powered from a Notification Appliance Circuit (NAC) for the following appliances:

a. Visual Notification Appliances (strobes)

b. Audible Notification Appliances (horns)

c. Multiple Low Frequency Sounder Appliances and/or standard Sounder Appliances installed within a single dwelling unit.

14. The Signaling Line Circuit (SLC) interface board shall be able to drive a "Class B" twisted unshielded circuit up to 12,500 feet in length.

B. The Central Processing Unit (CPU):

1. The Fire Alarm System Control Panel shall contain a microprocessor based Central Processing Unit (CPU) that shall communicate with, monitor, and control all external interfaces and annunciate A "Trouble" condition for a loss in communications for the following at a minimum:

a. Intelligent Addressable Smoke Detectors.

b. Intelligent Addressable Thermal (Heat) Detectors.

c. Addressable Modules.

d. Control Circuits.

e. Notification Appliance Circuits.

f. Local and Remote Operator Terminals.

g. Transponders.

h. Annunciators.

i. Other System Controlled Devices.

j. Peripheral Equipment.

k. Printers.

2. It shall include an EPROM for system program storage, flash memory for building specific program storage, and a "watch dog" timer circuit to detect and report microprocessor failure.

3. Upon a loss of response from a device, the Central Processing Unit shall:

   a. Sound an audible trouble

   b. Illuminate a Light Emitting Diode (LED) indicating loss of communications.

   c. Indicate which device or devices are not responding

   d. Print the information in the history buffer and on the printer.

4. The Central Processing Unit shall contain and execute all control-by-event programs for specific action to be taken if an "Alarm" condition is detected by the system that shall be held in non-volatile programmable memory and shall not be lost with system primary and secondary power failure.

5. A special program check function shall be provided to detect common operator errors.

6. An auto-program (self-learn) function shall be provided to quickly install initial functions and make the system operational.

7. The Central Processing Unit shall provide a real-time clock for time annotation of system displays, events, and history files that shall not be lost if system primary and secondary power supplies fail.

8. The Central Processing Unit’s real time clock may also be used to control non-fire functions at programmed time-of-day, day-of-week, and day-of-year.

9. The Central Processing Unit and associated equipment shall be protected from voltage surges or line transients.

10. Data transmissions between the Central Processing Unit and each peripheral device shall be continuously scanned for proper operation, reliable, and error free. The transmission scheme used shall employ dual transmission or other equivalent error checking techniques.

11. The Central Processing Unit shall provide double pole relays for the following items:

    a. FIRE ALARM

    b. SYSTEM TROUBLE

    c. SUPERVISORY

    d. WATERFLOW

12. The Central Processing Unit shall provide one high-speed serial connection for support of network communication modules.

13. In the event of Central Processing Unit failure, all Signaling Line Circuits (SLC's) loop modules shall fallback to degrade mode.

    a. Degrade mode shall treat the corresponding Signaling Line Circuits (SLC's) loop control modules and associated detection devices as conventional two-wire operation.

    b. Activation of any initiating device in this mode shall automatically activate associated Notification Appliance Circuits.

C. The Fire Alarm System Control Panel System Display Interface Assembly:

1. The Fire Alarm System Control Panel shall include a full featured System Display Interface Assembly that shall include the following

    a. A backlit 80-character Liquid Crystal Display (LCD)

    b. Individual, color coded system status LEDs

    c. Display custom alphanumeric labels.

    d. Label information shall be stored in programmable nonvolatile memory (NVRAM).

    e. May be used to program all system operational parameters.

    f. Display battery charging current and voltage.

2. It shall also provide 10 Light Emitting Diodes (LEDs), which will indicate the status of the following system parameters:

   a. AC POWER: Green LED

   b. SYSTEM ALARM: Red LED

   c. SYSTEM TROUBLE: Yellow LED

   d. SIGNAL SILENCE: Yellow LED

   e. CPU FAILURE: Yellow LED

   f. SUPERVISORY: Yellow LED

   g. OTHER EVENT: Yellow Light Emitting Diode (LED)

3. Two different password levels will be accessible through the System Display Interface Assembly to prevent unauthorized system control or programming.

   a. Level 1 (User): Shall be used for status level changes such as point/zone disable or manual on/off commands (Building Manager).

   b. Level 2 (Master): Shall be used for actual change of the life safety program (installer) and allow access to password change screens.

   c. These passwords shall be five (5) digits at a minimum. Upon entry of an invalid password for the third time within a one-minute time period an encrypted number shall be displayed. This number can be used as a reference for determining a forgotten password.

4. The System Display shall include the following operator control switches:

   a. SIGNAL SILENCE

   b. LAMP TEST

   c. RESET

   d. ALARM ACTIVE (DRILL SWITCH)

   e. ACKNOWLEDGE

5. Depression of the Scroll Display key shall display the next event in the selected queue allowing the operator to view events by type including:

   a. AC POWER

b. FIRE ALARM

c. PRE-ALARM WARNING

d. SUPERVISORY SIGNAL

e. TROUBLE

f. DISABLED POINTS

g. ALARM SILENCED

h. CONTROLS ACTIVE

i. PRE-DISCHARGE

j. DISCHARGE

k. ABORT

6. A "PRINT SCREEN" button shall be provided for printing the event currently displayed on the 640-character Liquid Crystal Display (LCD).

D. System Reports:

1. The Fire Alarm System shall provide means to obtain a variety of reports listing all:

a. Events

b. "Alarm" Conditions

c. "Trouble" Conditions

d. "Supervisory" Conditions

2. Additional reports shall be available for the following:

a. Last Walk Test performed

b. Detector maintenance report containing the status of each installed addressable detector

c. All Network Parameters

d. All panel settings including broad cast time

e. Event Ordering

f. Block Acknowledge

g. Panel timer values for Auto Silence

h. Silence Inhibit

i. AC Fail Delay time

j. Supervision settings for power supply

k. Supervision settings for printers

l. All programmed logic equations

m. All custom action messages

n. All non-fire and output activations (if pre-programmed for logging) all active points filtered by alarms only

o. Troubles Only

p. Supervisory Alarms

q. Pre-Alarms

r. Disabled Points

s. Activated Points

t. All installed points filtered by Signaling Line Circuits (SLC) points

u. Logic Zones

v. Annunciators

w. Releasing Zones

x. Special Zones

y. Trouble Zones

E. Enclosures;

1. The Fire Alarm System Control Panel Enclosure shall be listed to UL #50 "Enclosures for Electrical Equipment, Non-Environmental Considerations", N.F.P.A. #72, and shall be approved for fire protection service.

2. The control panel enclosure shall be suitable for surface or semi-flush mounting.

3. The control panel enclosure shall be corrosion protected, given a rust-resistant prime coat, and manufacturer's standard finish.

4. The back box and door shall be constructed of 0.060" steel with provisions for electrical conduit connections into the sides and top.

5. The door shall be provided with a key cylinder lock and include a transparent opening for viewing all indicators.

6. For convenience, the door shall have the ability to be hinged on either the right or left-hand side.

7. The control panel enclosure shall be modular in structure for ease of installation, maintenance, and future expansion.

2.03 FIRE ALARM SYSTEM TERMINAL CABINETS

A. Fire Alarm System Terminal Cabinets shall be listed to UL #50 "Enclosures for Electrical Equipment, Non-Environmental Considerations", N.F.P.A. #72, and shall be approved for fire protection service.

B. The terminal cabinet shall be suitable for surface or semi-flush mounting.

C. The terminal cabinet shall be corrosion protected, given a rust-resistant prime coat, and manufacturer's standard finish.

D. The back box and door shall be constructed of 0.060" steel with provisions for electrical conduit connections into the sides and top.

E. The door shall be provided with a keyed cylinder lock that is keyed similar to the main Fire Alarm Control Panel enclosure and include a transparent opening for viewing all indicators.

F. For convenience, the door shall have the ability to be hinged on either the right or left-hand side.

G. The terminal cabinet shall be modular in structure for ease of installation, maintenance, and future expansion.

2.04 FIRE ALARM REMOTE ANNUNCIATOR PANELS (FARAP)

A. Provide a Fire Alarm Remote Annunciator Panel in the location(s) indicated on the contract documents.

B. The Fire Alarm Remote Annunciator Panel(s) shall be programmed to clearly indicate the exact same information that is displayed at the Fire Alarm Control Panel and shall be protected from unauthorized use by a keyed switch (similar to the main Fire Alarm Control Panel enclosure) or password.

C. The alphanumeric display annunciator shall be a supervised back-lit Liquid Crystal Display (LCD) containing a minimum of (80) eighty characters for visual annunciation of "Alarm", "Trouble", and "Supervisory" conditions.

D. The Fire Alarm Remote Annunciator Panel shall be provided with an integral piezo sounder for audible indication of an "Alarm" or "Trouble" conditions.

E. The Fire Alarm Remote Annunciator Panel shall be UL listed for Fire Alarm application with an On-line/Power Light Emitting Diode (LED).

F. The Fire Alarm Remote Annunciator Panel shall be capable of the following system functions:

1. Acknowledge.

2. Signal Silence.

3. System Reset.

2.05 MAIN FIRE ALARM SYSTEM POWER SUPPLIES (FAPS)

A. The Main Fire Alarm System Control Panel Power Supply shall meet UL #864 "Standard for Control Units and Accessories for Fire Alarm Systems", UL #1481 "Standard for Power Supplies for Fire-Protective Signaling Systems", N.F.P.A. requirements for power-limited operation, and shall be approved for fire protection service.

B. The Main Fire Alarm System Control Panel Power Supply shall be integral to the Fire Alarm System Control Panel itself or may be placed adjacent to the Fire Alarm System Control Panel within a separate key lockable metal enclosure that is approved by the manufacturer.

C. The Main Fire Alarm System Control Panel shall provide all power requirements for the Fire Alarm System Control Panel plus additional power for operation of external Notification Appliance Circuits (NACs), remote annunciators, remote paging units, etc.

D. The Main Fire Alarm System Control Panel Power Supply input power shall be 120 Volts A.C. at 50/60 Hertz.

E. The Main Fire Alarm System Control Panel shall continuously monitor all field cabling for Earth Ground conditions, and shall have the following "Trouble" Light Emitting Diode (LED) indicators:

1. AC Power Fail

2. Battery Fail

3. Negative Ground Fault

4. Positive Ground Fault

F. The Main Fire Alarm System Control Panel Power Supply shall be modular in design allowing additional Remote Power Supplies to be added.

2.06 REMOTE POWER SUPPLIES

A. Remote Power Supplies shall meet UL #864 "Standard for Control Units and Accessories for Fire Alarm Systems", N.F.P.A. requirements for power-limited operation, and shall be approved for fire protection service.

B. Provide Remote Power Supplies as required for a fully functional system.

C. Remote Power Supplies shall be placed in a key lockable metal enclosure that is approved by the manufacturer in locations approved by the Electrical and Fire Protection Engineer for auxiliary power to supply Notification Appliance Circuits (NACs).

D. Remote Power Supply input power shall be 120 Volts A.C. at 50/60 Hertz.

E. Remote Power Supplies shall be modular in design allowing additional Remote Power Supplies to be added.

2.07 BACK-UP BATTERIES

A. Provide quantities of Back-Up Batteries that exceed the minimum Back-Up Battery calculation requirements specified in Paragraph 1.30 of Specification Section 28 31 00.

B. Back-Up batteries for the Fire Alarm Control Panel Power Supply and for each Remote Power Supply shall be a minimum of 12 Volts D.C.

C. Back-Up Batteries shall be Absorbed Glass Material (AGM) or Gel style sealed batteries.

D. Back-Up Batteries shall have the following features:

1. Completely Maintenance Free.

2. Deep Cycle.

3. Used in any Position.

4. Low Self-Discharge Rates.

5. Safe for use in Low Ventilated Areas.

6. Can be transported by Ground or Air.

E. All batteries shall be placed inside a key lockable metal enclosure that is approved by the manufacturer.

F. Each battery shall have the date of installation written on the battery with a permanent marker and be visible when the enclosure door is open.

G. The back-up batteries shall be completely sealed, maintenance free, leak proof, and usable in any position.

2.08 INTERNAL BATTERY CHARGERS

A. The entire Fire Alarm System shall automatically charge Back-Up Batteries by an Internal Battery Charger that operates on a 120 Volts A.C. power source.

B. The Internal Battery Charger shall either be trickle or float charged and shall be capable of recharging batteries from a fully discharged condition to 100% within a 48-hour time period.

C. The Internal Battery Charger shall be an integral component of the Fire Alarm System Control Panel.

D. The charging rate of the Internal Battery Charger shall reduce upon attaining a fully charged condition to avoid damaging of the batteries.

E. The Internal Battery Charger shall provide either integral meters or readily accessible terminal facilities for the connection of portable meters by which the battery voltage and charging current can be determined.

F. The Internal Battery Charger shall be provided with a means for monitoring integrity to detect a battery charger failure and to provide a "Trouble" signal at the Fire Alarm System Control Panel.

G. This Internal Battery Charger will automatically inhibit the deep discharge of the system secondary batteries and shall be protected against the accidental reverse polarity connection of the secondary batteries.

2.09 EXTERNAL BATTERY CHARGERS

A. External Battery Charger shall automatically charge Back-Up Batteries and shall operate on a 120 Volts A.C. power source.

B. The External Battery Charger shall either be trickle or float charged and shall be capable of recharging batteries from a fully discharged condition to 100% within a 48-hour time period.

C. The External Battery Charger shall have the following forms of input:

1. A Notification Appliance Circuit (NAC) from the Fire Alarm System Control Panel.

2. A relay.

D. The charging rate of the External Battery Charger shall reduce upon attaining a fully charged condition to avoid damaging of the batteries.

E. The External Battery Charger shall provide either integral meters or readily accessible terminal facilities for the connection of portable meters by which the battery voltage and charging current can be determined.

F. The External Battery Charger shall be provided with a means for monitoring integrity to detect a battery charger failure and to provide a "Trouble" signal at the Fire Alarm System Control Panel.

G. This External Battery Charger will automatically inhibit the deep discharge of the system secondary batteries and shall be protected against the accidental reverse polarity connection of the secondary batteries.

2.10 MANUAL PULL STATIONS

A. Manual Pull Stations shall be listed to UL #38 "Standard for Manual Signaling Boxes for Fire Alarm Systems" and be compatible with the Fire Alarm System Control Panel.

B. Manual Pull Stations shall be double action type with a key operated test/reset lock (keyed similar to the Fire Alarm Control Panel), and designed so that after actuation, the Manual Pull Station cannot be restored to normal operating condition without the use of the key.

C. Manual pull stations shall be constructed of metal, Lexan, or polycarbonate with clearly visible operating instructions and the word "FIRE" in white lettering provided on the cover.

D. Each Manual Pull Stations shall be supervised by the Fire Alarm Control Panel.

E. Manual Pull Stations(s) shall not require more than 5 pounds of pull force to actuate.

F. Weatherproof Manual Pull Stations installed outdoors or in spaces of high humidity shall have the following characteristics:

1. Shall be listed for outdoor use by UL.

2. Shall have an operating temperature between -40°F and 151°F.

2.11 MANUAL PULL STATION STOPPERS (SHIELDS)

A. Manual Pull Station Stoppers (Shields) shall be U.L. Listed and approved for use with the Manual Pull Station being protected.

B. Manual Pull Stations located in Gymnasiums, Multi-Purpose Rooms, or other spaces in which impact to manual pull stations would be common and would cause a false alarm or damage shall be provided with a clear tamperproof polycarbonate or Lexan Stopper (Shield) and frame.

C. When required by the Authority Having Jurisdiction, the Manual Pull Station Stopper (Shield) shall be provided with an integral 9 Volts D.C. battery operated piezo warning horn that produces a warning sound of 95 dB at a distance of 1'-0".

D. The cover shall have the message "IN CASE OF FIRE – LIFT COVER" readily visible.

E. Weatherproof Manual Pull Station Covers installed outdoors or in places of high humidity shall be provided with a closed cell gasket or a rain tight seal.

2.12 HEAT DETECTORS

A. Heat Detectors shall be listed to UL #521 "Heat Detectors for Fire Protective Signaling Systems", UL #539 "Standard for Single and Multiple Station Heat Alarms", and FM #3210 "Heat Detectors for Automatic Fire Alarm Signaling".

B. Heat Detectors shall be 24 Volts D.C., Intelligent, Analog, and Addressable that shall connect to the Fire Alarm System Control Panel's supervised "Class A B" Signaling Line Circuit (SLC).

C. Heat Detectors shall be provided with (2) two Light Emitting Diodes (LEDs) to provide visible Heat Detector status that shall be controlled by the Fire Alarm System Control Panel.

D. The Fire Alarm System Control Panel shall provide coded signals to the Heat Detector that shall cause the Light Emitting Diodes (LEDs) to indicate the following status:

1. Normal Operating Condition

2. Alarm Condition

3. Latch On

4. Latch Off

E. An output connection shall also be provided in the base of the Heat Detector for connections to the following items:

1. External remote alarm Light Emitting Diode (LED).

2. Sounder base rated at a minimum of 85 dBA.

3. "Form C" Relay base.

4. Isolator base.

F. Heat Detectors shall have the following characteristics:

1. Low profile ceiling-mount/wall-mount.

2. Allow pre-cabling of the base.

3. Plug-in style of head.

4. Mounted into a twist-lock base.

5. Constructed of off-white UV resistant polymer.

6. Detachable from the mounting base.

7. Cabling terminals accessible from the “room-side” after mounting.

G. Upon receiving an alarm signal at the Fire Alarm Control Panel from a Heat Detector, all notification appliances shall operate.

H. Heat Detectors shall have a maximum listed smooth ceiling "Area of Coverage" of 50'-0" x 50'-0" (2,500 square feet) and shall be installed in accordance with N.F.P.A. #72.

I. Heat Detector Types:

1. "Fixed Temperature" Heat Detectors:

a. "Fixed Temperature" Heat Detectors shall be rated at 135°F where ambient temperature does not exceed 100°F and rated for 194° Fahrenheit in areas subject to high ambient temperatures in excess of 100°F.

2. "Rate of Rise" Heat Detectors:

a. "Rate of Rise" Heat Detectors shall have an element rated at 15°F per minute.

3. Combination "Fixed Temperature" and "Rate of Rise" Heat Detectors:

a. The "Fixed Temperature" portion of the Heat Detectors shall be rated at 135°F where ambient temperature does not exceed 100°F and rated for 194° Fahrenheit in areas subject to high ambient temperatures in excess of 100°F.

b. The "Rate of Rise" portion of the Heat Detector shall have an element rated at 15°F per minute.

J. Provide remote indicating lamps for Heat Detectors that when installed, the Light Emitting Diodes (LEDs) are not visible from the walking surface / floor, such as when installed above a ceiling, at an elevation higher than 15'-0" above finished floor, in an attic, etc.

K. Provide anti-ligature guards for Heat Detectors installed in Gymnasiums, Multi-Purpose Rooms, Play Areas, Play Sheds, patient rooms or in areas subject to mechanical damage.

2.13 LINEAR HEAT DETECTION CABLES

A. Linear Heat Detection Cables shall be listed to UL #521 "Heat Detectors for Fire Protective Signaling Systems", UL #539 "Standard for Single and Multiple Station Heat Alarms", and FM #3210 "Heat Detectors for Automatic Fire Alarm Signaling".

B. Linear Heat Detector Cables shall be comprised of (2) low resistance, tri-metallic steel conductors individually encased in a heat sensitive polymer. The encased conductors are twisted together to impose a spring pressure between them, then spirally wrapped with a protective tape and finished with an outer jacket that is flame retardant, chemical resistant, low moisture absorption, and UV protected to suit the installation environment.

C. The inner conductors of the Linear Heat Detector Cables are coated with a vinyl of polymer-based jacket that are chemically engineered to break down at specific fixed temperatures allowing the conductors to make contact with one another and thereby signal an "Alarm" condition.

D. Linear Heat Detector Cables shall consist of sensing elements which respond to a specific temperature at any point along their length and shall not require that any special length be heated in order to initiate an "Alarm" condition.

E. Linear Heat Detector Cables shall connect to the Fire Alarm System Control Panel's supervised "Class B" Signaling Line Circuit (SLC).

F. Linear Heat Detector Cables shall be installed in continuous runs without taps or branches in accordance with applicable sections of N.F.P.A. #70, N.F.P.A. #72, or as determined by the local Authority Having Jurisdiction.

G. Linear Heat Detector Cables shall be simple to install and in-line spliced with Splicing Sleeves or Splicing Connections using common tools. Junctions shall be made without affecting the integrity of the system.

H. Linear Heat Detector Cables installed in areas of high humidity or dampness shall require the use of SFTS Sealant Tape for all in-line splices where Splicing Sleeves or Splicing Connections are used.

I. The Linear Heat Detector Cable portion of every initiating circuit shall terminate at each end in the following locations with terminals, the use of wire nuts or other similar wiring devices is not allowed.

1. An Approved Zone Box.

2. End-of-Line Zone Box.

3. Or other approved junction box provided as part of the system.

J. Strain relief connectors shall be installed in all junction boxes where Linear Heat Detector Cables enter or exit the enclosure to hold the cable securely and the conduit shall be completely closed off with duct seal so that no gases, condensation, or dust will be able to reach the inside of the enclosure.

K. All zone box enclosures shall be rated and approved for use in the environment where they will be installed.

L. Whenever the Linear Heat Detector Cable comes within 6'-0" of the floor, it should be enclosed in conduit. This applies particularly to entry into:

1. Manual Stations.

2. Control Units.

3. Zone or end-of-line junction boxes.

4. To all runs through floors.

M. Linear Heat Detector Cable sensitivity shall not be affected by changes in ambient temperature or length of cable used on the detection circuit.

N. The maximum length of each Linear Heat Detector Cable shall be limited by the capacity of the Fire Alarm System Control Panel but shall not exceed 5,000 lineal feet.

O. Where mounting of Linear Heat Detector Cables is difficult due to lack of appropriate support structures or mounting surfaces, the Linear Heat Detector Cables shall be provided with Messenger wires.

1. Messenger wires shall consist of high tensile strength stainless steel wire.

2. Messenger wires shall be wound around the Linear Heat Detector Cable at the rate of approximately one turn per foot.

3. When using Messenger wires, turnbuckles and eyebolts must be employed at each end of a run to place tension on the support wire.

4. The maximum Linear Heat Detector Cable run length between turnbuckles shall not exceed 250'-0".

5. The Messenger wire must also be supported with approved intermediate fasteners at intervals ranging from 15'-0" to 50'-0" depending upon the application.

2.14 SMOKE DETECTORS

A. Smoke Detectors shall be listed to UL #217 "Standard for Single and Multiple Station Smoke Alarms", UL #228 "Standard for Door Closers-Holders, With or Without Integral Smoke Detectors", UL #268 "Smoke Detectors for Fire Alarm Systems", and UL #1730 "Standard for Smoke Detector Monitors and Accessories for Individual living Units of multifamily Residences and Hotel/Motel Rooms".

B. Smoke Detectors shall be 24 Volts D.C., Intelligent, Analog, and Addressable that shall connect to the Fire Alarm System Control Panel's supervised "Class A B" Signaling Line Circuit (SLC).

C. Smoke detector sensitivity shall be set through the Fire Alarm System Control Panel and shall be adjustable in the field through the field programming of the system to meet the requirements of N.F.P.A. #72.

D. Smoke Detectors shall be provided with (2) two Light Emitting Diodes (LEDs) to provide visible Smoke Detector status that shall be controlled by the Fire Alarm System Control Panel.

E. The Fire Alarm System Control Panel shall provide coded signals to the Smoke Detector that shall cause the Light Emitting Diodes (LEDs) to indicate the following status:

1. Normal Operating Condition

2. Alarm Condition

3. Out of Sensitivity

4. Latch On

5. Latch Off

F. An output connection shall also be provided in the base of the Smoke Detector for connections to the following items:

1. External remote alarm Light Emitting Diode (LED).

2. Sounder base rated at a minimum of 85 dBA.

3. "Form C" Relay base.

4. Isolator base.

G. Smoke Detectors shall have the following characteristics:

1. Low profile ceiling-mount/wall-mount.

2. Allow pre-cabling of the base.

3. Plug-in style of head.

4. Mounted into a twist-lock base.

5. Constructed of off-white UV resistant polymer.

6. Detachable from the mounting base.

7. Operating range between 32°F and 100°F.

8. Cabling terminals accessible from the “room-side” after mounting.

H. Upon receiving an alarm signal at the Fire Alarm Control Panel from a system style Smoke Detector (outside of a dwelling unit), all notification appliances shall operate.

I. Smoke Detectors shall have a maximum listed smooth ceiling "Area of Coverage" of 30'-0" x 30'-0" (900 square feet) and shall be installed in accordance with N.F.P.A. #72.

J. Photoelectric Smoke Detectors:

1. Detectors shall use the photoelectric (light scattering) principle to measure smoke density and shall, on command from the control panel, send data to the Fire Alarm System Control Panel indicate the analog level of smoke density.

2. The photoelectric smoke detector shall have a sensitivity range between 0.67% and 3.77% obscuration per foot as measured in the UL smoke box with the following divisions:

a. Most Sensitive: 1.0% obscuration per foot

b. More Sensitive: 2.0% obscuration per foot

c. Normal Sensitive: 2.5% obscuration per foot

d. Less Sensitive: 3.0% obscuration per foot

e. Least Sensitive: 4.0% obscuration per foot

K. Ionization Smoke Detectors:

1. Detectors shall use a dual chamber design to automatically compensate for the following environmental conditions:

a. Atmospheric Pressure

b. Humidity

c. Ambient Temperature

L. Provide remote indicating lamps for Smoke Detectors that when installed. The Light Emitting Diodes (LEDs) are not visible from the walking surface / floor, such as when installed above a ceiling, at an elevation higher than 15'-0" above finished floor, etc.

M. Provide anti-ligature guards for Strobe Only Appliances installed in Gymnasiums, Multi-Purpose Rooms, Play Areas, Play Sheds, patient rooms or in areas subject to mechanical damage.

2.15 DUCT SMOKE DETECTORS

A. Duct Smoke Detectors shall be listed to UL #268A "Standard for Smoke Detectors for Duct Application" and installed in accordance with manufacturer's recommendations.

B. Duct Smoke Detectors shall be Intelligent, Analog, Addressable, 24 Volts D.C. type with visual alarm and power indicators, and a reset switch that shall connect to the Fire Alarm System Control Panel's supervised "Class A B" Signaling Line Circuit (SLC) loops for monitoring and control.

C. Duct Smoke Detectors shall use the photoelectric (light scattering) principle to measure smoke density and shall, on command from the control panel, send data to the Fire Alarm System Control Panel representing the analog level of smoke density.

D. Duct Smoke Detectors shall have an operating air velocity range of 100 feet per minute to 4,000 feet per minute.

E. Duct Smoke Detectors shall be capable of providing a trouble signal in the event that the front cover is removed.

F. Duct Smoke Detector shall be provided with properly sized air sampling tubes.

G. Each Duct Smoke Detector shall be provided with a "Form C" Relay rated at 30 Volts D.C. and at 2.0 Amps for controlling ancillary equipment.

H. Duct Smoke Detectors shall have a sensitivity range between 0.79% and 2.46% obscuration per foot.

I. The Duct Smoke Detector "Response Time" shall not exceed 15 seconds.

J. Duct Smoke Detectors shall initiate an "Alarm" "Supervisory" signal to the Fire Alarm Control Panel and initiate global shutdown of all mechanical units' shutdown of the H.V.A.C. unit in which an Alarm Supervisory signal occurred.

K. Provide remote indicating lamps for Dust Smoke Detectors that when installed, the Light Emitting Diodes (LEDs) are not visible from the walking surface / floor or when installed at an elevation higher than 15'-0" above finished floor.

2.16 DUCT SMOKE DETECTOR REMOTE TEST STATIONS

A. Provide one (1) one Duct Smoke Detector Remote Test Station for each duct smoke detector installed that is not visible or readily accessible from the floor.

B. The use of a single Duct Smoke Detector Remote Test Station to serve multiple duct smoke detectors will not be allowed.

C. The Duct Smoke Detector Remote Test Station shall be a polarized device that is designed for both conventional and intelligent applications and shall operate on a 32 Volts D.C. power source.

D. A key switch on the Duct Smoke Detector Remote Test Station shall be used to select the connected duct smoke detector for testing or resetting.

E. Duct Smoke Detector Remote Test Stations Light Emitting Diodes (LEDs) shall indicate the status of the following conditions:

1. Standby: Blinking Green LED.

2. Trouble: Solid Amber LED.

3. Maintenance: Blinking Amber LED.

4. Alarm: Solid Red LED.

2.17 BEAM SMOKE DETECTORS

A. Beam Smoke Detectors shall be listed to UL #217 "Standard for Single and Multiple Station Smoke Alarms" and UL #268 "Smoke Detectors for Fire Alarm Systems".

B. Beam Smoke Detectors shall be 24 Volts D.C., Intelligent, Analog, and Addressable that shall connect to the Fire Alarm System Control Panel's supervised "Class A B" Signaling Line Circuit (SLC).

C. Beam Smoke Detector sensitivity shall be set at the detector which shall have four (4) standard selectable sensitivity settings along with two (2) adjustable sensitivity settings.

D. Beam Smoke Detectors shall be provided with (3) three Light Emitting Diodes (LEDs) to provide visible Beam Smoke Detector status that shall be controlled by the Fire Alarm System Control Panel.

1. Normal Operation.

2. Alarm Condition.

3. Trouble Condition

E. The Beam Smoke Detector unit shall consist of a separate transmitter / receiver unit and a reflector unit.

F. Beam Smoke Detectors shall allow for beam alignment between the detector and the reflector to be done at the detector.

G. When the Beam Smoke Detector obscuration reaches pre-set alarm thresholds, the detector shall generate an alarm signal.

H. Complete blockage of Beam Smoke Detectors shall cause a trouble signal.

I. Slow changes in obscuration due to a build-up of dirt or dust on the lens of the Beam Smoke Detector shall be compensated for by a microcontroller that continuously monitors the signal strength and periodically updates the alarm and trouble thresholds.

J. Beam Smoke Detectors shall be capable of automatically adjusting sensitivity by means of advanced software algorithms and when the self-compensation circuit reaches its limit, the detector shall generate a trouble signal, indicating the need for service.

K. The effects of stratification shall be evaluated when locating Beam Smoke Detectors.

L. Beam Smoke Detectors shall be considered equivalent to a row of spot-type smoke detectors for level or sloping ceiling applications. The maximum "Area of Coverage" per Beam Smoke Detector is 30'-0" x 330'-0".

M. Provide remote indicating lamps for Beam Smoke Detectors that when installed, the Light Emitting Diodes (LEDs) are not visible from the walking surface / floor, such as when installed at an elevation higher than 15'-0" above finished floor.

N. Provide anti-ligature guards for Beam Smoke Detectors (transmitter / receiver units and reflector units) installed in Gymnasiums, Multi-Purpose Rooms, Play Areas, Play Sheds, or in areas subject to mechanical damage.

2.18 CARBON MONOXIDE ONLY DETECTORS

A. Carbon Monoxide Only Detectors shall be listed to UL #2075 "Gas and Vapor Detectors and Sensors" and be compatible with the Fire Alarm System Control Panel.

B. Carbon Monoxide Only Detectors shall be 24 Volts D.C., Intelligent, Analog, and Addressable that shall connect to the Fire Alarm System Control Panel's supervised "Class A B" Signaling Line Circuit (SLC).

C. Carbon Monoxide Only Detector shall be provided with (2) two Light Emitting Diodes (LEDs) to provide visible Carbon Monoxide Only Detector status.

D. The Fire Alarm System Control Panel shall provide coded signals to the Carbon Monoxide Only Detector that shall cause the Light Emitting Diodes (LEDs) to indicate the following status:

1. Normal Operating Condition

2. Alarm Condition

3. End of life

E. Carbon Monoxide Only Detectors shall be equipped with the following items:

1. Trouble Relay.

2. A 6 year "End-of-Life" timer that initiate a "Trouble" signal to the Fire Alarm System Control Panel to indicate Carbon Monoxide Detector replacement.

3. A means to test CO gas entry into the Carbon Monoxide Detector’s sensing cell.

F. An output connection shall also be provided in the base of the Carbon Monoxide Only Detector for connections to the following items:

1. External remote alarm Light Emitting Diode (LED).

2. Sounder base rated at a minimum of 85 dBA.

3. "Form C" Relay base.

4. Isolator base.

G. Carbon Monoxide Only Detectors shall have the following characteristics:

1. Low profile ceiling-mount/wall-mount.

2. Allow pre-cabling of the base.

3. Plug-in style of head.

4. Mounted into a twist-lock base.

5. White finish.

6. Detachable from the mounting base.

7. Operating range between 32°F and 100°F.

8. Cabling terminals accessible from the “room-side” after mounting.

H. Carbon Monoxide Only Detectors shall have a maximum listed "Area of Coverage" of 2,000 square feet and shall be installed in accordance with N.F.P.A. #72.

2.19 COMBINATION SMOKE / CARBON MONOXIDE DETECTORS

A. Combination Smoke / Carbon Monoxide Detectors shall be listed to UL #268 "Smoke Detectors for Fire Alarm Systems", UL #1730 "Standard for Smoke Detector Monitors and Accessories for Individual living Units of Multifamily Residences and Hotel/Motel Rooms", UL #2075 "Gas and Vapor Detectors and Sensors" and be compatible with the Fire Alarm System Control Panel.

B. Combination Smoke / Carbon Monoxide Detectors shall be 24 Volts D.C., Intelligent, Analog, and Addressable that shall connect to the Fire Alarm System Control Panel's supervised "Class B" Signaling Line Circuit (SLC).

C. Combination Smoke / Carbon Monoxide Detectors shall be photoelectric smoke sensing and electrochemical CO sensing.

D. Combination Smoke / Carbon Monoxide Detectors shall be provided with two (2) Light Emitting Diodes (LEDs) to provide visible Combination Smoke / Carbon Monoxide Detectors status.

E. The Fire Alarm System Control Panel shall provide coded signals to the Combination Smoke / Carbon Monoxide Detectors that shall cause the Light Emitting Diodes (LEDs) to indicate the following status:

1. Normal Operating Condition

2. Smoke Alarm Condition

3. Smoke Maintenance

4. CO Alarm Condition

5. CO Trouble / End of life

F. Combination Smoke / Carbon Monoxide Detectors shall be equipped with the following items:

1. Trouble Relay.

2. "Hush" button that when activated will silence the Carbon Monoxide Detector sounder for 5 minutes.

3. A 6 year "End-of-Life" timer that initiate a "Trouble" signal to the Fire Alarm System Control Panel to indicate Carbon Monoxide Detector replacement.

4. Send distinct smoke and CO signals to the Fire Alarm System Control Panel.

5. A means to test CO gas entry into the Carbon Monoxide Detector's sensing cell.

6. A replaceable CO cell that can be replaced at end of cell life.

G. An output connection shall also be provided in the base of the Carbon Monoxide Only Detector for connections to the following items:

1. External remote alarm Light Emitting Diode (LED).

2. Sounder base rated at a minimum of 85 dBA.

3. "Form C" Relay base.

4. Isolator base.

H. Combination Smoke / Carbon Monoxide Detectors shall have the following characteristics:

1. Low profile ceiling-mount/wall-mount.

2. Allow pre-cabling of the base.

3. Plug-in style of head.

4. Mounted into a twist-lock base.

5. White finish.

6. Detachable from the mounting base.

7. Operating range between 32°F and 122°F.

8. Cabling terminals accessible from the "room-side" after mounting.

I. Photoelectric Smoke Detectors:

1. Detectors shall use the photoelectric (light scattering) principle to measure smoke density and shall, on command from the control panel, send data to the Fire Alarm System Control Panel representing the analog level of smoke density.

2. The photoelectric smoke detector shall have a sensitivity range between 0.67% and 3.77% obscuration per foot as measured in the UL smoke box with the following divisions:

a. Most Sensitive: 1.0% obscuration per foot

b. More Sensitive: 2.0% obscuration per foot

c. Normal Sensitive: 2.5% obscuration per foot

d. Less Sensitive: 3.0% obscuration per foot

e. Least Sensitive: 4.0% obscuration per foot

J. Provide remote indicating lamps for Smoke Detectors that when installed. The Light Emitting Diodes (LEDs) are not visible from the walking surface / floor, such as when installed above a ceiling, at an elevation higher than 15'-0" above finished floor, etc.

K. Combination Smoke / Carbon Monoxide Detectors shall have a maximum listed "Area of Coverage" of 30'-0" x 30'-0" (900 square feet) and shall be installed in accordance with N.F.P.A. #72.

2.20 MULTI-CRITERIA DETECTORS

A. Multi-Criteria Detectors shall be listed to UL #217 "Standard for Single and Multiple Station Smoke Alarms", UL #268 "Smoke Detectors for Fire Alarm Systems", UL #1730 "Standard for Smoke Detector Monitors and Accessories for Individual living Units of multifamily Residences and Hotel/Motel Rooms", UL #521 "Heat Detectors for Fire Protective Signaling Systems", UL #539 "Standard for Single and Multiple Station Heat Alarms", and FM #3210 "Heat Detectors for Automatic Fire Alarm Signaling", UL #2075 "Gas and Vapor Detectors and Sensors" and be compatible with the Fire Alarm System Control Panel.

B. Multi-Criteria Detectors shall be 24 Volts D.C., Intelligent, Analog, and Addressable that shall connect to the Fire Alarm System Control Panel's supervised "Class A B" Signaling Line Circuit (SLC).

C. The Multi-Criteria Detector shall have the ability to detect all four major elements of a fire.

1. Photoelectric chamber senses airborne particulate for smoke detection.

2. Electrochemical cell technology monitors carbon monoxide (CO) produced by smoldering fires.

3. Infrared (IR) sensing measures ambient light levels and flame signatures.

4. Thermal detection monitors temperature.

D. An output connection shall also be provided in the base of the Multi-Criteria Detector for connections to the following items:

1. External remote alarm Light Emitting Diode (LED).

2. Sounder base rated at a minimum of 85 dBA.

3. "Form C" Relay base.

4. Isolator base.

E. Multi-Criteria Detectors shall have the following characteristics:

1. Low profile ceiling-mount/wall-mount.

2. Allow pre-cabling of the base.

3. Plug-in style of head.

4. Mounted into a twist-lock base.

5. Constructed of off-white UV resistant polymer.

6. Detachable from the mounting base.

7. Operating range between 32°F and 100°F.

8. Cabling terminals accessible from the “room-side” after mounting.

9. Unique ability to detect all four major elements of a fire

10. Highest nuisance alarm immunity

11. Advanced algorithms interpret and respond to the multiple inputs

12. Six levels of sensitivity

13. CO sensing for fastest response to slow-developing, smoldering fires

14. Fully integrated infrared sensing to support the fire alarm decision

15. Automatic drift compensation of smoke sensor and CO cell

16. Superior EMI protection

17. Twin LED indicators providing 360˚ visibility

18. LEDs can be panel controlled to blink, latch on, latch off

19. Built-in test switch

F. Provide remote indicating lamps for Multi-Criteria Detectors that when installed. The Light Emitting Diodes (LEDs) are not visible from the walking surface / floor, such as when installed above a ceiling, at an elevation higher than 15'-0" above finished floor, etc.

G. Provide anti-ligature guards for Multi-Criteria Detectors installed in Gymnasiums, Multi-Purpose Rooms, Play Areas, Play Sheds, patient rooms or in areas subject to mechanical damage.

H. Smoke Detectors shall have the following features:

1. A maximum listed smooth ceiling "Area of Coverage" of 30'-0" x 30'-0" (900 square feet) and shall be installed in accordance with N.F.P.A. #72.

2. Shall use the photoelectric (light scattering) principle to measure smoke density and shall, on command from the control panel, send data to the Fire Alarm System Control Panel indicate the analog level of smoke density.

I. Heat Detectors shall have the following features:

1. A maximum listed smooth ceiling "Area of Coverage" of 50'-0" x 50'-0" (2,500 square feet) and shall be installed in accordance with N.F.P.A. #72.

2. Shall be "Fixed Temperature" style.

3. Shall be rated at 135°F.

J. Carbon Monoxide Detectors shall have the following features:

1. A maximum listed "Area of Coverage" of 2,000 square feet and shall be installed in accordance with N.F.P.A. #72.

2. A minimum "End-of-Life" timer of 6 years

3. The Carbon Monoxide Detector shall not be replaceable.

2.21 SOUNDER BASE ONLY APPLIANCES

A. Sounder Base Only Appliances shall be listed to UL #268 "Smoke Detectors for Fire Alarm Systems", UL #464 "Standard for Audible Signal Appliances", and be compatible with the Fire Alarm System Control Panel.

B. Sounder Base Only Appliances shall be provided in residential dwelling unit applications only.

C. The Fire Alarm System Control Panel shall be able to:

1. Distinguish the Sounder Base Only Appliance as a unique device type on the Signaling Line Circuit (SLC) loop or on a Notification Appliance Circuit (NAC).

2. When connected to a Notification Appliance Circuit (NAC), power is supervised via the Notification Appliance Circuit (NAC) circuit supervision while in standby mode (EOL resistor required for Class B operation).

3. Can command an individual sounder base or a group of sounders in a suite or other multi-room configuration to activate.

4. Capable of allowing selection of volume, tone, and group.

D. Sounder Base Only Appliances shall be capable of producing:

1. Two distinct volume levels:

a. 75 dBA at 10'-0".

b. 85 dBA at 10'-0".

2. A variety of tone patterns required by N.F.P.A. #72 for commercial and residential applications:

a. Continuous.

b. ANSI Temporal 3 (Smoke Alarm).

c. ANSI Temporal 4 (CO Alarm).

d. March Time.

E. The Sounder Base Only Appliance rated decibel output shall be de-rated by 6 decibels each time the distance is doubled as follows:

1. At a distance of 10'-0" from sounder: Rated dB Output.

2. At a distance of 20'-0" from sounder: Rated dB Output less 6 dB.

3. At a distance of 40'-0" from sounder: Rated dB Output less 12 dB.

F. Sounder Base Only Appliances shall include a tamper-resist feature that prevents its removal from the base without the use of a tool.

G. Sounder Base Only Appliances shall have a mechanical locking feature that prevents removal of attached sensor head.

H. Sounder Base Only Appliances shall have the following features:

1. Capability of interconnection to other sounder bases to allow activation of all sounder bases within specific dwelling units.

2. Capability of being synchronized in accordance with N.F.P.A. #72.

3. Be silenceable from the Fire Alarm System Control Panel.

I. Sounder Base Only Appliances shall be installed in pre-wired mounting plate that fits various junction box sizes.

2.22 LOW FREQUENCY SOUNDER BASE ONLY APPLIANCES

A. Low Frequency Sounder Base Only Appliances shall be listed to UL #268 "Smoke Detectors for Fire Alarm Systems", UL #464 "Standard for Audible Signal Appliances", UL #1971 “Standard for Signaling Devices for the Hearing Impaired” and be compatible with the Fire Alarm System Control Panel.

B. Low Frequency Sounder Base Only Appliances shall be provided in residential dwelling unit applications only.

C. The Fire Alarm System Control Panel shall be able to:

1. Distinguish the Low Frequency Sounder Base Only Appliance as a unique device type on the Signaling Line Circuit (SLC) loop or on a Notification Appliance Circuit (NAC).

2. When connected to a Notification Appliance Circuit (NAC), power is supervised via the Notification Appliance Circuit (NAC) circuit supervision while in standby mode (EOL resistor required for Class B operation).

3. Can command an individual Low Frequency Sounder Base or a group of Low Frequency Sounder Bases in a suite or other multi-room configuration to activate.

4. Capable of allowing selection of volume, tone, and group.

D. Low Frequency Sounder Base Only Appliances shall have the following characteristics:

1. Shall be 24 Volts D.C.

2. Be installed on the ceiling or on the wall.

3. Shall be red or white finished.

4. Tamper resistant construction.

5. Frequency range of 520 Hz ±10% square wave tone.

6. Permanent marking on the housing that reads "Low Frequency Sounder".

7. Shall be plug-in type.

8. Shall terminate at a universal mounting plate.

E. Low Frequency Sounder Base Only Appliances shall be capable of producing:

1. Two distinct volume levels:

a. 75 dBA at 10'-0".

b. 85 dBA at 10'-0".

2. A variety of tone patterns required by N.F.P.A. #72 for commercial and residential applications:

a. Continuous.

b. ANSI Temporal 3 (Smoke Alarm).

c. ANSI Temporal 4 (CO Alarm).

d. March Time.

F. The Low Frequency Sounder Base Only Appliance rated decibel output shall be de-rated by 6 decibels each time the distance is doubled as follows:

1. At a distance of 10'-0" from sounder: Rated dB Output.

2. At a distance of 20'-0" from sounder: Rated dB Output less 6 dB.

3. At a distance of 40'-0" from sounder: Rated dB Output less 12 dB.

G. Low Frequency Sounder Base Only Appliances shall include a tamper-resist feature that prevents its removal from the base without the use of a tool.

H. Low Frequency Sounder Base Only Appliances shall have a mechanical locking feature that prevents removal of attached sensor head.

I. Low Frequency Sounder Base Only Appliances shall have the following features:

1. Capability of interconnection to other sounder bases to allow activation of all sounder bases within specific dwelling units.

2. Capability of being synchronized in accordance with N.F.P.A. #72.

3. Be silenceable from the Fire Alarm System Control Panel.

J. Low Frequency Sounder Base Only Appliances shall be installed in pre-wired mounting plate that fits various junction box sizes.

2.23 LOW FREQUENCY SOUNDER ONLY APPLIANCES

A. Low Frequency Sounder Only Appliances shall be listed to UL #464 "Standard for Audible Signal Appliances", UL #1971 “Standard for Signaling Devices for the Hearing Impaired", N.F.P.A. #72, shall be approved for fire protective service, and be compatible with the Fire Alarm System Control Panel.

B. Low Frequency Sounder Only Appliances shall be Intelligent, Analog, and Addressable that shall connect to the Fire Alarm System Control Panel's Notification Appliance Circuits (NAC) or Signaling Line Circuits (SLC).

C. Low Frequency Sounder Only Appliances shall have the following characteristics:

1. Shall be 24 Volts D.C.

2. Be installed on the ceiling or on the wall.

3. Shall be red or white finished.

4. Tamper resistant construction.

5. Frequency range of 520 Hz ±10% square wave tone.

6. Permanent marking on the housing that reads "Low Frequency Sounder".

7. Shall have three (3) audibility options and an option to switch between a temporal three-pattern and a non-temporal (continuous) pattern.

8. Shall produce a nominal sound output of 76 dBA at 10'-0"

9. Shall produce a maximum sound output of 80 dBA at 10'-0".

10. Shall be plug-in type.

11. Shall terminate at a universal mounting plate.

D. The Low Frequency Sounder Only Appliance rated decibel output shall be de-rated by 6 decibels each time the distance is doubled as follows:

1. At a distance of 10'-0" from sounder: Rated dB Output.

2. At a distance of 20'-0" from sounder: Rated dB Output less 6 dB.

3. At a distance of 40'-0" from sounder: Rated dB Output less 12 dB.

E. Low Frequency Sounder Only Appliances installed in interior climate-controlled spaces shall have an operating temperature between 32°F and 120°F.

F. If the Low Frequency Sounder Only Appliances are not UL 9th edition listed with the corresponding panel or power supply being used, then refer to the compatibility listing of the panel to determine maximum devices on a circuit.

2.24 STROBE ONLY APPLIANCES

A. Strobe Only Appliances shall be listed to UL #1638 "Standard for Visual Signaling Appliances - Private Mode Emergency and General Utility Signaling", shall be approved for fire protective service, and be compatible with the Fire Alarm System Control Panel.

B. Strobe Only Appliances shall be Intelligent, Analog, and Addressable that shall connect to the Fire Alarm System Control Panel's Notification Appliance Circuits (NAC) or Signaling Line Circuits (SLC).

C. Strobe Only Appliances shall have the following characteristics:

1. Shall be 24 Volts D.C.

2. Be installed on the ceiling or on the wall.

3. Shall be red or white finished.

4. Tamper resistant construction.

5. Shall flash at a rate of one flash per second at 1Hz over the strobes entire operating voltage.

6. Shall be xenon / Zenon flash tube type.

7. Associated lens/reflector system shall be rated at a minimum of 15 candela and meet or exceed the requirements of the Americans with Disabilities Act (ADA).

8. Shall have field selectable candela settings.

9. Shall be plug-in type.

10. Shall terminate at a universal mounting plate.

11. Shall be backward compatible.

D. Strobe Only Appliances installed in interior climate-controlled spaces shall have an operating temperature between 32°F and 120°F.

E. Weatherproof Strobe Only Appliances installed outdoors or in spaces of high humidity shall have the following characteristics:

1. Shall be listed for outdoor use by UL.

2. Shall have an operating temperature between -40°F and 151°F.

3. Shall be provided with an outdoor/weatherproof back box with:

a. Conduit entries of ½" and ¾".

b. Weatherproof sealant per the manufacturer's recommendations to prevent moisture from entering the structure.

F. If the Strobe Only Appliances are not UL 9th edition listed with the corresponding panel or power supply being used, then refer to the compatibility listing of the panel to determine maximum devices on a circuit.

G. Provide anti-ligature guards for Strobe Only Appliances installed in Gymnasiums, Multi-Purpose Rooms, Play Areas, Play Sheds, patient rooms or in areas subject to mechanical damage.

2.25 HORN ONLY APPLIANCES

A. Horn Only Appliances shall be listed to UL #464 "Standard for Audible Signal Appliances", UL #1971 "Standard for Signaling Devices for the Hearing Impaired", shall be approved for fire protective service, and be compatible with the Fire Alarm System Control Panel.

B. Horn Only Appliances shall be Intelligent, Analog, and Addressable that shall connect to the Fire Alarm System Control Panel's Notification Appliance Circuits (NAC) or Signaling Line Circuits (SLC).

C. Horn Only Appliances shall have the following characteristics:

1. Shall be 24 Volts D.C.

2. Be installed on the ceiling or on the wall.

3. Shall be red or white finished.

4. Tamper resistant construction.

5. Shall have three (3) audibility options and an option to switch between a temporal three-pattern and a non-temporal (continuous) pattern.

6. Shall produce a nominal sound output of 82 dBA at 10'-0"

7. Shall produce a maximum sound output of 90 dBA at 10'-0".

8. Shall be plug-in type.

9. Shall terminate at a universal mounting plate.

10. Shall be backward compatible.

D. The Horn Only Appliance rated decibel output shall be de-rated by 6 decibels each time the distance is doubled as follows:

1. At a distance of 10'-0" from sounder: Rated dB Output.

2. At a distance of 20'-0" from sounder: Rated dB Output less 6 dB.

3. At a distance of 40'-0" from sounder: Rated dB Output less 12 dB.

E. Horn Only Appliances installed in interior climate-controlled spaces shall have an operating temperature between 32°F and 120°F.

F. Weatherproof Horn Only Appliances installed outdoors or in spaces of high humidity shall have the following characteristics:

1. Shall be listed for outdoor use by UL.

2. Shall have an operating temperature between -40°F and 151°F.

3. Shall be provided with an outdoor/weatherproof back box with:

a. Conduit entries of ½" and ¾".

b. Weatherproof sealant per the manufacturer's recommendations to prevent moisture from entering the structure.

G. If the Horn Only Appliances are not UL 9th edition listed with the corresponding panel or power supply being used, then refer to the compatibility listing of the panel to determine maximum devices on a circuit.

H. Provide anti-ligature guards for Horn Only Appliances installed in Gymnasiums, Multi-Purpose Rooms, Play Areas, Play Sheds, patient rooms or in areas subject to mechanical damage.

2.26 MINI-HORN ONLY APPLIANCES

A. Mini-Horn Only Appliances shall be listed to UL #464 "Standard for Audible Signal Appliances", shall be approved for fire protective service, and be compatible with the Fire Alarm System Control Panel.

B. Mini-Horn Only Appliances shall be Intelligent, Analog, and Addressable that shall connect to the Fire Alarm System Control Panel's Notification Appliance Circuits (NAC) or Signaling Line Circuits (SLC).

C. Mini-Horn Only Appliances shall have the following characteristics:

1. Shall be 24 Volts D.C.

2. Be installed on the ceiling or on the wall

3. Shall be red or white finished

4. Tamper resistant construction

5. Low current draw

6. Frequency range of 3 KHZ (nominal)

7. Shall have Hi/Low volume setting

8. Shall have two (2) audibility options and an option to switch between a temporal three-pattern and a non-temporal (continuous) pattern.

9. Shall produce a nominal sound output of 79 dBA at 10'-0"

10. Shall produce a maximum sound output of 87 dBA at 10'-0"

11. A silence feature.

12. Have the ability of an accelerated silence test feature.

13. Shall be plug-in type.

14. Shall terminate at a universal mounting plate.

15. Shall be backward compatible.

D. The Mini-Horn Only Appliance rated decibel output shall be de-rated by 6 decibels each time the distance is doubled as follows:

1. At a distance of 10'-0" from sounder: Rated dB Output.

2. At a distance of 20'-0" from sounder: Rated dB Output less 6 dB.

3. At a distance of 40'-0" from sounder: Rated dB Output less 12 dB.

E. Mini-Horn Only Appliances installed in interior climate-controlled spaces shall have an operating temperature between 32°F and 120°F.

F. If the Mini-Horn Only Appliances are not UL 9th edition listed with the corresponding panel or power supply being used, then refer to the compatibility listing of the panel to determine maximum devices on a circuit.

G. Provide anti-ligature guards for Mini-Horn Only Appliances installed in Gymnasiums, Multi-Purpose Rooms, Play Areas, Play Sheds, patient rooms or in areas subject to mechanical damage.

2.27 COMBINATION HORN / STROBE APPLIANCES

A. Combination Horn / Strobe Appliances shall be listed to UL #464 "Standard for Audible Signal Appliances", UL #1638 "Standard for Visual Signaling Appliances - Private Mode Emergency and General Utility Signaling", UL #1971 “Standard for Signaling Devices for the Hearing Impaired", shall be approved for fire protective service, and be compatible with the Fire Alarm System Control Panel.

B. Combination Horn / Strobe Appliances shall be Intelligent, Analog, and Addressable that shall connect to the Fire Alarm System Control Panel's Notification Appliance Circuits (NAC) or Signaling Line Circuits (SLC).

C. The Horn Appliance shall be powered independently of the Strobe Appliance on a coded or non-coded power supply.

D. Combination Horn / Strobe Appliances shall have the following characteristics:

1. Shall be 24 Volts D.C.

2. Be installed on the ceiling or on the wall.

3. Shall be red or white finished.

4. Tamper resistant construction.

5. Shall have three (3) audibility options and an option to switch between a temporal three-pattern and a non-temporal (continuous) pattern.

6. Shall produce a nominal sound output of 82 dBA at 10'-0"

7. Shall produce a maximum sound output of 90 dBA at 10'-0".

8. Shall flash at a rate of one flash per second at 1Hz over the strobes entire operating voltage.

9. Shall be xenon / Zenon flash tube type.

10. Associated lens/reflector system shall be rated at a minimum of 15 candela and meet or exceed the requirements of the Americans with Disabilities Act (ADA).

11. Shall have field selectable candela settings.

12. Shall be plug-in type.

13. Shall terminate at a universal mounting plate.

14. Shall be backward compatible.

E. The Combination Horn / Strobe Appliance rated decibel output shall be de-rated by 6 decibels each time the distance is doubled as follows:

1. At a distance of 10'-0" from sounder: Rated dB Output.

2. At a distance of 20'-0" from sounder: Rated dB Output less 6 dB.

3. At a distance of 40'-0" from sounder: Rated dB Output less 12 dB.

F. Combination Horn / Strobe Appliances installed in interior climate-controlled spaces shall have an operating temperature between 32°F and 120°F.

G. Weatherproof Combination Horn / Strobe Appliances installed outdoors or in spaces of high humidity shall have the following characteristics:

1. Shall be listed for outdoor use by UL.

2. Shall have an operating temperature between -40°F and 151°F.

3. Shall be provided with an outdoor/weatherproof back box with:

a. Conduit entries of ½" and ¾".

b. Weatherproof sealant per the manufacturer's recommendations to prevent moisture from entering the structure.

H. If the Combination Horn / Strobe Appliances are not UL 9th edition listed with the corresponding panel or power supply being used, then refer to the compatibility listing of the panel to determine maximum devices on a circuit.

I. Provide anti-ligature guards for Combination Horn / Strobe Appliances installed in Gymnasiums, Multi-Purpose Rooms, Play Areas, Play Sheds, or in areas subject to mechanical damage.

2.28 COMBINATION LOW FREQUENCY HORN/ STROBE APPLIANCES

A. Combination Low Frequency Sounder / Strobe Appliances shall be listed to UL #464 "Standard for Audible Signal Appliances", UL #1971 “Standard for Signaling Devices for the Hearing Impaired", N.F.P.A. #72, shall be approved for fire protective service, and be compatible with the Fire Alarm System Control Panel.

B. Combination Low Frequency Sounder / Strobe Appliances shall be Intelligent, Analog, and Addressable that shall connect to the Fire Alarm System Control Panel's Notification Appliance Circuits (NAC) or Signaling Line Circuits (SLC).

C. Combination Low Frequency Sounder / Strobe Appliances shall be wired as a primary signaling notification appliance and comply with the Americans with Disabilities Act requirements for visible signaling appliances.

D. Combination Low Frequency Sounder / Strobe Appliances shall have the following characteristics:

1. Shall be 24 Volts D.C.

2. Be installed on the ceiling or on the wall.

3. Shall be red or white finished.

4. Tamper resistant construction.

5. Frequency range of 520 Hz ±10% square wave tone.

6. Permanent marking on the housing that reads "Low Frequency Sounder".

7. Shall have three (3) audibility options and an option to switch between a temporal three-pattern and a non-temporal (continuous) pattern.

8. Shall produce a nominal sound output of 76 dBA at 10'-0"

9. Shall produce a maximum sound output of 80 dBA at 10'-0".

10. Shall flash at a rate of one flash per second at 1Hz over the strobes entire operating voltage.

11. Shall be xenon / Zenon flash tube type.

12. Associated lens/reflector system shall be rated at a minimum of 15 candela and meet or exceed the requirements of the Americans with Disabilities Act (ADA).

13. Shall have field selectable candela settings.

14. Shall be plug-in type.

15. Shall terminate at a universal mounting plate.

E. The Combination Low Frequency Sounder / Strobe Appliance rated decibel output shall be de-rated by 6 decibels each time the distance is doubled as follows:

1. At a distance of 10'-0" from sounder: Rated dB Output.

2. At a distance of 20'-0" from sounder: Rated dB Output less 6 dB.

3. At a distance of 40'-0" from sounder: Rated dB Output less 12 dB.

F. Combination Low Frequency Sounder / Strobe Appliances installed in interior climate-controlled spaces shall have an operating temperature between 32°F and 120°F.

G. If the Combination Low Frequency Sounder / Strobe Appliances are not UL 9th edition listed with the corresponding panel or power supply being used, then refer to the compatibility listing of the panel to determine maximum devices on a circuit.

2.29 DAMAGE STOPPERS (WIRE GUARDS)

A. The Damage Stopper (Wire Guard) shall be UL Listed to U.S. safety standards for use with specific Fire Alarm System devices.

B. Damage Stoppers (Wire Guards) shall be provided where Fire Alarm System devices (i.e. Strobes, Horns, Smoke Detectors, Heat Detectors, Beam Detectors, Manual Pull Stations, etc.) are subject to vandalism or damage due to flying objects (i.e. Gymnasiums, Multi-Purpose Rooms, Play Areas, etc.)

C. Provide Cold-Rolled Steel Damage Stoppers (Wire Guards) with a white finished coating to protect Fire Alarm System devices from vandalism or accidental damage in spaces indicated on the contract documents.

D. The Damage Stopper (Wire Guard) shall be fabricated from 9-gauge cold rolled steel with a white corrosion-resistant polyester coating.

E. The Detector Damage Stopper (Wire Guard) shall be available for flush mount or with a spacer for surface mounted applications.

F. Detector Damage Stopper (Wire Guard) shall include (4) stainless steel tamper resistant #8 X 2" snake eye fasteners for added protection against vandalism or accidental damage.

G. Detector Damage Stopper (Wire Guard) shall be provided with an easy means of installation and removal of the Damage Stopper (Wire Guard) to facilitate servicing of smoke detector.

H. Provide Damage Stopper (Wire Guard) with conduit spacers for mounting over surface mounted Fire Alarm System devices, with or without conduit.

2.30 ANTI-LIGATURE GUARDS

A. Provide anti-ligature guards to protect the devices from damage. Anti-ligature guards do not affect the performance of the device. Anti-ligature guards shall be provided on all devices in all wards and all patient rooms. All device guards shall be anti-ligature.

2.31 GRAPHIC MAPS

A. Provide a full color graphical representation of the floor plan(s) that shall be installed directly adjacent to each Fire Alarm Remote Annunciator Panel and by the Fire Alarm System Control Panel.

B. Graphic maps shall be produced and manufactured by a professional graphic map company. Suggested retailer is H.R. Kirkland or equivalent.

C. Graphic Maps shall be a minimum of 11"x17" in size, but shall be based upon the actual building footprint with all text being **at least a 1/8" scale.**

D. Graphic Maps shall include the following information at a minimum:

1. Building Name(s) (and numbers where applicable). The text shall be **black in color** and ½" Scale.

2. Room Names and Numbers. **Blue Bold ¼" Text**

3. Doors

4. Location of the Fire Alarm Remote Annunciator Panel. **Red in Color**

5. Location of the Fire Alarm System Control Panel. **Red in Color**

6. End-of-Line resistor locations (Class "B" circuits only)

7. A "You Are Here" with an arrow pointing at the wall or area location of where Graphic Map is to be installed. **Red Text**

8. Show the system(s) being monitored by the Fire Alarm System.

9. Provide a System Legend at the top of each Graphic Map indicating all initiation device types and the following applicable systems

   a. Fire Protection Sprinkler System Post Indicator Valve(s)

   b. Fire Protection Sprinkler System Water Flow Switch(s)

   c. Fire Protection Sprinkler System Tamper Switch(s)

d. Fire Protection Sprinkler System Pressure Switch(s)

e. Fire extinguisher cabinet

f. Other systems that would typically interface to the Fire Alarm System.

10. "North" arrow **Black in Color**

11. Provide the image/logo and name of the Owner at the top of each Graphic Map.

E. Each Graphic Map shall have all the initiation devices shown in red color at their locations with the device address in green color.

1. Manual Pull Stations

2. Smoke Detectors

3. Heat Detectors

4. Duct Detectors

5. Beam Detectors

6. Kitchen Hood System

7. Carbon Monoxide Detectors

8. Control Relays

9. Sprinkler Waterflow Switches

F. The room numbering system depicted on each Graphic Map shall match that of the final signage and room identification system adopted by the Owner. These shall be larger than the device addresses. This text shall be **¼" and Blue in Color**

G. For Multi-Story Buildings:

1. The bottom of each Graphic Map shall be the lowest level of the building.

2. The top of each Graphic Map shall be the highest level of the building.

H. Graphic Maps shall be secured in a black anodized aluminum frame. The map shall be non-fading and non-pealing

I. Graphic Maps installed on the interior of the building shall consist of the following;

1. Printed on the reverse side of 10 mil polycarbonate Lexan.

2. Standard background shall be white.

3. The Lexan image shall mount to a rigid 1/8" substrate with removable adhesive mounts.

4. The Graphic Map shall be secured to a black anodized aluminum frame.

5. Provide Graphic Map with a concealed security hanging system to prevent unauthorized removal.

J. Graphic Maps installed on the exterior of the building shall consist of the following:

1. Printed on 1/8" silver brushed aluminum, white aluminum, or stainless steel.

2. The Graphic Map shall be designed to attach to an exterior wall by a screw located in each of the four corners.

3. The Graphic Map shall be non-fading and non-pealing.

2.32 MONITOR MODULES

A. Monitor Modules shall be listed to UL #864 "Standard for Control Units and Accessories for Fire Alarm Systems" and shall be approved for fire protection service.

B. Provide an addressable Monitor Module to supervise a circuit of dry contact input devices.

C. Monitor Modules shall have built-in type identification that automatically identifies the devices as a Monitor Module to the Fire Alarm System Control Panel.

D. Monitor Modules shall be powered by the Fire Alarm System Signaling Line Circuit (SLC).

E. Monitor Modules shall be capable of providing a minimum of 5 input circuits.

F. Monitor Modules shall have a Light Emitting Diode (LED) that is controlled by the Fire Alarm System Control Panel to indicate module status.

G. Monitor Modules shall monitor Alarm, Trouble, and Supervisory outputs for the following Specialty Systems:

1. Pre-Action System

2. Deluge System

3. Clean Agent Suppression System

4. Hood Suppression System

5. Other systems that would typically interface to the Fire Alarm System.

2.33 RELAY MODULES

A. Relay Modules shall be listed to UL #864 "Standard for Control Units and Accessories for Fire Alarm Systems" and shall be approved for fire protection service.

B. Relay Modules shall allow a compatible Fire Alarm System Control Panel to switch discrete contacts by coded command.

C. The Relay Module shall provide (2) two isolated sets of "Form C" contacts, which operate as a Double Pole Double Throw (DPDT) switch rated at up to:

1. 1 Amp at 30 Volts D.C. of inductive load.

2. 2 Amps at 30 Volts D.C. (coded) of resistive load.

3. 3 Amps at 30 Volts D.C. for non-coded applications.

D. The Relay Module shall allow the Fire Alarm System Control Panel to switch the "Form C" contacts upon command.

E. The Relay Module shall not provide supervision of the Notification Appliance Circuit (NAC).

F. Relay Modules shall have both normally open and normally closed connections available for field cabling.

G. Addressable Relay Modules shall be provided for the following:

1. Audio/Visual Sound Systems

2. Duct Smoke Detectors

3. H.V.A.C. Systems

4. Magnetic Door Holders

5. Magnetic Door Releases

6. Fire Rated Coiling Doors

7. Fire Rated Shutters

8. Won Doors

9. Smoke Vents

10. Other building functions.

H. The relay coil shall be magnetically latched to reduce cabling connection requirements, and to ensure that 100% of all auxiliary devices energize at the same time on the same pair of cables.

I. Relay Modules shall have a Light Emitting Diode (LED) that is controlled by the Fire Alarm System Control Panel to indicate module status.

J. Coded signals, transmitted from the Fire Alarm System Control Panel, can cause the Light Emitting Diode (LED) to blink, latch on, or latch off.

2.34 MULTI-VOLTAGE RELAY MODULES (RELAY IN BOX)

A. Multi-Voltage Relay Modules shall be listed to UL #864 "Standard for Control Units and Accessories for Fire Alarm Systems" and shall be approved for fire protection service.

B. Multi-Voltage Relay Modules shall allow a compatible Fire Alarm System Control Panel to switch discrete contacts by coded command.

C. Multi-Voltage Relay Modules shall be used for high-current switching applications such as fan and damper assembly control, door control, air handling unit controls, and other types of system interfacing.

D. Multi-Voltage Relay Modules shall have (1) one "Form C" contact which operate as a Single Pole Double Throw (SPDT) relay with a red activation Light Emitting Diode (LED).

E. Multi-Voltage Relay Modules shall be mounted into a steel enclosure that has a removable front cover to provide easy access with a Light Emitting Diode (LED) viewing hole.

F. The Multi-Voltage Relay Module shall allow the Fire Alarm System Control Panel to switch the "Form C" contact upon command.

G. The Multi-Voltage Relay Module shall not provide supervision of the Notification Appliance Circuit (NAC).

H. Multi-Voltage Relay Modules shall have both normally open and normally closed connections available for field cabling.

I. Multi-Voltage Relay Modules shall be capable of operating on a 24 Volts D.C., 120 Volts A.C., or 240 Volts A.C. power source.

J. Multi-Voltage Relay Modules shall have a Light Emitting Diode (LED) that is controlled by the Fire Alarm System Control Panel to indicate module status.

K. Coded signals, transmitted from the Fire Alarm System Control Panel, can cause the Light Emitting Diode (LED) to blink, latch on, or latch off.

2.35 CONTROL MODULES

A. Control Modules shall be listed to UL #864 "Standard for Control Units and Accessories for Fire Alarm Systems" and shall be approved for fire protection service.

B. Power for the Control Module shall be provided by the 24 Volts D.C. Signaling Line Circuit (SLC) loop to reduce cabling connection requirements.

C. Control Modules shall be capable of Class "A B" operation.

D. Addressable Control Modules shall be activated through Fire Alarm System Control Panel programming on a select basis (zone or area of coverage).

E. Upon programming command from the Fire Alarm System Control Panel, the Control Module shall disconnect the supervision and connect the external power supply in the proper polarity across the load device.

F. The disconnection of the supervision shall provide a positive indication to the Fire Alarm System Control Panel that the Control Nodule has turned "On".

G. The external power supply shall always be Control Module isolated from the communication loop so that a trouble condition on the external power supply will never interfere with the rest of the system.

H. Control Modules shall have a Light Emitting Diode (LED) that is controlled by the Fire Alarm System Control Panel to indicate module status.

2.36 ZONE INTERFACE MODULES

A. Zone Interface Modules shall be listed to UL #864 "Standard for Control Units and Accessories for Fire Alarm Systems" and shall be approved for fire protection service.

B. Zone Interface Modules shall be capable of Class "A B" operation.

C. Zone Interface Modules shall provide an interface between the intelligent alarm system and a two-wire conventional detection zone.

D. A common Signaling Line Circuit (SLC) input is used for all Zone Interface Modules, and the initiating device circuits share a common external supervisory supply and ground. Otherwise, each Zone Interface Module operates independently from the others.

E. All two-wire detectors being monitored must be two-wire compatibility listed with the Zone Interface Modules.

F. The Zone Interface Module transmits the status of a zone of two-wire detectors to the Fire Alarm System Control Panel. Status conditions are reported as Normal, Open, or Alarm.

G. The Zone Interface Module supervises the zone of detectors and the connection of the external power supply.

H. Zone Interface Modules shall have Light Emitting Diodes (LEDs) that are controlled by the Fire Alarm System Control Panel to indicate module status.

I. Coded signals, transmitted from the Fire Alarm System Control Panel, can cause the Light Emitting Diodes (LEDs) to blink, latch on, or latch off.

2.37 ISOLATION MODULES

A. Isolation Modules shall be listed to UL #864 "Standard for Control Units and Accessories for Fire Alarm Systems" and shall be approved for fire protection service.

B. Isolation Modules shall be provided to automatically isolate wire-to-wire short circuits on Signaling Line Circuit (SLC) loops.

C. A maximum of 20 devices shall be provided between Isolation Modules on the Signaling Line Circuit (SLC) loop and limits the number of modules or detectors that may be rendered inoperative by a short circuit fault on the Signaling Line Circuit (SLC) Loop.

D. If a wire-to-wire short occurs, the Isolation Module shall automatically open-circuit (disconnect) the Signaling Line Circuit (SLC) loop and prevent the short from causing failure of the entire Signaling Line Circuit (SLC) loop.

E. When the short circuit condition is corrected, the Isolation Module shall automatically reconnect the isolated section of the Signaling Line Circuit (SLC) loop.

F. The Isolation Module shall not require any address-setting, and its operations shall be totally automatic.

G. It shall not be necessary to replace or reset an Isolation Module after its normal operation.

H. The Isolation Module shall mount in a standard 4" deep electrical box, in a surface-mounted back box, or in the Fire Alarm System Control Panel.

I. The Isolation Module shall have a single Light Emitting Diode (LED) which shall flash to indicate that the Isolator Module is operational and shall illuminate steadily to indicate that a short circuit condition has been detected and isolated.

2.38 REMOTE INDICATING LAMPS

A. The Remote Indicating Lamp shall provide status indication by a single RED Light Emitting Diode (LED),

B. The RED-Light Emitting Diode (LED) shall be mounted on a single gang plate.

C. Provide label on plate indicting device designation in concealed space above.

2.39 MAGNETIC DOOR HOLDERS

A. Magnetic Door Holders shall be listed to UL #228 "Standard for Door Closers-Holders, With or Without Integral Smoke Detectors" and shall be approved for fire protection service.

B. Magnetic Door Holders shall consist of both an electromagnet and an armature assembly.

C. Magnetic Door Holders shall be rated for continuous duty and operate using a 24 Volts D.C. 120 Volts A.C. power source.

D. Activation of the Fire Alarm System shall automatically release the Magnetic Door Holders allowing the fire rated doors to close and shall remain in the release mode until the Fire Alarm System Control Panel is reset.

2.40 MAGNETIC DOOR LOCKS

A. Magnetic Door Locks shall be listed to UL #228 "Standard for Door Closers-Holders, With or Without Integral Smoke Detectors" and shall be approved for fire protection service.

B. Magnetic Door Locks shall consist of both an electromagnet and an armature assembly.

C. Magnetic Door Locks shall be rated for continuous duty and operate using a 24 Volts D.C. 120 Volts A.C. power source.

D. Activation of the Fire Alarm System shall automatically release the Magnetic Door Locks unlocking the doors and shall remain in the release mode until the Fire Alarm System Control Panel is reset.

2.41 SYSTEMS PLYWOOD BACKBOARD(S)

A. Plywood Backboard shall be used to mount all Fire Alarm System enclosures to any wall or surface, even if wall is concrete or CMU.

B. Mounting of equipment shall be logically placed, and shall be located to accommodate future growth of the Fire Alarm System.

C. The Systems Plywood Backboard shall be securely fastened to the wall to accommodate no less than ten times the total weight of the equipment to be mounted or 150 pounds, whichever is greater.

D. The Systems Plywood Backboard shall be a minimum of 3/4", APA exterior grade Douglas Fir A-C that is fire retardant having a flame spread rating not more than 25 when tested in accordance with ASTM E-84.

E. Provide Systems Plywood Backboard from 1'-0" above finished floor up to the ceiling height or 10'-0", whichever is lower.

F. The entire backboard shall be painted with three (3) coats of fire-retardant paint (the color shall match the adjacent surface).

2.42 UNIVERSAL DIGITAL ALARM COMMUNICATOR TRANSMITTER (UDACT)

A. The Universal Digital Alarm Communicating Transmitter (UDACT) shall be listed to UL #827 "Standard for Central Station Alarm Services", UL #1981 "Standard for Central Station Automatic Systems" and shall be approved for fire protection service.

B. The Universal Digital Alarm Communicating Transmitter (UDACT) is an interface for communicating digital information between a Fire Alarm System Control Panel and central station monitoring company.

C. Cabling connections between the Universal Digital Communicator Transmitter (UDACT) and the Fire Alarm System Control Panel shall be supervised with one pair of cabling for power and one pair of cabling for multiplexed communication of overall system status.

D. The Universal Digital Communicator Transmitter (UDACT) shall include the following:

1. Compact in size and mounted in a standard module position of the Fire Alarm System Control Panel.

2. Connections for dual telephone lines with voltage detect.

3. The ability for split reporting events up to three different telephone numbers.

4. Capable of transmitting events in at least 15 different formats to ensure compatibility with existing and future transmission formats.

5. Completely field programmable from a built-in keypad with a 4-character, seven segment displays.

6. Support independent zone/point reporting when used in contact ID format.

7. Support transmission of up to 2,040 points to the central station monitoring company.

8. Have the ability for mounting at distances of up to 6,000 feet from the Fire Alarm System Control Panel.

E. The Universal Digital Communicator Transmitter (UDACT) shall communicate the following vital system information:

1. Independent zone (alarm, trouble and supervisory)

2. Independent addressable device status

3. AC power loss

4. Low battery (DC power)

5. Earth fault

6. System off normal

7. 12 and 24-hour test signal

8. Abnormal test signal (per UL requirements)

9. EIA-485 communication failure

10. Phone line failure

F. An IP Communicator option shall be available to interface to the Universal Digital Communicator Transmitter (UDACT) and be capable of transmitting signals over the internet/intranet to a compatible receiver.

2.43 AES WIRELESS TRANSCEIVER

A. AES Wireless Transceiver shall be listed to UL #365 " Standard for Police Station Connected Burglar Alarm Units and Systems", UL #864 "Commercial Fire Alarm Requirements for Primary Standalone Communication", UL #1681 "Standard for Wiring Device Configurations" and meet N.F.P.A. #72 requirements.

B. The AES Wireless Transceiver (AES 7788F-ULP) shall provide a wireless communication link between the Fire Alarm System Control Panel and the central station monitoring company receiver via telephone lines connected to the Universal Digital Communicator Transmitter (UDACT).

C. The AES Wireless Transceiver shall be capable of supporting Alarm, Supervisory, and Trouble signals from the Fire Alarm System Control Panel and shall be able to monitor telephone lines, antenna cuts, battery status, and AC power status.

D. The standard frequency range of the AES Wireless Transceiver shall be 450-470 MHz and shall be narrow band compliant.

E. The AES Wireless Transceiver shall be provided within a full-sized rugged metal enclosure.

F. The Fire Alarm System Contractor shall confirm radio signal strength and provide appropriate antenna.

G. Exterior antenna installations shall require all exterior building penetrations to be sealed.

2.44 ANTENNAS

A. Antennas shall be omnidirectional coaxial halfwave dipole type for radio transmitters with a driving point impedance to match transmitter output.

B. VHF Antennas provide transmission and reception of the VHF RF signals between the radio Transmitter and the Radio Frequency Modem that is connected to the Radio Central Receiving System.

C. The antenna and antenna mounts shall be corrosion resistant and designed to withstand wind velocities up to 100 m.p.h.

D. Do not mount antennas to any portion of the building roofing system.

E. Protect the antenna from physical damage.

F. The Antenna shall be provided with a Lightning Arrestor to drain static charges from the antenna system.

G. The Lightning Arrestor shall allow direct earth ground connection in accordance with N.F.P.A. #70 Section 810-21 while preventing are energy from being coupled to the equipment through the coaxial shields.

H. The use of enlarged coaxial cabling shall require Voltage Drop Calculations.

2.45 TRANSIENT VOLTAGE SURGE PROTECTION

A. If not provided as an integral part of the Fire Alarm System power supply, an external means of Transient Voltage Surge Protection shall be provided for all components of the system.

B. The means of Transient Voltage Surge Protection shall be listed to UL #497A "Standard for Secondary Protectors for Communications Circuits", UL #1283 "Standard for Electromagnetic Interference Filters", UL #1449 "Standard for Surge Protective Devices", and shall be approved for fire protection service.

C. All circuits shall be provided with transient suppression devices and the system shall be designed to permit simultaneous operation of all circuits without interference or loss of signals.

D. Transient Voltage Surge Protection shall have a minimum energy handling of 70 Joules on line to line, line to neutral, and line to ground spikes.

E. The response time for Transient Voltage Surge Protection shall be 5 nanoseconds or less and shall begin at 140 Volts A.C.

F. Provide one (1) dedicated Transient Voltage Surge Suppressor (TVSS) for each 120 Volts A.C. hard wired connection point.

2.46 FIRE PROTECTION SYSTEM CONNECTIONS

A. Fire Sprinkler System Connections shall be listed to UL #346 "Standard for Waterflow Indicators for Fire Protective Signaling Systems", UL #864 "Standard for Control Units and Accessories for Fire Alarm Systems" and shall be approved for fire protection service.

B. Fire Protection Sprinkler System devices shall be connected to the Fire Alarm System Control Panel so that the movement of a valve and/or switch shall notify the Fire Alarm System.

C. The Fire Protection Sprinkler Contractor shall provide and install all fire protection sprinkler system switches and/or equipment that include, but are not limited to following:

1. Post Indicator Valve (PIV) Tamper Switch(s)

2. Tamper Switch(s)

3. Water Flow Switch(s)

4. Pressure Switch(s)

5. Fire Pump Controller(s)

6. Clean Agent Suppression System Control Panel(s)

7. Cooking Hood Fire Suppression System Control panel(s)

8. Other systems that would typically interface to the Fire Alarm System

D. The Fire Alarm System Contractor / Electrical Contractor shall provide and install the conduit, junction boxes, couplers, connectors, cabling, terminations, and the necessary Fire Alarm System equipment to monitor and/or power the fire sprinkler system switches and equipment.

E. Each fire protection sprinkler system tamper switch shall be provided with a Monitor Module by the Fire Alarm System Contractor.

F. Fire protection sprinkler system tamper switches on the valve controlling the backflow preventer full forward flow test piping shall be connected to the Fire Alarm System Control Panel such that the movement of a valve from the normally closed position shall initiate a supervisory signal.

G. Fire protection sprinkler system tamper switches on all other valves except for the valve controlling the backflow preventer full forward flow test piping shall be connected to the Fire Alarm System Control Panel such that the movement of a valve from the normally open position shall initiate a supervisory signal.

H. The Fire Alarm System Contractor shall coordinate locations and quantities of Fire Protection Sprinkler System devices with the Fire Protection Sprinkler System Contractor.

I. Fire Protection Sprinkler System Electric Alarm Bell

1. The Fire Protection Sprinkler System Contractor shall provide an electric alarm bell.

2. The Fire Protection system electric alarm bell shall operate on a 120 Volts A.C. power supply.

3. The Fire Protection system electric alarm bell shall operate on a 24 Volts D.C. power supply that I shall be powered by the Fire Alarm System Control Panel allowing the electric bell to be on a back-up power supply.

4. The Fire Alarm System Contractor / Electrical Contractor shall connect the sprinkler system electric alarm bell to the Fire Alarm system Control Panel.

5. Coordinate installation location of the electric alarm bell with the Fire Protection Sprinkler System Contractor.

6. The sprinkler system electric alarm bell shall activate upon the flow of water past the water flow switch or pressure switch only.

7. The sprinkler system electric alarm bell shall be silenced upon the flow of water past the water flow switch or pressure switch terminating and water flow switch or pressure switch returning to a "Normal" condition.

2.47 FAN / DAMPER CONTROL CIRCUITS

A. Fan shutdown control circuits and smoke removal circuits shall be electrically supervised per N.F.P.A. #72 requirements.

B. Provide a single "Form C" isolated contact output and cabling from the Fire Alarm System to the Energy Management Control System (EMCS).

C. Provide a second isolated contact for automatic closure of smoke dampers and combination smoke / fire dampers.

D. Upon activation of a general "Alarm" condition in the area in which the smoke damper or combination fire / smoke damper is located, the smoke damper or combination fire / smoke damper shall automatically close and the mechanical equipment shall be disabled.

E. Provide all necessary connections, programming and testing for the shutdown of affected mechanical equipment.

F. Power supply for damper actuators shall be provided by the Electrical Contractor.

G. Fusible link style dampers shall not be connected to the Fire Alarm System.

2.48 AUTOMATIC SMOKE VENT CONNECTIONS

A. In locations indicated on the contract documents, provide a Control Module for connection between Fire Alarm System Control Panel and the Automatic Smoke Vent.

B. Automatic Smoke Vents shall be activated by manual means, a fusible link, and by automatic release thru the Fire Alarm System Control Panel.

C. The 24 Volts D.C. Automatic Smoke Vent release mechanism shall be normally de-energized and energized upon a signal from the Fire Alarm System Control Panel.

D. Provide manual override control station, if required by the Authority Having Jurisdiction.

E. Coordinate Automatic Smoke Vent requirements with the General Contractor and Electrical contractor.

2.49 WIREMOLD SURFACE RACEWAY

A. Wiremold Surface Raceway shall be meet the requirements of Underwriters Laboratories Inc. and conform to U.S. Federal Specification W-C-582.

B. Wiremold Surface Raceway shall be in accordance with N.F.P.A. #70, local requirements, and state requirements.

C. Wiremold Surface Raceway shall be constructed of steel with a minimum thickness of 0.040".

D. Wiremold Surface Raceway shall have the following features:

1. Rugged steel raceway.

2. Low-profile and unobtrusive appearance.

3. Base and cover are preassembled as a one-piece unit

4. Surface mounting

5. Full line of fittings

6. Fittings have removable covers

7. UL #5 "Standard for Surface Metal Raceways and Fittings" and ADA compliant.

2.50 WET RATED CABLES

A. Wet Rated Cables shall have a flame rating that meet UL #1685 "Standard for Vertical-Tray Fire-Propagation and Smoke-Release Test for Electrical and Optical-Fiber Cables" requirements.

B. Wet Rated Cables shall be Type FPL, PLTC, or CL3 cables that meet the 300 Volt requirements as specified in N.F.P.A. #70.

C. Wet Rated Cables shall be rated for "Direct Burial" or "Underground in Conduit" installations.

1. "Direct Burial" rated cables shall consist of the following:

   a. ASTM Bare Copper

   b. PVC Insulation with Nylon

   c. Twisted Pair or Cabled Construction

   d. Overall Shield 100% Coverage of Aluminum Polyester Foil with Drain Wire

   e. Water Blocked Construction

   f. Overall Sunlight / Moisture Resistant PVC Jacket

2. "Underground in Conduit" rated cables shall consist of the following:

   a. ASTM Bare Copper

   b. PVC Insulation

   c. Short Twisted Construction

   d. Unshielded

   e. Water Blocked Construction

f. Overall Sunlight / Moisture Resistant PVC Jacket

PART 3 - SYSTEM OPERATION

3.01 FIRE ALARM SYSTEM CIRCUITS

A. Circuits capable of transmitting an "Alarm" signal during a single open or ground fault, provided they do not occur simultaneously, are designed as Class A. In terms of an actual wiring configuration, this circuit typically consists of a pair of wires running from the control panel out through the hazard area, and returning in a continuous loop back to the control panel where they are terminated.

B. Circuits not capable of transmitting an "Alarm" signal beyond the location of the open or ground fault as specified above, are designated Class B. Class B circuits generally do not return to the control panel but are terminated by an end-of-line device remote from the control panel.

C. Class A Circuits shall not cause system malfunction, loss of operating power, or the ability to report an alarm upon a single ground fault or open circuit on the system Signaling Line Circuit (SLC).

D. Alarm signals arriving at the Fire Alarm System Control Panel shall not be lost following a primary power failure (or outage) until the alarm signal is processed and recorded.

E. Notification Appliance Circuit (NAC) circuits shall be arranged such that there is a minimum of one horn circuit per floor of the building or smoke zone whichever is greater, but not more than 25 devices per circuit.

F. Notification Appliance Circuit (NAC) circuits and control equipment shall be arranged such that loss of any one (1) Horn circuit will not cause the loss of any other horn circuit in the system.

3.02 FIRE ALARM SYSTEM OPERATION

A. When a Fire Alarm System "Alarm" condition is detected and reported by one of the systems initiating devices, the following functions shall immediately occur:

1. The system alarm LED shall flash.

2. A local piezo-electric audible device in the control panel shall sound a distinctive signal.

3. The backlit LCD display shall indicate all information associated with the "Alarm" condition, including:

a. Type of "Alarm" point.

b. Location of "Alarm" point within the protected premises.

c. Time of the "Alarm" condition

d. Date of the "Alarm" condition

4. Display the device location unique nomenclature (for each addressable and non-addressable point in the system) on the Fire Alarm System Control Panel Display and at each Fire Alarm System Remote Annunciator Panel Display.

   a. All points of identification shall clearly indicate the following:

      1) Device Type

      2) Room Name

      3) Room Number

      4) Location of device in the room.

5. The system "Alarm" Light Emitting Diode (LED) on the system display shall flash.

6. A local piezo electric signal in the control panel shall sound.

7. Activate all notification appliances.

8. Upon the flow of water through the fire protection sprinkler system only, activate the 24 Volts D.C. Fire Protection Sprinkler System electric bell.

9. All horns and strobes shall be synchronized throughout the facility, and meet or exceed all ADA requirements.

10. All Notification devices shall operate continuously until the Fire Alarm System Control Panel has been "Silenced".

11. Initiate signal to the remote central station monitoring station.

12. Magnetic door holders shall release self-closing fire and smoke doors (where applicable).

13. "Alarm" signals shall be annunciated by point and zone at the control panel.

14. All H.V.A.C. air handling unit of 2,000 CFM or larger shall be shutdown.

15. Visual notification appliances shall be controlled independently from audible notification appliances.

16. Upon system silence, visual notification appliances shall continue to operate until system reset is provided.

17. Alarm circuits shall remain energized and the zone annunciation LED will continue to flash until the acknowledge switch is operated at which time the audible notification appliances will be de-energized.

18. Should an "Alarm" condition be initiated in a subsequent zone after an "Alarm" condition has been acknowledged, the "Alarm" condition shall be re-energized.

19. Printing and history storage equipment shall log and print the event information along with a time and date stamp.

20. All system outputs assigned via control-by-event equations for a particular point in "Alarm" shall be executed, and the associated system outputs ("Alarm" notification appliances and/or relays) shall be activated.

21. Unacknowledged "Alarm" conditions shall have priority over "Trouble" conditions and if an "Alarm" condition occurs during a "Trouble" condition, the "Alarm" condition will have display priority.

B. When a Fire Alarm System "Trouble" condition is detected and reported by one of the systems initiating devices or appliances, the following functions shall immediately occur:

1. The system trouble LED shall flash.

2. A local piezo-electric audible device in the control panel shall sound a distinctive signal.

3. The backlit LCD display shall indicate all information associated with the "Trouble" condition, including:

   a. Type of "Trouble" point

   b. Location of "Trouble" point within the protected premises

   c. Time of the "Trouble" condition

   d. Date of the "Trouble" condition

4. Printing and history storage equipment shall log and print the event information along with a time and date stamp.

5. All system outputs assigned via control-by-event equations for a particular point in "Trouble" shall be executed, and the associated system outputs ("Trouble" notification appliances and/or relays) shall be activated.

6. Unacknowledged "Alarm" conditions shall have priority over "Trouble" conditions and if an "Alarm" condition occurs during a "Trouble" condition, the "Alarm" condition will have display priority.

C. When a Fire Alarm System "Supervisory" condition is detected and reported by one of the systems initiating devices or appliances, the following functions shall immediately occur:

1. The system trouble LED shall flash.

2. A local piezo-electric audible device in the control panel shall sound a distinctive signal.

3. The backlit LCD display shall indicate all information associated with the "Supervisory" condition, including:

   a. Type of "Supervisory" point

   b. Location of "Supervisory" point within the protected premises

   c. Time of the "Supervisory" condition

   d. Date of the "Supervisory" condition

4. Printing and history storage equipment shall log and print the event information along with a time and date stamp.

D. When a "Pre-Alarm" condition is detected and reported by one of the systems initiating devices, the following functions shall immediately occur:

1. The system "Pre-Alarm" LED shall flash

2. A local piezo-electric audible device in the control panel shall sound a distinctive signal.

3. The backlit LCD display shall indicate all information associated with the "Pre-Alarm" condition, including:

   a. Type of "Pre-Alarm" point

   b. Location of "Pre-Alarm" point within the protected premises

   c. Time of the "Pre-Alarm" condition

   d. Date of the "Pre-Alarm" condition

4. Printing and history storage equipment shall log and print the event information along with a time and date stamp.

5. All system outputs assigned via control-by-event equations for a particular point in "Pre-Alarm" shall be executed, and the associated system outputs ("Pre-Alarm" notification appliances and/or relays) shall be activated.

E. When a Fire Alarm System event is activated by selecting one of the pre-recorded messages or by use of the microphone for live voice announcements, the following functions shall immediately occur:

1. The system visual notification appliances shall be activated throughout the building.

2. All strobes shall be synchronized throughout the facility and meet or exceed all ADA requirements.

3. All notification devices shall operate continually until the Fire Alarm System Control Panel has been "Silenced".

F. System Point Operations:

1. Any addressable device or conventional circuit in the system may be enabled or disabled through the system keypad.

2. System output points shall be capable of being turned on or off through the system keypad.

G. Point Read:

1. The system shall be able to display the following point status diagnostic functions without the need for peripheral equipment. Each point shall be annunciated for the parameters listed:

a. Device Status

b. Device Type

c. Custom Device Label

d. Software Zone Label

e. Device Zone Assignments

f. Analog Detector Sensitivity

g. All Program Parameters

H. System History Recording and Reporting:

1. The Fire Alarm Control Panel shall contain a history buffer that will be capable of storing up to 4,000 system events.

2. Up to 1,000 events shall be dedicated to alarm and the remaining events are general purpose.

3. Systems that do not have dedicated "Alarm" storage and allow "Alarm" events are overridden by non-alarm type events, are not allowed.

4. Each of these activations will be stored along with a time and date stamp with the actual time of the activation.

5. The contents of the history buffer may be manually reviewed (one event at a time) or printed in its entirety.

6. History events shall include all "Alarm" conditions, "Trouble" conditions, Operator Actions, and programming entries.

7. The history buffer shall use non-volatile memory.

8. Systems that use volatile memory for history storage are not acceptable.

I. Programmable Trouble Reminder:

1. The system shall provide means to automatically initiate a reminder that troubles exist in the system.

2. The reminder will appear on the system display and (if enabled) will sound a piezo alarm.

J. Environmental Drift Compensation:

1. The system shall provide means for setting Environmental Drift Compensation by device.

2. Drift compensation shall also include a smoothing algorithm feature, allowing transient noise signals to be filtered out.

3. Provide two levels of alert to warn of excessive smoke detector dirt or dust accumulation.

a. Maintenance Alert: When a detector accumulates dust in the chamber and reaches an unacceptable level but yet still below the allowed limit.

b. Maintenance Urgent: When the detector accumulates dust in the chamber above the allowed limit.

K. Automatic Detector Maintenance Alert:

1. The Fire Alarm System Control Panel shall automatically interrogate each intelligent detector and shall analyze the detector responses over a period of time.

2. If any intelligent detector in the system responds with a reading which is below 20% of normal limits (for 5 out of 6 polls), or above 80% of normal limits for a period of 26 hours, then, then the system will enter the "Trouble" mode and the particular Intelligent Detector will be annunciated on the System Display and printed on the optional System Printer.

3. This feature shall in no way inhibit the receipt of alarm conditions in the system, nor shall it require any special hardware, special tools, or computer expertise to perform.

L. Smoke Detector Pre-Alarm Indication at Control Panel:

1. To obtain early warning of incipient or potential fire conditions, the Fire Alarm System shall support a programmable option to determine system response to real-time detector sensing values above the programmed setting.

2. Two levels of Pre-alarm indication shall be available at the control panel: alert and action.

a. Alert Level:

1) It shall be possible to set individual smoke detectors for pre-programmed "Pre-Alarm" thresholds.

2) If the individual threshold is reached, the "Pre-Alarm" condition shall be activated.

3) This will be used to alert maintenance personal when a detector is at 80% of its alarm threshold in a 60 second period.

b. Action Level:

1) If programmed for Action and the detector reaches a level exceeding the pre-programmed level, the Fire Alarm System Control Panel shall indicate an action condition.

2) Sounder bases installed with either heat or smoke detectors shall automatically activate on action Pre-Alarm level, with general evacuation on Alarm level.

3. The system shall support a detector response time to meet world annunciation requirements of less than 3 seconds.

M. Pre-Alarm Function:

1. The system shall provide two levels of "Pre-Alarm" warning to give advance notice of a possible fire situation.

2. Both "Pre-Alarm" levels shall be fully field adjustable.

3. The first level shall give an audible indication at the control panel.

4. The second level shall give an audible indication and may also activate control relays.

5. The system shall also have the ability to activate local detector sounder bases at the "Pre-Alarm" level, to assist in avoiding nuisance alarms.

N. Pre-signal and Positive Alarm Sequence:

1. The Fire Alarm System shall provide means to cause alarm signals to only sound in specific areas with a delay of the alarm from 60 to up to 180 seconds after start of alarm processing.

2. In addition, a Positive Alarm Sequence selection shall be available that allows a 15-second time period for acknowledging an alarm signal from a fire detection/initiating device.

3. If the alarm is not acknowledged within 15 seconds, all local and remote outputs shall automatically activate immediately.

O. Elevator Interface to the Fire Alarm System:

1. Activation of a smoke detector located in any Elevator Lobby, Top of Hoistway, or Elevator Machine Room shall initiate the "Elevator Recall" feature.

a. All elevator cabs shall return to the "Primary" floor of egress when the smoke detector activated is not located on the "Primary" floor of egress.

b. All elevator cabs shall return to the "Alternate" floor of egress when the active smoke detector is located on the "Primary" floor of egress.

c. Installation of the smoke detector serving any Elevator Lobby, Top of Hoistway, or Elevator Machine Room shall be coordinated with the Electrical Contractor and Elevator Contractor.

2. The heat detector installed at the Top of Hoistway or in the Elevator Machine Room shall be a mechanical style, 135°F fixed temperature activation having dual contacts that are in the normally open position for the following features:

a. One set of contacts shall be used to monitor integrity of the circuit by the Fire Alarm System Control Panel.

b. One set of contacts shall be used to initiate the "Shunt Trip Breaker" feature in which power to the elevator is terminated and the Elevator instantaneously shut down in accordance with ANSI A17.1 requirement.

3. Installation of the heat detector serving the Top of Hoistway or Elevator Machine Room shall be coordinated with the Electrical Contractor, Elevator Contractor, and Fire Protection Sprinkler System Contractor.

3.03 SYSTEM COMMON CONTROL SWITCH OPERATION

A. Acknowledge (ACK/STEP) Switch:

1. Activation of the Fire Alarm System Control Panel Acknowledge Switch in response to a single new "Alarm" and/or "Trouble" condition shall silence the local panel piezo electric signal and change the System "Alarm" or "Trouble" Light Emitting Diode (LED) from flashing mode to steady-ON mode.

2. Depression of the Acknowledge Switch shall silence all Fire Alarm System Remote Annunciator piezo sounders.

3. Depression of the Acknowledge Switch shall cause a corresponding (time-stamped) message to be displayed on all system peripheral equipment (if used).

4. The Fire Alarm System Control Panel shall support Block Acknowledge to allow multiple trouble conditions to be acknowledged with a single depression of this switch.

5. If additional new "Alarm" or "Trouble" conditions exist or are detected and reported in the system, depression of this switch shall advance the 80-character LCD display to the next "Alarm" or "Trouble" condition.

6. In this case, the local piezo sounder shall not silence, and the "Alarm" or "Trouble" Light Emitting Diodes (LEDs) shall not transfer to their steady-on mode, thus signaling to the operator that more "Alarm" or "Trouble" conditions are present in the system.

7. "Alarm" conditions shall always have display priority before "Trouble" conditions.

8. Occurrence of any new "Alarm" or "Trouble" condition in the system shall cause the Fire Alarm System Control Panel to resound the Local Piezo sounder and repeat the "Alarm" or "Trouble" sequences.

B. Signal Silence Switch:

1. Activation of the Signal Silence Switch shall cause all programmed "Alarm" Indicating Appliances and relays to return to the normal condition after an alarm condition.

2. The selection of indicating circuits and relays which are silenceable by this switch shall be fully programmable within the confines of all applicable standards.

3. The Fire Alarm System Control Panel software shall include silence inhibit and auto-silence timers.

C. Alarm Activate (Drill) Switch:

1. The system shall support means to activate all silenceable fire output circuits in the event of a practice evacuation or "drill".

2. If enabled for local control, the front panel switch shall be held for a minimum of 2 seconds prior to activating the drill function.

3. The Alarm Activation (Drill) Switch shall activate all:

a. Local system Light Emitting Diodes (LEDs)

b. Illuminate each segment of the Liquid Crystal Display (LCD)

c. Display the panel software revision for service personnel

d. Programmed Notification Appliance Circuits (NACs)

4. The Alarm Activation (Drill) Switch shall latch until the Fire Alarm System Control Panel is "Silenced" or "Reset".

D. Walk Test:

1. The system shall provide both a basic and advanced walk test for testing the entire Fire Alarm System.

2. Basic walk Test:

a. Shall allow a single operator to run audible tests on the panel.

b. All logic equation automation shall be suspended during the test and while annunciators can be enabled for the test, all shall default to the disabled state.

3. Advanced Walk Test:

   a. Field-supplied output point programming will react to input stimuli such as CBE and logic equations.

   b. When points are activated, each initiating event shall latch the input.

   c. The Advanced Walk Test shall be audible and shall be used for pull station verification, magnet activated tests on input devices, input and output device and cabling operation/verification.

4. It shall include the ability to test initiating device circuits and notification appliance circuits from the field without returning to the panel to reset the system.

5. Operation shall be as follows:

   a. Alarming an initiating device shall activate programmed outputs, which are selected to participate in walk test, for 3 seconds.

   b. Introducing a "Trouble" into the initiating device shall activate the programmed outputs for 8 seconds.

   c. All devices tested in walk test shall be recorded in the history buffer.

E. System Reset Switch:

1. Activation of the System Reset Switch shall cause all electronically latched initiating devices, appliances or software zones, as well as all associated output devices and circuits, to return to their normal condition.

2. Initiating devices shall re-report if active.

3. Active Notification Appliance Circuits (NACs) shall not silence upon Reset.

4. Systems that de-activate and subsequently re-activate Notification Appliance Circuits (NACs) shall not be considered equal.

5. All programmed Control-By-Event equations shall be re-evaluated after the System Reset Switch sequence is complete if the initiating condition has cleared.

6. Non-latching "Trouble" conditions shall not clear and re-report upon reset.

7. If the "Alarm" condition(s) still exist, or if they re-occur in the system after System Reset Switch activation, the system shall then resound the alarm conditions.

F. Lamp Test Switch:

1. Activation of the Lamp Test Switch shall sequentially:

   a. Turn on all local system Light Emitting Diodes (LEDs).

   b. Illuminate each segment of the Liquid Crystal Display (LCD).

   c. Display the panel software revision for service personnel.

   d. Turn on the local Piezo-Electric signal.

   e. Automatically return the Fire Alarm System Control Panel to the previous condition.

G. Smoke Detector Sensitivity Adjust:

1. Means shall be provided for adjusting the sensitivity of any or all analog intelligent detectors in the system from the system keypad or from the keyboard of the video terminal.

2. The Fire Alarm System Control Panel shall provide automatic Smoke Detector Sensitivity Adjust based on occupancy schedules including a Holiday list of up to 15 days.

3. Sensitivity range shall be within the allowed UL window and shall be a HIGH/MEDIUM/LOW selection.

4. Smoke Detectors shall have a minimum of 9 selectable sensitivity settings.

5. Sensitivity levels for an "Alarm" condition that are selected by detector of the following:

   a. Photoelectric Smoke Detectors: The "Alarm" level range shall be 0.5 to 2.35 percent per foot.

   b. Ionization Smoke Detectors: The "Alarm" level range shall be 0.5 to 2.5 percent per foot.

   c. Advanced Laser Detectors: The "Alarm" level range shall be 0.02 to 2.0 percent per foot.

6. The system shall also include sensitivity levels of "Pre-Alarm" that are selected by detector to indicate impending "Alarm" conditions to maintenance personnel.

H. Alarm Verification:

1. Each of the Intelligent/Addressable Detectors in the system may be independently selected and enabled to be an alarm verified detector.

2. The alarm verification function shall be programmable from 5 to 30 seconds and each detector shall be able to be selected for verification during the field programming of the system or any time after system turn-on.

3. The Alarm Verification shall not require any additional hardware to be added to the Fire Alarm System Control Panel.

4. The Fire Alarm System Control Panel shall keep a count of the number of times that each detector has entered the verification cycle.

5. These counters may be displayed and reset by the proper operator commands.

6. A "Trouble" condition shall be initiated to alert maintenance personnel when a detector enters verification 20 times.

I. System Status Reports:

1. The system shall be capable of generating and printing a summary of all of the Detectors, Modules, Pull Stations, Zones, etc. that are currently active in the System.

2. This printout will require password protection to prevent unauthorized user access and will automatically print the system report using "soft" (single push) keys.

3. No computer expertise will be required to initiate the System Report sequence.

4. Upon command from a password-authorized operator of the system, a Point Status Report: shall be generated which details each and every installed detector, module, zone, and annunciator, as well as any and all field programmed parameters which have been assigned to these points, and (optionally) printed.

J. Print Screen:

1. Depression of the "Print Screen" Switch shall send the information currently displayed on the 640-character display to the printer.

3.04 FIRE ALARM SYSTEM AUXILIARY SYSTEM CONNECTIONS

A. Integration with Sound System(s):

1. Provide the necessary cabling and one (1) Fire Alarm system addressable relay module at each Sound System rack location shown on the drawings.

2. Connect and program as required.

3. When the Fire Alarm System is in General Alarm, each of the Sound System(s) shall be muted.

4. When the Fire Alarm System Control Panel is reset, the Sound System(s) may return to their previous operational status.

B. Fire Control:

1. The system shall provide a Type ID called "Fire Control" for purposes of air-handling shutdown, which shall be intended to override normal operating automatic functions.

2. Activation of a “Fire Control" point shall cause the control panel to:

a. Initiate the monitor module Control-by-Event

b. Send a message to the panel display, history buffer, installed printer and annunciators

c. Shall not light an indicator at the control panel

d. Shall display ACTIVE on the LCD as well a display a "Fire Control" Type Code and other information specific to the device.

C. Smoke Control Modes:

1. The Fire Alarm System shall provide means to perform Firefighters Smoke Control Station (FSCS) mode Smoke Control to meet N.F.P.A. #90A, N.F.P.A. #90B, and N.F.P.A. #92A.

PART 4 - EXECUTION

4.01 INSTALLATION

A. Installation, workmanship, fabrication, assembly, erection, examination, inspection, and testing shall be in accordance with N.F.P.A. #72, and Factory Mutual Global Property Loss Prevention Data Sheets, except as modified herein.

B. The work performed under this specification shall be of good quality and performed in a workmanlike manner. In this context "Good Quality" means the work shall meet industry technical standards and quality of appearance. The owner reserves the right to reject all or a portion of the work performed, either on technical or aesthetic grounds.

C. The authorized representative of the manufacturer of the major equipment, such as control panels, shall be responsible for the satisfactory installation of the complete system.

D. All equipment shall be attached to walls and ceiling/floor assemblies and shall be held firmly in place (e.g., detectors shall not be supported solely by suspended ceilings).

E. All equipment and components shall be installed in strict compliance with each manufacturer's recommendations. Consult the manufacturer's installation manuals for all cabling diagrams, schematics, physical equipment sizes, etc. before beginning system installation and refer to the riser / connection diagram for all specific system installation / termination / cabling data.

F. Fasteners and supports shall be adequate to support the required load.

G. For Existing System Expansions:

1. The Fire Alarm system contractor shall confirm current loading of the existing signal circuits and/or system amplifier capacity to determine existing load and connect new notification appliances to the most suitable circuit.

2. The existing batteries shall be inspected and amp-hour capacity increased as required for added loads.

4.02 FLEXIBILITY IN SYSTEM DESIGN

A. The Fire Alarm System contractor shall provide flexibility in their design to accommodate future expansion or tenant improvements.

B. Provide all quantities of equipment as specified, while maintaining the “Spare Capacity” requirements listed in this Specification.

4.03 FIRE ALARM SYSTEM MOUNTING HEIGHTS AND LOCATIONS

A. Fire Alarm System Control Panel (FACP):

1. The Fire Alarm System Control Panel shall be installed in the location indicated on the contract documents.

2. The Fire Alarm System Control Panel shall be flush mounted when located in finished areas and may be surface mounted when located in unfinished areas.

3. The top of the Fire Alarm System Control Panel shall be located 60" above the finished floor, unless noted otherwise and shall be installed level.

B. Fire Alarm System Terminal Cabinets:

1. Where Fire Alarm System Terminal Cabinets are required, they shall be installed within spaces designated for electrical equipment (Electrical Rooms, MDF Rooms, IDF Rooms, etc.).

2. Fire Alarm System Terminal Cabinets shall be flush mounted when located in finished areas and may be surface mounted when located in unfinished areas.

3. The top of the Fire Alarm System Terminal Cabinet shall be located 60" above the finished floor, unless noted otherwise and shall be installed level.

C. Fire Alarm Remote Annunciator Panel(s) (FARAP):

1. The Fire Alarm Remote Annunciator Panel(s) shall be installed in the location indicated on the contract documents.

2. The Fire Alarm Remote Annunciator Panel(s) shall be flush mounted when located in finished areas and may be surface mounted when located in unfinished areas.

3. The top of the Fire Alarm Remote Annunciator Panel(s) (FARAP) shall be located 48" above the finished floor, unless noted otherwise and shall be installed level.

4. The maximum length of cabling between the Fire Alarm System Control Panel and the Fire Alarm Remote Annunciator Panel(s) shall be limited to 6,000 feet.

D. Manual Pull Stations:

1. Provide semi-flush mounted Manual Pull Station(s) on standard single gang electrical back box when located in finished areas or where indicated on the contract documents.

2. Provide surface mounted Manual Pull Station(s) on matching back box when located in unfinished areas or where indicated on the contract documents.

3. The operable part of each manual pull station shall be mounted no lower than 42" or more than 48" above the finished floor.

4. Each manual pull station shall be located within 5'-0" of the latch side of an exterior opening man door.

5. In some cases, a single manual pull station may be located in a constantly attended area, such as a receptionist area.

E. Heat Detectors:

1. The distance between Heat Detectors shall not exceed their listed spacing and shall be installed in accordance with manufacturer's recommendations.

2. Heat Detectors shall be within a distance of one-half their listed spacing measured at right angles from:

   a. Walls

   b. Partitions extending upward to within the top 15% of the ceiling height.

   c. Exposed solid joists extending more than 4" down from the ceiling.

3. All points on the ceiling shall have a Heat Detector within a distance equal to or less than 0.7 times the listed spacing.

4. Ceiling mounted Heat Detectors shall not be installed closer than 4" of a wall.

5. Wall mounted Heat Detectors shall not be installed closer than 4" or more than 12" down from the ceiling to the top of the Detector.

6. Heat Detector locations under sloped ceilings / roofs:

   a. Placed at or within 3'-0" (measured horizontally) of the high side of sloped ceilings / roofs.

   b. For Sloped ceilings / roofs less than 30°: All Heat Detectors shall be spaced based upon the overall height of the peak.

   c. For Sloped ceilings / roofs of 30° or greater: All Heat Detectors (other than those located in the peak) shall be spaced based upon the average slope height of the peak.

   d. The number and spacing of additional detectors, if any, shall be based on the horizontal projection of the ceiling.

7. Listed Heat Detector spacing shall be de-rated in accordance with Table 17.6.3.5.1 of N.F.P.A. #72 for spaces having a ceiling height of 10'-0" up to 30'-0" in height.

8. Heat Detectors shall be located 3'-0" or more away from a supply or exhaust H.V.A.C. grille.

F. Linear Heat Detection Cable:

1. The distance between Linear Heat Detector Cables shall not exceed their listed spacing and shall be installed in accordance with manufacturer's recommendations.

2. Linear Heat Detector Cables installed in the following construction types shall be installed in the following locations:

   a. Smooth Ceilings: There shall be a detector run within a distance of one-half the listed spacing measured at a right angle from:

      1) Walls.

      2) Partitions that extend to within the top 15% of the ceiling height.

   b. Solid Joist Construction: The Linear Heat Detector Cables shall be mounted on the bottom of solid joist

      1) Linear Heat Detector Cable spacing on all runs measured at right angles parallel to the joists shall not exceed 50% of the smooth ceiling spacing.

      2) Linear Heat Detector Cable spacing on all runs that parallel both joists and walls, the spacing shall not exceed 25% of the smooth ceiling spacing.

   c. Beam Construction:

      1) Where beams are 4" or less in depth, the ceiling shall be treated the same as a smooth ceiling.

      2) Where beams project more than 4" below the ceiling, the spacing at right angles to the direction of beam travel shall not exceed two-thirds of the smooth ceiling spacing.

      3) Where the beams project more than 18" below the ceiling and are spaced more than 8'-0" on center, each bay formed by the beams shall be treated as a separate area requiring coverage.

3. Ceiling mounted Linear Heat Detector Cables shall not be installed closer than 4" of a wall.

4. Wall mounted Linear Heat Detector Cables shall not be installed closer than 4" or more than 20" down from the ceiling.

5. At least one Linear Heat Detector Cable shall be placed at or within 3'-0" (measured horizontally) of the high side of sloped ceilings / roofs, but no closer than 4" vertically from the high side of sloped ceiling / roofs.

6. Linear Heat Detector Cable spacing shall be de-rated in accordance with Table 17.6.3.5.1 of N.F.P.A. #72 for spaces having a ceiling height of 10'-0" up to 30'-0" in height.

7. Linear Heat Detector Cable shall be located 3'-0" or more away from a supply or exhaust H.V.A.C. grille.

8. For special application protection, the Linear Heat Detector Cable shall be installed immediately above the particular hazard in such a way that it will be exposed to the hot gases emanating from any fire or mounted beneath a horizontal surface that will cause the same radial spread of heat as the ceiling of a room does in area protection applications.

9. Corners should be rounded by pulling the Linear Heat Detector Cable into a natural curve rather than bending it to create a spring tension at the corners that helps hold the Linear Heat Detector Cable in place.

10. All bending and fitting of Linear Heat Detector should be done with the fingers, the use of pliers or other hard tools shall not be used.

11. Bend of 90° or larger shall not be allowed.

G. Smoke Detectors:

1. The distance between Smoke Detectors shall not exceed their listed spacing and shall be installed in accordance with manufacturer's recommendations.

2. Smoke Detectors shall be within a distance of one-half their listed spacing measured at right angles from:

   a. Walls

   b. Partitions extending upward to within the top 15% of the ceiling height.

3. All points on the ceiling shall have a Smoke Detector within a distance equal to or less than 0.7 times the listed spacing.

4. Ceiling mounted Smoke Detectors shall not be installed closer than 4" of a wall.

5. Wall mounted Smoke Detectors shall not be installed closer than 4" or more than 12" down from the ceiling to the top of the Detector.

6. Smoke Detectors shall be located no closer than 3'-0" from a supply or exhaust H.V.A.C. grille.

7. Smoke Detectors shall be located no further than 5'-0" from the Fire Alarm System Control Panel, Remote Audible / Visual Power Supplies, and Transmitting Equipment.

8. For ceiling containing beams, Smoke Detectors shall be installed in accordance with Section 17.7.3.2.4.2.

9. For sloped ceilings with beams, Smoke Detectors shall be installed in accordance with Section 17.7.3.2.4.3.

10. For "Peaked" or "Shed" roofs, Smoke Detectors shall first be spaced and located within 3'-0" of the "Peak" or high side of the "Shed" ceiling, measured horizontally. The number and spacing of additional detectors, if any, shall be based on the horizontal projection of the ceiling.

11. Smoke Detectors shall not be installed prior to the system programming and test period to avoid getting the Smoke Detector dirty from construction. If after the installation of the Smoke Detector construction is still ongoing, the Fire Alarm System Contractor shall protect Smoke Detectors from contamination and physical damage.

12. Smoke Detector listed spacing shall be de-rated in accordance with Table 17.7.6.3.3.2 of N.F.P.A. #72 in "High Air Movement Areas".

H. Smoke Detectors in Dwelling Units:

1. Smoke Detectors in Dwelling Units shall be installed in the following locations:

   a. On every level of a dwelling unit.

   b. Inside every sleeping area of a dwelling unit.

   c. In the hall outside of every sleeping area of a dwelling unit.

   d. At the top and bottom of a stairway.

2. Smoke Detectors in Dwelling Units shall **not** be installed in the following locations:

   a. Within 1'-0" of fluorescent light fixtures.

   b. Within 20'-0" of sources of combustion particles (Stoves, Furnaces, Water heaters, Space Heaters, etc.).

   c. Within 10'-0" of Damp, Humid, or Steamy Areas (Showers, Saunas, Dishwashers, etc.).

d. Within 3'-0" from a door to a bathroom containing a shower or tub.

e. Within 3'-0" from a supply or exhaust H.V.A.C. grille.

f. Within 3'-0" from the tip of the blade of a ceiling suspended fan.

g. Within 4" of a ceiling/wall corner.

h. No further than 3'-0" from the peak of the ceiling measured horizontally.

i. On the wall lower than 1'-0" down from the ceiling

j. In poorly ventilated Kitchens, Garages, and Furnace Rooms.

k. In air streams near Kitchens.

l. In areas where temperatures are regularly below 40°F or above 100°F (Unheated Buildings, Outdoor Rooms, Porches, Unfinished Attics, Basements, etc.).

m. In very Dusty, Dirty, or Greasy Areas (Directly over Stoves or Ranges, Laundry Rooms, etc.).

n. In insect infested areas.

o. Near fresh air vents, ceiling fans, or in very drafty areas.

I. Smoke Detectors for Magnetic Door Holders:

1. Ceiling mounted smoke detectors shall be located in the following locations:

a. Placed along the centerline of the door opening in a perpendicular direction.

b. Placed no further than 5'-0" measured along the ceiling from the door in which it serves

2. Wall mounted smoke detectors shall be located in the following locations:

a. Placed above the door opening centerline.

3. When the distance from the ceiling to the top of the door opening is 2'-0" or less on both sides of the door opening:

a. Provide a single Ceiling Mounted or Wall Mounted Smoke Detector located on one side of the door opening.

4. When the distance from the ceiling to the top of the door opening is 2'-0" or less on one side of the door opening and greater than 2'-0" on the other side of the door opening:

    a. Provide a single Ceiling Mounted or Wall Mounted Smoke Detector located on the higher ceiling side of the door opening.

5. When the distance from the ceiling to the top of the door opening is greater than 2'-0" on both sides:

    a. Provide a Ceiling Mounted or Wall Mounted Smoke Detector located on each side of the door opening.

J. Smoke Detectors for Elevator Recall:

1. Smoke Detectors for Elevator Recall shall be installed in the following manor:

    a. On the ceiling.

    b. Placed along the centerline of each elevator door within the elevator bank under control of the Smoke Detector.

    c. Within 21'-0" of each elevator door. In the elevator bank.

K. Duct Smoke Detectors:

1. Install in accordance with manufacturer's recommendations.

2. Duct Smoke Detectors shall be mounted on return H.V.A.C. air ducts that contain an airflow greater than 2,000 c.f.m.

3. Duct smoke detectors shall be installed in the return H.V.A.C. air duct (not supply) at a point downstream of the last tap location where 100% full air flow is present with properly sized air sampling tubes.

4. Duct smoke detectors shall be installed at each story prior to the connection to a common return and prior to any recirculation or fresh air inlet connection in air return systems having a capacity greater than 15,000 c.f.m. and serving more than one story.

5. Duct Smoke Detectors shall be mounted on supply H.V.A.C. air ducts that contain an airflow greater than 2,000 c.f.m.

6. Duct Smoke Detectors shall be installed in the supply H.V.A.C. air duct (not return) at a point upstream of the first tap location where 100% full air flow is present with properly sized air sampling tubes.

L. Duct Smoke Detector Remote Test Station with Light Emitting Diode (LED):

1. Ceiling Mounted Duct Smoke Detector Remote Test Station with Light Emitting Diode (LED) shall not be installed.

2. Mount Duct Smoke Detector Remote Test Station with Light Emitting Diode (LED) on the wall such that the key is located at an elevation of approximately 5'-0" above finished floor and located within a 5'-0" radius of the duct smoke detector in Floor Plan view.

3. The location of the Duct Smoke Detector Remote Test Station with Light Emitting Diode (LED) shall be visible from the floor and readily accessible.

4. Install Duct Smoke Detector Remote Test Station with Light Emitting Diode (LED) whenever a duct smoke detectors Light Emitting Diode (LED) is not visible to responding personnel from the walking surface / floor, such as:

   a. When installed above a ceiling

   b. At an elevation higher than 8'-0" above finished floor

   c. In an attic

M. Beam Smoke Detectors:

1. Beam Smoke Detector transmitter / receiver unit and reflector unit shall be mounted on stable hard surfaces to prevent false or erratic operation due to movement.

2. The Beam Smoke Detector shall be designed so that small angular movements from the transmitter / receiver unit and reflector unit do not prevent operation of the Beam Smoke Detector.

3. Beam Smoke Detectors shall be installed in locations free of obstacles at all times and does not impact the light path.

4. Beam Smoke Detectors shall not be installed lower than:

   a. 12" for ceiling up to 30'-0" in height

   b. 18" for ceilings heights of 30'-0" up to 60'-0".

N. Carbon Monoxide Detectors:

1. Carbon Monoxide Detectors can be mounted on the wall or ceiling.

2. Carbon Monoxide Detectors shall be flush mounted when located in finished areas.

3. Wall mounted Carbon Monoxide Detectors installed in indoor locations shall be at 80" above the finished floor or 6" below the ceiling, whichever is lower.

4. Carbon Monoxide Detectors shall be placed in the following locations:

   a. On every floor of a Dwelling Unit

   b. Within 10 feet of all Dwelling Unit sleeping areas

   c. In any room that contains a fuel-burning appliance

O. Combination Smoke / Carbon Monoxide Detectors:

1. Combination Smoke / Carbon Monoxide Detectors can be mounted on the wall or ceiling.

2. Carbon Monoxide Detectors shall be flush mounted when located in finished areas.

3. Wall mounted Carbon Monoxide Detectors installed in indoor locations shall be at 80" above the finished floor or 6" below the ceiling, whichever is lower.

4. Carbon Monoxide Detectors shall be placed in the following locations:

   a. On every floor of a Dwelling Unit

   b. Within 10 feet of all Dwelling Unit sleeping areas

   c. In any room that contains a fuel-burning appliance

P. Multi-Criteria Detectors:

1. Multi-Criteria Detectors shall not exceed their listed spacing and shall be installed in accordance with manufacturer’s recommendations.

2. Multi-Criteria Detectors shall be within a distance of one-half their listed spacing measured at right angles from:

   a. Walls

   b. Partitions extending upward to within the top 15% of the ceiling height.

3. All points on the ceiling shall have a Multi-Criteria Detector within a distance equal to or less than 0.7 times the listed spacing.

4. Ceiling mounted Multi-Criteria Detectors shall not be installed closer than 4" of a wall.

5. Wall mounted Multi-Criteria Detectors shall not be installed closer than 4" or more than 12" down from the ceiling to the top of the Detector.

6. Multi-Criteria Detectors shall be located no closer than 3'-0" from a supply or exhaust H.V.A.C. grille.

7. For ceiling containing beams, Multi-Criteria Detectors shall be installed in accordance with Section 17.7.3.2.4.2.

8. For sloped ceilings with beams, Multi-Criteria Detectors shall be installed in accordance with Section 17.7.3.2.4.3.

9. Multi-Criteria Detector locations under sloped ceilings / roofs:

    a. Placed at or within 3'-0" (measured horizontally) of the high side of sloped ceilings / roofs.

    b. For Sloped ceilings / roofs less than 30°: All Multi-Criteria Detectors shall be spaced based upon the overall height of the peak.

    c. For Sloped ceilings / roofs of 30° or greater: All Multi-Criteria Detectors (other than those located in the peak) shall be spaced based upon the average slope height of the peak.

    d. The number and spacing of additional detectors, if any, shall be based on the horizontal projection of the ceiling.

10. Multi-Criteria Detectors shall not be installed prior to the system programming and test period to avoid getting the Smoke Detector dirty from construction. If after the installation of the Smoke Detector construction is still ongoing, the Fire Alarm System Contractor shall protect Smoke Detectors from contamination and physical damage.

11. Multi-Criteria Detector listed spacing shall be de-rated in accordance with Table 17.7.6.3.3.2 of N.F.P.A. #72 in "High Air Movement Areas".

12. Multi-Criteria Detectors in Dwelling Units shall be installed in the following locations:

    a. On every level of a dwelling unit

    b. Inside every sleeping area of a dwelling unit

    c. In the hall outside of every sleeping area of a dwelling unit

    d. At the top and bottom of a stairway

    e. In any room that contains a fuel-burning appliance

13. Listed Multi-Criteria Detector spacing shall be de-rated in accordance with Table 17.6.3.5.1 of N.F.P.A. #72 for spaces having a ceiling height of 10'-0" up to 30'-0" in height.

14. Multi-Criteria Detectors in Dwelling Units shall **not** be installed in the following locations:

    a. Within 1'-0" of fluorescent light fixtures

    b. Within 20'-0" of sources of combustion particles (Stoves, Furnaces, Water heaters, Space Heaters, etc.)

    c. Within 10'-0" of Damp, Humid, or Steamy Areas (Showers, Saunas, Dishwashers, etc.)

    d. Within 3'-0" from a door to a bathroom containing a shower or tub

    e. Within 3'-0" from a supply or exhaust H.V.A.C. grille

    f. Within 3'-0" from the tip of the blade of a ceiling suspended fan

    g. Within 4" of a ceiling/wall corner

    h. No further than 3'-0" from the peak of the ceiling measured horizontally

    i. On the wall lower than 1'-0" down from the ceiling

    j. In poorly ventilated Kitchens, Garages, and Furnace Rooms

    k. In air streams near Kitchens

    l. In areas where temperatures are regularly below 40°F or above 100°F (Unheated Buildings, Outdoor Rooms, Porches, Unfinished Attics, Basements, etc.).

    m. In very Dusty, Dirty, or Greasy Areas (Directly over Stoves or Ranges, Laundry Rooms, etc.).

    n. In insect infested areas

    o. Near fresh air vents, ceiling fans, or in very drafty areas

Q. Low Frequency Sounder Base Only Appliances:

1. Low Frequency Sounder Base Only Appliances shall be flush mounted when located in finished areas.

2. Low Frequency Sounder Base Only Appliances may be surface mounted when located in unfinished areas.

3. Ceiling Mounted Low Frequency Sounder Base Only Appliances shall be installed as recommended by the manufacturer.

4. Wall mounted Low Frequency Sounder Base Only Appliances installed in indoor locations with the top of the appliance not less than 90" above the finished floor or less than 6" below the ceiling, whichever is lower.

R. Low Frequency Sounder Only Appliances:

1. Low Frequency Sounder Only Appliances shall be flush mounted when located in finished areas.

2. Low Frequency Sounder Only Appliances may be surface mounted when located in unfinished areas.

3. Ceiling Mounted Low Frequency Sounder Only Appliances shall be installed as recommended by the manufacturer.

4. Wall mounted Low Frequency Sounder Only Appliances installed in indoor locations with the top of the appliance not less than 90" above the finished floor or less than 6" below the ceiling, whichever is lower.

S. Strobe Only Appliances:

1. Strobe Only Appliances shall be flush mounted when located in finished areas.

2. Strobe Only Appliances may be surface mounted when located in unfinished areas.

3. If there is an interruption of the concentrated viewing path, such as a fire door, an elevation change, or any other obstruction, the area shall be treated as a separate corridor.

4. Strobe Only Appliances indicated on the contract documents are based upon the utilization of (75) Candela (Cd) strobes at a 44'-0" x 44'-0" spacing for ceiling mounted visual appliances and 45'-0" x 45'-0" spacing for wall mounted visual appliances. If the Fire Alarm System Contractor decides to install lower output Strobe Only Appliances, it becomes the responsibility of the Fire Alarm System Contractor to meet the minimum Candela (Cd) rating at the listed maximum room size indicated in Table 18.5.5.4.1(a) for wall mounted Strobe Only Appliances or Table 18.5.5.4.1(b) for ceiling mounted Strobe Only Appliances of N.F.P.A. #72.

5. Ceiling Mounted Strobe Only Appliances shall be installed as recommended by the manufacturer.

6. Wall mounted Strobe Only Appliances installed in indoor locations shall be installed with the entire lens not less than 80" above the finished floor and not greater than 96" above the finished floor.

7. Where low ceiling heights do not allow wall mounted Strobe Only Appliances to be installed with the entire lens not less than 80" above the finished floor, the following shall apply:

   a. Wall mounted Strobe Only Appliance shall be mounted within 6" of the ceiling.

   b. The "Area of Coverage" of Strobe Only Appliances shall be reduced by twice the difference between the minimum mounting height of 80" and the actual, lower mounting height.

8. Strobe Only Appliances installed in corridors greater than 20'-0" wide shall comply with the spacing requirements of Section 18.5.5.4 of N.F.P.A. #72.

9. Strobe Only Appliances installed in corridors less than 20'-0" wide shall not be located more than 15'-0" from the end of the corridor or more than 100'-0" apart.

10. A "Performance Based Alternative" shall be allowed for designs that provide a minimum illumination of 0.0375 lumens per square feet (foot-candles) to all occupiable spaces where visible notification is required.

    a. The illumination from a visible notification appliance (E) at a particular distance is equal to the effective intensity (cd) of the appliance divided by the distance (D) squared ($E = cd/D^2$) for projections to the opposite wall.

    b. The illumination from a visible notification appliance (E) at a particular distance at 90° off-axis is 25% of rated intensity (cd) of the appliance divided by the distance (D) squared ($E = 25\%cd/D^2$) for projections to the adjacent wall.

T. Horn Only Appliances:

1. Horn Only Appliances shall be flush mounted when located in finished areas.

2. Horn Only Appliances may be surface mounted when located in unfinished areas.

3. Ceiling Mounted Horn Only Appliances shall be installed as recommended by the manufacturer.

4. Wall mounted Horn Only Appliances installed in indoor locations with the top of the appliance not less than 90" above the finished floor or less than 6" below the ceiling, whichever is lower.

U. Mini-Horn Appliances:

1. Mini-Horn Only Appliances shall be flush mounted when located in finished areas.

2. Mini-Horn Only Appliances may be surface mounted when located in unfinished areas.

3. Ceiling Mounted Mini-Horn Only Appliances shall be installed as recommended by the manufacturer.

4. Wall mounted Mini-Horn Only Appliances installed in indoor locations with the top of the appliance not less than 90" above the finished floor or less than 6" below the ceiling, whichever is lower.

V. Combination Horn / Strobe Appliances:

1. Combination Horn / Strobe Appliances shall be flush mounted when located in finished areas.

2. Combination Horn / Strobe Appliances may be surface mounted when located in unfinished areas.

3. Strobe Only Appliances indicated on the contract documents are based upon the utilization of (75) Candela (Cd) strobes at a 44'-0" x 44'-0" spacing for ceiling mounted visual appliances and 45'-0" x 45'-0" spacing for wall mounted visual appliances. If the Fire Alarm System Contractor decides to install lower output Combination Horn / Strobe Appliances, it becomes the responsibility of the Fire Alarm System Contractor to meet the minimum Candela (Cd) rating at the listed maximum room size indicated in Table 18.5.5.4.1(a) for wall mounted Combination Horn / Strobe Appliances or Table 18.5.5.4.1(b) for ceiling mounted Combination Horn / Strobe Appliances of N.F.P.A. #72.

4. Ceiling Mounted Combination Horn / Strobe Appliances shall be installed as recommended by the manufacturer.

5. Wall mounted Combination Horn / Strobe Appliances installed in indoor locations shall be at 80" above the finished floor or 6" below the ceiling, whichever is lower.

6. If there is an interruption of the concentrated viewing path, such as a fire door, an elevation change, or any other obstruction, the area shall be treated as a separate corridor.

7. Wall mounted Combination Horn / Strobe Appliances installed in indoor locations shall be installed with the entire lens not less than 80" above the finished floor and not greater than 96" above the finished floor.

8. Where low ceiling heights do not allow wall mounted Combination Horn / Strobe Appliances to be installed with the entire lens not less than 80" above the finished floor, the following shall apply:

   a. Wall mounted Combination Horn / Strobe Appliances shall be mounted within 6" of the ceiling.

   b. The "Area of Coverage" of Combination Horn / Strobe Appliances shall be reduced by twice the difference between the minimum mounting height of 80" and the actual, lower mounting height.

9. Combination Horn / Strobe Appliances installed in corridors greater than 20'-0" wide shall comply with the spacing requirements of Section 18.5.5.4 of N.F.P.A. #72.

10. Combination Horn / Strobe Appliances installed in corridors less than 20'-0" wide shall not be located more than 15'-0" from the end of the corridor or more than 100'-0" apart.

11. A "Performance Based Alternative" shall be allowed for designs that provide a minimum illumination of 0.0375 lumens per square feet (foot-candles) to all occupiable spaces where visible notification is required.

    a. The illumination from a visible notification appliance (E) at a particular distance is equal to the effective intensity (cd) of the appliance divided by the distance (D) squared ($E = cd/D^2$) for projections to the opposite wall.

    b. The illumination from a visible notification appliance (E) at a particular distance at 90° off-axis is 25% of rated intensity (cd) of the appliance divided by the distance (D) squared ($E = 25\%cd/D^2$) for projections to the adjacent wall.

W. Combination Low Frequency Sounder / Strobe Appliances:

1. Combination Low Frequency Sounder / Strobe Appliances shall be flush mounted when located in finished areas.

2. Combination Low Frequency Sounder / Strobe Appliances may be surface mounted when located in unfinished areas.

3. Combination Low Frequency Sounder / Strobe Appliances indicated on the contract documents are based upon the utilization of (75) Candela (Cd) strobes at a 44'-0" x 44'-0" spacing for ceiling mounted visual appliances and 45'-0" x 45'-0" spacing for wall mounted visual appliances. If the Fire Alarm System Contractor decides to install lower output Combination Low Frequency Sounder / Strobe Appliances, it becomes the responsibility of the Fire Alarm System Contractor to meet the minimum Candela (Cd) rating at the listed maximum room size indicated in Table 18.5.5.4.1(a) for wall mounted Combination Low Frequency Sounder / Strobe Appliances or Table 18.5.5.4.1(b) for ceiling mounted Combination Low Frequency Sounder / Strobe Appliances of N.F.P.A. #72.

4. Ceiling Mounted Combination Low Frequency Sounder / Strobe Appliances shall be installed as recommended by the manufacturer.

5. Wall mounted Combination Low Frequency Sounder / Strobe Appliances installed in indoor locations shall be at 80" above the finished floor or 6" below the ceiling, whichever is lower.

6. If there is an interruption of the concentrated viewing path, such as a fire door, an elevation change, or any other obstruction, the area shall be treated as a separate corridor.

7. Wall mounted Combination Low Frequency Sounder / Strobe Appliances installed in indoor locations shall be installed with the entire lens not less than 80" above the finished floor and not greater than 96" above the finished floor.

8. Where low ceiling heights do not allow wall mounted Combination Low Frequency Sounder / Strobe Appliances to be installed with the entire lens not less than 80" above the finished floor, the following shall apply:

    a. Wall mounted Combination Low Frequency Sounder / Strobe Appliances shall be mounted within 6" of the ceiling.

    b. The "Area of Coverage" of Combination Low Frequency Sounder / Strobe Appliances shall be reduced by twice the difference between the minimum mounting height of 80" and the actual, lower mounting height.

9. A "Performance Based Alternative" shall be allowed for designs that provide a minimum illumination of 0.0375 lumens per square feet (foot-candles) to all occupiable spaces where visible notification is required.

    a. The illumination from a visible notification appliance (E) at a particular distance is equal to the effective intensity (cd) of the appliance divided by the distance (D) squared ($E = cd/D^2$) for projections to the opposite wall.

b. The illumination from a visible notification appliance (E) at a particular distance at 90° off-axis is 25% of rated intensity (cd) of the appliance divided by the distance (D) squared ($E = 25\%cd/D^2$) for projections to the adjacent wall.

X. Graphic Maps:

1. Provide a minimum of 6" of wall space between the Graphic Map and each Fire Alarm Remote Annunciator Panel and the Fire Alarm System Control Panel.

2. Tops of the Graphic Maps shall be located 60" above the finished floor, unless noted otherwise.

3. The top of the Graphic Map shall be level.

4. Use the Manufacturer provided mounting hardware and install per Manufacturer's recommendations.

Y. AES Wireless Transceiver:

1. The AES Wireless Transceiver shall be installed in the location indicated on the contract documents.

2. The AES Wireless Transceiver shall be flush mounted when located in finished areas and may be surface mounted when located in unfinished areas.

3. The top of The AES Wireless Transceiver shall be located 60" above the finished floor, unless noted otherwise and shall be installed level.

4. The maximum distance between the AES Wireless Transceiver and the Fire Alarm System Control Panel shall be 25'-0"

Z. Antennas:

1. Antenna shall be installed above the roof line of the building in a location having an unobstructed path to the supervising station receiving equipment.

2. Standard coaxial cabling length shall not exceed 100'-0" and shall be cut to length with a maximum service loop of 1'-0" provided at the radio transmitter enclosure.

3. Enlarged coaxial cabling length shall not exceed 500'-0" and shall be cut to length with a maximum service loop of 1'-0" provided at the radio transmitter enclosure.

4. The coaxial cable shall be entirely installed in metallic conduit.

5. The coaxial cable shall be routed from the antenna to the lightning arrestor (static discharge unit) and from the lightning arrestor to the radio transmitter.

6. The connections at the antenna and lightning arrestor shall be provided with a sealant for weatherproofing.

7. Where the conduit penetrates the building, the conduit should be, at a minimum, 3/4-inch rigid conduit.

8. Penetrating conduit should directly enter the lightning arrestor enclosure on the inside of the building.

9. A drip loop shall be provided where the cable enters conduit to prevent rain or moisture from entering.

4.04 MISCELLANEOUS CONNECTION POINTS

A. Magnetic Door Holders:

1. Magnetic Door Holders (indicated on the contract documents) shall be controlled by use of a relay module.

2. Magnetic Door Holder relay modules shall operate on a 24 Volts D.C. power source that is powered through the Fire Alarm System Control Panel allowing the Magnetic Door Holder relay modules to be on a battery back-up power supply.

3. Upon activation of the Fire Alarm System, Magnetic Door Holder relay modules shall release allowing the Doors to close.

B. Magnetic Door Locks:

1. Magnetic Door Locks (indicated on the contract documents) shall be controlled by use of a relay module.

2. Magnetic Door Lock relay modules shall operate on a 24 Volts D.C. power source that is powered through the Fire Alarm System Control Panel allowing the Magnetic Door Lock relay modules to be on a battery back-up power supply.

3. Upon activation of the Fire Alarm System, Magnetic Door Lock relay modules shall release allowing the Door Locks to open.

C. Coiling Fire Doors:

1. Coiling Fire Doors (indicated on the contract documents) shall be controlled by use of a relay module.

2. Coiling Fire Door relay modules shall operate on a 24 Volts D.C. power source that is powered through the Fire Alarm System Control Panel allowing the Coiling Fire Door relay modules to be on a battery back-up power supply.

3. Upon activation of the Fire Alarm System, Coiling Fire Door relay modules shall release allowing the Coiling Fire Doors to close.

D. Fire Rated Shutters:

1. Fire Rate Shutters (indicated on the contract documents) shall be controlled by use of a relay module.

2. Fire Rate Shutter relay modules shall operate on a 24 Volts D.C. power source that is powered through the Fire Alarm System Control Panel allowing the Fire Rate Shutter control modules to be on a battery back-up power supply.

3. Upon activation of the Fire Alarm System, Fire Rated Shutter relay modules shall release allowing the Fire Rated Shutters to close.

E. Won Doors:

1. Won Doors (indicated on the contract documents) shall be controlled by use of a relay module.

2. Won Door relay modules shall operate on a 24 Volts D.C. power source that is powered through the Fire Alarm System Control Panel allowing the Won Door control modules to be on a battery back-up power supply.

3. Upon activation of the Fire Alarm System, Won Door relay modules shall release allowing the Won Doors to close.

F. Audio/Visual Sound Systems:

1. Audio/Visual Sound Systems (indicated on the contract documents) shall be controlled use of a relay module.

2. Audio/Visual Sound System relay modules shall operate on a 24 Volts D.C. power source that is powered through the Fire Alarm System Control Panel allowing the Audio/Visual Sound System control modules to be on a battery back-up power supply.

3. Upon activation of the Fire Alarm System, the Audio/Visual Sound System relay modules shall terminate Audio/Visual Sound Systems allowing the Fire Alarm System to be the only operational sound producing system.

G. Intercom Systems:

1. Intercom Systems (indicated on the contract documents) shall be controlled by use of a relay module.

2. Intercom System relay modules shall operate on a 24 Volts D.C. power source that is powered through the Fire Alarm System Control Panel allowing the Intercom System relay modules to be on a battery back-up power supply.

3. Upon activation of the Fire Alarm System, the Intercom System relay modules shall terminate the Intercom systems allowing the Fire Alarm System to be the only operational sound producing system.

H. Public Address (PA) Systems:

1. Public Address (PA) Systems (indicated on the contract documents) shall be controlled by use of a relay module.

2. Public Address (PA) System relay modules shall operate on a 24 Volts D.C. power source that is powered through the Fire Alarm System Control Panel allowing the Public Address (PA) System relay modules to be on a battery back-up power supply.

3. Upon activation of the Fire Alarm System, the Public Address (PA) System relay modules shall terminate the Public Address (PA) Systems, allowing the Fire Alarm system to be the only operational sound producing system.

I. Cooking Hood Fire Suppression System:

1. Provide a monitor module for connection of Cooking Hood Fire Suppression Systems to the Fire Alarm System in the locations indicated on the contract documents.

2. Activation of the Cooking Hood Fire Suppression System shall also activate deactivate the exhaust fan associated with the cooking hood in which the event has occurred thru the Fire Alarm System Control Panel.

3. The exhaust fan shall continue to operate until the Fire Alarm System Control Panel has been reset.

4.05 DEVICE RELOCATIONS

A. Prior to installation and without extra charge, the Architect and/or Engineer may:

1. Relocate devices up to 15'-0" from location indicated.

2. Change from a ceiling mounted to a wall mounted installation.

3. Change from a wall mounted to a ceiling mounted installation.

4.06 CONDUIT

A. Provide and install conduit, junction boxes, couplers, connectors, cabling, terminations, and the necessary Fire Alarm System equipment to monitor and/or power any specialty system control panel(s) and equipment.

B. The Contractor is responsible for assuring that the conduit size is suitable for the equipment supplied.

C. All conduit, junction boxes, conduit supports, and hangers shall be concealed in finished areas and may be exposed in unfinished areas.

D. Cabling installed in walls, below 8'-0" in elevation, above inaccessible ceilings or installed exposed to view shall be installed in conduit.

E. Conduit shall be in accordance with N.F.P.A. #70, local requirements, and state requirements.

F. The minimum radius bend of conduit shall be:

1. Ten (10) times the cable outside diameter with no tensile load applied during installation.

2. Twenty (20) times the cable outside diameter with a maximum tensile load of 25 feet/lbs. applied during installation.

G. Conduit shall not enter the Fire Alarm System Control Panel or any other remotely mounted panel, equipment, or back box, except where conduit entry is specified by the manufacturer.

4.07 WIREMOLD SURFACE RACEWAY

A. Provide and install the Wiremold Surface Raceway, junction boxes, couplers, connectors, cabling, terminations, and the necessary Fire Alarm System equipment to monitor and/or power any specialty system control panel(s) and equipment.

B. The Contractor is responsible for assuring that the Wiremold Surface Raceway size is suitable for the equipment supplied.

C. All Wiremold Surface Raceway, junction boxes, conduit supports, and hangers shall be exposed.

D. Wiremold Surface Raceway shall not enter the Fire Alarm System Control Panel or any other remotely mounted panel, equipment, or back box, except where Wiremold entry is specified by the manufacturer.

4.08 CABLING

A. Cabling for 24 Volts D.C. control, alarm notification, emergency communications, and similar power-limited auxiliary functions may be run in the same conduit as Initiating Device Circuits (IDC) and Signaling Line Circuits (SLC).

B. The Contractor is responsible for assuring that the cable quantity, size, and type is suitable for the equipment supplied.

C. Cable must be separated from any open conductors of Power or Class 1 circuits and shall not be placed in any conduit, junction box, or raceway containing these conductors per Article 760 of N.F.P.A. #70.

D. Do not exceed the cabling distance limitation of the equipment, device(s), cable(s), and/or conductor(s) as recommended by the manufacturer of either equipment and/or cables for each installation application.

E. All Fire Alarm System cabling must be new and free from insulation scrapes or peeling.

F. Cabling insulation shall be one of the types required by Article 725-16 of N.F.P.A. #70 and shall be consistently color coded throughout the system.

G. The Fire Alarm System Control Panel shall be connected to a separate dedicated branch circuit rated for a maximum of 20 amperes at 120 Volts A.C. This circuit shall be labeled at the main power distribution panel as "FIRE ALARM".

H. Permanent cable markers shall be affixed to all conductors at terminations and splices.

I. T-Tapping of Class "A" circuits (i.e. Initiating Device Circuits (IDC), Notification Appliance Circuits (NAC), Signaling Line Circuits (SLC) etc.) is not allowed.

J. T-Tapping of Class "B" circuits (i.e. Initiating Device Circuits (IDC), Notification Appliance Circuits (NAC), Signaling Line Circuits (SLC) etc.) is allowed.

K. All cabling terminal blocks shall be the plug-in / removable type and shall be capable of terminating up to 12 AWG cable.

L. Exposed cabling will be allowed above accessible ceilings only.

   1. Class "A" exposed cabling installed vertically in concealed locations shall be provided with a minimum separation distance of 1'-0".

   2. Class "A" exposed cabling installed horizontally in concealed locations shall be provided with a minimum separation distance of 4'-0".

M. Cable not installed in conduit shall have a fire resistance rating suitable for the installation as indicated in N.F.P.A. #70 (e.g., FPLR).

N. The Fire Alarm System Contractor shall insure that cables are installed with care, using techniques which prevent kinking, sharp bends, scraping, cutting, deforming the jacket, or other damage. During inspection, evidence of such damage will result in the material being declared unacceptable. The Fire Alarm System Contractor shall replace all unacceptable cabling at no additional expense to the Owner.

O. For consistency of cabling throughout the entire system equipment, if specific conductor colors are not called out in each system specification, then the following colors shall apply:

1. Red is (+) Positive voltage

2. Black is (-) Negative voltage

3. White is common

4. Green is normally open or normally closed

P. All cabling penetrations into a box, fitting, enclosure, panel, etc. shall be provided with a bushing to protect the cabling from abrasion in accordance with Paragraph 342.46 of N.F.P.A. #70. Hard rubber or compression bushings will not be approved and shall not be used.

Q. In the event of a primary power failure, disconnected back-up battery, an open circuit in the field cabling, or removal of any internal modules a trouble signal shall be activated and remain active until the system is restored to normal condition.

R. Initiating circuits shall be arranged to serve like categories (manual, smoke, water flow).

S. No cable other than the detector circuit shall be permitted in conduit feeding detectors unless approved.

T. Mixed category circuitry shall not be permitted except on signaling line circuits connected to intelligent reporting devices.

U. Minimum cable sizes shall be as follows:

1. 120 Volts A.C. cabling shall be a minimum of #12 American Wire Gauge (AWG).

2. Initiating Device Circuits (IDC) (Manual Pull Stations, Heat Detectors, Smoke Detectors, Carbon Monoxide Detectors, Duct Smoke Detectors, etc.) shall be a minimum of #16 American Wire Gauge (AWG) twisted shielded pair FPL rated.

3. Notification Appliance Circuits (NAC) (Horns, and Strobes) shall be a minimum of #16 American Wire Gauge (AWG) shielded, twisted FPL rated cable.

4. Signaling Line Circuit (SLC) (Manual Pull Stations, Heat Detectors, Smoke Detectors, Carbon Monoxide Detectors, Duct Smoke Detectors, etc.) shall be a minimum of #16 American Wire Gauge (AWG) twisted FPL rated cable.

5. Heat detectors shall be a minimum of #16 American Wire Gauge (AWG).

6. Linear Heat Detector Cables shall be served by a minimum of #18 American Wire Gauge (AWG) from the Fire Alarm System Control Panel out to the hazard area where it is then connected to the beginning of the Linear Heat Detector Cable portion of the circuit.

7. Monitor modules shall be a minimum of #18 American Wire Gauge (AWG).

8. "Direct Burial" cables shall be a minimum of #16 American Wire Gauge (AWG).

9. "Underground in Conduit" cables shall be a minimum of #16 American Wire Gauge (AWG).

V. Provide a Fire Alarm System Device Naming Matrix that identifies the nomenclature used on the shop drawing consisting of the following:

1. Circuit Type

2. Circuit Number

3. Device type

4. Device number

W. All circuits shall be identified with labels to include cable type, quantity, and circuit number in accordance with the following example:

1. Example circuit identification: C2HX3

C = Signal Circuit Cabling
2 = Signal Circuit Number
H = Annunciator Cabling
X = Addressable Initiating Device Circuit Cabling
3 = Addressable Initiating Device Circuit Number

X. Circuit labels shall be provided using an electronic labeler for the following circuit locations:

1. At the Fire Alarm System Control Panel

2. At all junction boxes

4.09 CABLE SUPPORTS

A. All horizontal cables shall be independently supported from other trade work at a maximum of 4’-0” intervals. At no point shall cables rest on, be tied to, or otherwise secured to electrical conduit, plumbing piping, H.V.A.C. ductwork, Fire Protection Piping, accessible ceiling and/or light fixture hangers, or any other equipment.

B. Cable shall be secured to building structure by means of approved low voltage cabling supports.

C. Cabling in any Panel shall be neatly arranged and bundled with cabling ties or approved equivalent, zip ties shall not be utilized.

D. All open cabling and/or conduit shall be installed parallel or perpendicular to the structure.

E. Open cable installations shall use insulated mounting supports, "D rings", or "J-Hooks" above accessible ceilings where approved for such use.

F. Cabling shall be installed near or on structural members as to minimize risk of physical damage by other trades or maintenance personnel servicing the equipment.

G. Installing open cabling and/or conduit on an exposed area of wall that could have been installed in a less conspicuous manner is not acceptable. Any installation that does not meet this requirement will be required to be removed and the ceiling/wall patched and painted to match adjacent surfaces to the satisfaction of the Architect at no additional cost to the Owner.

H. Hangers provided under other Divisions shall not be used for support of Fire Alarm System equipment unless permitted by Engineer.

4.10 JUNCTION BOXES

A. Provide access panels as needed for junction boxes located above inaccessible ceilings or behind walls.

B. All junction boxes for the Fire Alarm System shall be painted red.

C. All Fire Alarm System junction boxes shall be annotated "FA" on the cover in black bold print having minimum character font size of 2" tall by 1" wide.

D. All Fire Alarm System junction boxes shall be painted red (inside and out) and annotated **"FIRE ALARM POWER LIMITED"** on the cover in black bold print having a minimum character font size of ¼" tall by ¼” wide per WAC 296-46B 760

4.11 GROUNDING

A. A grounding system shall be maintained as required by code.

4.12 ADDITIONAL FIELD DEVICES AND INSTALLATION LABOR

A. In order to minimize the impacts to project schedule and costs of implementing changes during the course of construction, the Fire Alarm System Contractor shall include in his bid the following list of material, associated installation labor based on existing jobsite conditions, established construction standards, and all fees associated with documenting and executing changes.

	QTY	Item
1.	____	Manual Pull Stations
2.	____	Heat Detectors
3.	____	Photoelectric Smoke Detectors
4.	____	Ionization Smoke Detectors
5.	____	Smoke Detector Bases
6.	____	Duct Smoke Detector with Detector Heads
7.	____	Beam Detectors
8.	____	Carbon Monoxide Detectors Only
9.	____	Combination Smoke / Carbon Monoxide Detectors
10.	____	Sounder base Only Devices
11.	____	Low Frequency Sounder Base Only
12.	____	Low Frequency Sounders Only
13.	____	Strobes Only Appliances
14.	____	Horns Only Appliances
15.	____	Mini Horn Only Appliances
16.	____	Combination Horn / Strobe Appliances
17.	____	Combination Low Frequency Sounder / Strobe Appliances
18.	____	Monitor Modules

19. ____ Relay Modules

20. ____ Control Modules

21. ____ Zone Interface Modules

22. ____ Isolation Modules

23. ____ Remote Indicating Lamps

24. ____ Device Boxes

25. ____ 4S J-boxes with blank covers

26. ____ LF ¾" EMT with (4) #14 THHN cabling (include couplers, straps, connectors, etc.)

27. ____ LF Wiremold (includes couplers, straps, connectors, etc.)

28. ____ Hrs. Labor for Journeyman Electrician

B. The installation locations of additional field devices shall be as directed by the Architect and/or Engineer with all remaining "Spare Parts" being provided to the Owner upon completion of the final testing and system certifications.

C. All material shall match those components utilized in the system.

D. Provide signed proof of delivery to the Owner with close out documentation.

4.13 FORMAL TESTS AND INSPECTIONS

A. Do not submit a request for formal test and inspection until the preliminary test (including audibility and intelligibility testing results) are completed and corrections are made and approved.

B. The Fire Alarm System Contractor shall arrange for and obtain all required inspections and certificates pertaining to the Fire Alarm System work and deliver the certificates to the Fire Protection Engineer.

C. Submit copies of preliminary test results to the Architect/Engineer for review and approval prior to submitting a request for final acceptance testing with the Authority Having Jurisdiction.

D. Submit a written request to local fire protection authority for formal inspection at least 14 days before the inspection date.

E. An experienced technician regularly employed by the system installer shall be present during the inspection.

F. At this inspection, repeat any or all of the required tests as directed.

G. Correct defects in work provided by the Contractor and perform additional system tests until the system complies with current code and the contract requirements.

H. Furnish appliances, equipment, electricity, instruments, connecting devices and personnel for the tests.

I. Furnish Architect with three (3) copies of test certificates required by testing agencies.

4.14 FIRE ALARM SYSTEM TESTING

A. Upon completion on the system installation, the Fire Alarm System Contractor shall conduct a system test for the Owner, Architect, Engineer, and Authority Having Jurisdiction (for those who wish to attend) to verify operation of the system.

B. This system test shall be conducted by a factory trained technician.

C. The Fire Alarm System Contractor shall provide a minimum of (2), two-way communication devices for the system test.

D. The Fire Alarm System Contractor shall completely fill out all applicable documents contained Section 7.8 "Forms" of N.F.P.A. #72.

E. If the Fire Alarm System Contractor fails the Authority Having Jurisdiction system test and inspection, the following shall occur:

1. The Fire Alarm System Contractor shall make all of the necessary corrections as required, to pass the Authority Having Jurisdiction testing and inspection.

2. Notify the Authority Having Jurisdiction and schedule another test.

3. Pay all associated fees for additional site visits made by the Authority Having Jurisdiction.

4. Continue making corrections until the Fire Alarm System has been accepted by the Authority Having Jurisdiction.

F. After acceptance of the system testing, the Fire Alarm System Contractor shall submit a copy of approved test certificates with Authority Having Jurisdiction signature

4.15 TESTING REQUIREMENTS

A. Fire Alarm Control Panel testing shall include, but is not limited to the following:

1. Verify Control Panel LED’s

2. Verify Control Panel Display

3. Verify Control Panel Piezo-electric audible device operates

4. Verify "Alarm" Condition at the Control Panel

5. Verify "Trouble" Condition at the Control Panel

6. Verify "Supervisory" Condition at the Control Panel

7. Verify "Alarm Silence" Switch at the Control Panel

8. Verify "Queue Switch" at the Control Panel

9. Verify "Reset Switch" at the Control Panel

10. Verify AC Power Failure at the Control Panel

11. Verify Battery Trouble at the Control Panel

12. Verify Battery Charger Output at the Control Panel

13. Verify Battery Back-up "Draw Down" Test at the Control Panel

14. Verify Ground Fault Condition at the Control Panel

15. Verify Open Circuit condition at the Control Panel

16. Verify Short Circuit condition at the Control Panel

17. Verify Addresses match the address and location of all field devices at the Control Panel

B. Fire Alarm System Remote Annunciator Panel testing shall include, but is not limited to the following:

1. Verify Remote Annunciator Panel LED’s

2. Verify Remote Annunciator Panel Display

3. Verify Remote Annunciator Panel Piezo-electric audible device operates

4. Verify "Alarm" Condition at the Remote Annunciator Panel

5. Verify "Trouble" Condition at the Remote Annunciator Panel

6. Verify "Supervisory" Condition at the Remote Annunciator Panel

7. Verify "Alarm Silence" Switch at the Remote Annunciator Panel

8. Verify "Queue Switch" at the Remote Annunciator Panel

9. Verify Remote Annunciator Panel display matches the display at the Fire Alarm System Control Panel.

C. Fire Alarm System Power Supply testing shall include, but is not limited to the following:

1. Verify AC Power Failure at the Power Supply

2. Verify Battery Trouble at the Power Supply

3. Verify Battery Charger Output at the Power Supply

4. Verify Battery Back-up "Draw Down" Test at the Power Supply

5. Verify Ground Fault at the Power Supply

6. Verify Open Circuit at the Power Supply

7. Verify Short Circuit at the Power Supply

D. Fire Alarm System Initiating Device testing shall include, but is not limited to the following:

1. Verify activation of all Manual Pull Stations initiates an "Alarm" condition at the Fire Alarm System Control Panel.

2. Verify activation of all System Smoke Detectors initiate an "Alarm" condition at the Fire Alarm System Control Panel.

3. Verify activation of all Beam Smoke Detectors initiate an "Alarm" condition at the Fire Alarm System Control Panel.

4. Verify activation of all System Heat Detectors initiates an "Alarm" condition at the Fire Alarm System Control Panel.

5. Verify activation of Dwelling Unit Smoke Detector initiates all Low Frequency Sounders within the Dwelling Unit only.

6. Verify activation of all Dwelling Unit Smoke Detectors initiate a "Supervisory" condition at the Fire Alarm System Control Panel.

7. Verify activation of Duct Smoke Detector initiates a "Supervisory" condition at the Fire Alarm System Control Panel and that the H.V.A.C. unit being served by the Duct Smoke Detector shuts down.

8. Verify activation of all Beam Detectors initiates an "Alarm" condition at the Fire Alarm System Control Panel.

9. Verify activation of all System Carbon Monoxide Detectors initiates an "Alarm" condition at the Fire Alarm System Control Panel.

10. Verify activation of all Dwelling Unit Carbon Monoxide Detectors initiates all Low Frequency Sounders within the Dwelling Unit only.

E. Fire Alarm System Notification Appliance testing shall include, but is not limited to the following:

1. Verify that all Strobes are operational and synchronized.

2. Verify that all Horns are operational and synchronized.

3. Verify that Dwelling Unit Low Frequency Sounders are operational and synchronized.

F. Magnetic Door Holder testing shall include, but is not limited to the following:

1. Verify activation of smoke detector placed within 5'-0" of a Magnetic Door Holder releases the Magnetic Door Holders.

G. Magnetic Door Lock testing shall include, but is not limited to the following:

1. Verify an "Alarm" condition at the Fire Alarm System Control Panel releases all Magnetic Door Locks.

H. Fire Protection System Connections testing shall include, but is not limited to the following:

1. Verify opening of each normally closed sprinkler system control valve initiates a "Supervisory" condition at the Fire Alarm System Control Panel.

2. Verify closing of each normally open sprinkler system control valve initiates a "Supervisory" condition at the Fire Alarm System Control Panel.

3. Verify activation of all sprinkler system water flow switches initiate an "Alarm" condition at the Fire Alarm System Control Panel.

4. Verify activation of all sprinkler system pressure switches initiate an "Alarm" condition at the Fire Alarm System Control Panel.

5. Verify sprinkler system electric bell actuation is less than 60 seconds from the time that each inspector’s test valve is opened.

6. Verify connections to the sprinkler system fire pump controller initiate an "Alarm" or "Supervisory" condition at the Fire Alarm System Control Panel.

7. Verify connections to Cooking Hood Suppression System, Clean Agent Suppression System, Air Sampling System, etc. Control Panels initiate an "Alarm" condition at the Fire Alarm System Control Panel.

I. Elevator Connection testing shall include, but is not limited to the following:

1. Verify activation of Smoke Detectors located in Elevator lobbies return all elevators to the primary or alternate floor of egress.

2. Verify activation of Smoke Detectors located in Elevator Machine rooms return all elevators to the primary or alternate floor of egress.

3. Verify activation of Smoke Detectors located at the top of the Elevator Hoistway return all elevators to the primary or alternate floor of egress.

4. Verify Heat Detectors installed in the Elevator Machine Room initiates the "Shut Trip" Feature and immediately shuts down power to the Elevator.

5. Verify Heat Detectors installed at the top of the Elevator Hoistway initiates the "Shut Trip" Feature and immediately shuts down power to the Elevator.

J. Audio/Visual Sound System testing shall include, but is not limited to the following:

1. Verify that each active Audio/Visual Sound System terminates operation upon an "Alarm" condition at the Fire Alarm System Control Panel.

K. Intercom System testing shall include, but is not limited to the following:

1. Verify that each Intercom System terminates operation upon an "Alarm" condition at the Fire Alarm System Control Panel.

L. Public Address System testing shall include, but is not limited to the following:

1. Verify that each Public Address (PA) System terminates operation upon an "Alarm" condition at the Fire Alarm System Control Panel.

M. Smoke Damper and Combination Fire / Smoke Damper testing shall include, but is not limited to the following:

1. Verify an "Alarm" condition at the Fire Alarm System Control Panel from a smoke detector located in the area in which the Smoke Damper or Combination Fire / Smoke Damper is located automatically closes the Smoke Damper or Combination Fire / Smoke Damper and the H.V.A.C. mechanical unit is shut down.

N. Automatic Smoke Vent testing shall include, but is not limited to the following:

1. Verify that Automatic Smoke Vents release upon an "Alarm" condition at the Fire Alarm System Control Panel.

O. Initiating Device Circuits (IDC), Signaling Line Circuit (SLC), and Notification Appliance Circuit (NAC) cable testing shall include, but is not limited to the following:

1. Loop Resistance test.

2. Verify Open Circuit condition on Negative Leg of all circuits.

3. Verify Open Circuit condition on Positive Leg of all circuits.

4. Verify Open Circuit Ground condition on Negative Leg of all circuits.

5. Verify Open Circuit Ground condition on Positive Leg of all circuits.

6. Verify Open Circuit Cable-to-Cable Short condition in all circuits.

7. Verify Closed Circuit Ground Fault condition in all circuits.

8. Verify Closed Circuit Cable-to-Cable Short condition in all circuits.

9. Verify Closed Circuit Cable-to-Cable Short and Ground condition on Negative Leg of all circuits.

10. Verify Closed Circuit Cable-to-Cable Short and Ground condition on Positive Leg of all circuits.

11. Verify Circuit Voltage of each circuit at maximum system operation.

12. Verify Current Draw of each circuit at maximum system operation.

13. Verify Class "B" wiring in all circuits.

4.16 AUDIBILITY REQUIREMENTS

A. The Fire Alarm System Contractor shall perform audibility testing in each space of the building prior to acceptance testing.

B. Decibel readings shall be taken at a point 10'-0" from the appliance at an elevation of 5'-0" above finished floor.

C. The sound level shall meet both of the following requirements:

1. A minimum of 15 decibels (dBs) above the average ambient sound level.

2. A minimum of 5 decibels (dBs) above the maximum sound level having a minimum duration of 60 seconds.

D. Decibel measurements shall be taken using the "A-weighted" measurements which are relatively flat from 600 Hz to 7,000 Hz, "B-weighted" (relatively flat from 300 Hz to 4,000 Hz) and "C-weighted" (relatively flat from 700 Hz to 4,000 Hz, measurements will not be acceptable.

4.17 INSTRUCTION AND TRAINING PERIOD

A. Upon completion of the work and after all tests and inspections by the authority(s) having jurisdiction, the Fire Alarm System Contractor shall "Hands On" demonstrate and train the Owner's designated operation and maintenance personnel in the operation and maintenance of the Fire Alarm System.

B. The Fire Alarm System Contractor's representative shall be a superintendent, foreman, or technician who is knowledgeable in the system installed.

C. The Fire Alarm System Contractor shall arrange scheduled instruction periods with the Owner’s designated operation and maintenance personnel.

D. The Fire Alarm System Contractor shall provide in their bid the following:

1. One (1) editing session of the control panel programming to address any changes required by the Owner.

2. Training periods shall be based upon complexity of the system installed, but in no case be less than 4 hours in duration.

E. Upon request of the Owner, a "DVD" of the training period shall be made available by the Fire Alarm System Contractor at no additional cost to the Owner.

END OF SECTION

SECTION 31 1000

SITE CLEARING

PART 1 GENERAL

1.01 RELATED DOCUMENTS

A. Drawings and general provisions of the Contract, including General Conditions, Supplementary Conditions and Divisions 00 and 01 Specification Sections, apply to work of this section.

1.02 SECTION INCLUDES

A. Tree and Shrub Removal.

B. Stripping and Removal of the following:

1. Topsoil.
2. Sod.
3. Debris.
4. Organic-Bearing Topsoil.

C. Removal of Existing:

1. Asphalt Pavement.
2. Concrete Pavement.
3. Concrete Curbs.
4. Miscellaneous Concrete Elements.

1.03 PROJECT CONDITIONS

A. Contractor is responsible for visiting the site prior to bid to understand the site conditions and scope of clearing work required to accommodate the work of this project.

B. Conform to applicable regulations relating to environmental requirements and disposal of debris.

C. On-site burning of site clearing debris is not allowed.

D. Existing site subgrade soils may be moisture sensitive. Operating equipment on subgrade that has moisture content over optimum for achieving specified compaction could result in a soft, mushy subgrade that will require drying out and recompaction or excavation and removal from the site at Contractor's expense. It shall be the contractor's responsibility to schedule work to be accomplished when weather and site conditions are dry and take any measures necessary to protect site soils from becoming unusable or over optimum moisture content or import suitable materials.

E. Control the flow, collection, channeling and discharge of water on site to prevent damage to subsoil and excavations, to prevent off-site damage of any type and to conform to all ordinances and laws. Do not allow water to stand in any area where the building or pavement is to be constructed.

F. Protect above and below-grade utilities, refer to Section 02 1725 for requirements related to existing utilities.

G. Tree and Shrub Protection: Protect existing trees and shrubs not scheduled for removal from damage during clearing and grubbing work.

H. Existing Improvements: Provide protection necessary to prevent damage to existing improvements not indicated for removal. Restore damaged improvements to their original condition.

I. Protect bench marks, survey control points, existing structures, sidewalks, paving and curbs from excavating equipment and vehicular traffic.

J. Traffic: Conduct site clearing operations to ensure minimum interference with roads, streets, walks and other adjacent occupied or used facilities.

1.04 SAFETY CONSIDERATIONS

A. The Contractor is solely responsible for developing a safety plan to protect workers and the public from injury or harm conforming to all Local, State and Federal requirements and for executing and enforcing it on the Project site.

1. Contractor shall consult with their own Geotechnical Engineering expert for determining soil classification relative to safe sloping of soils.

2. Determine safe excavation and dewatering methods, monitor excavations and earthwork operations for safety concerns and provide shoring and other protection as required to protect workers.

3. It is not the intent of the Construction Documents to dictate any unsafe construction means or methods; determine means and methods of construction conforming to their safety plan as required to construct work shown on the Contract Documents.

PART 2 PRODUCTS

PART 3 EXECUTION

3.01 COORDINATION

A. Review, coordinate and accommodate work of other sections that interface with, affect or are affected by the work of this section so as to facilitate the execution of the overall work of this project in a coordinated and efficient manner.

3.02 PROTECTION PRIOR TO SITE CLEARING

A. Do not start any clearing work until installation of erosion and sediment control provisions specified in Section 31 2500, the Stormwater Pollution Prevention Plan Report and as shown on the Drawings, have been installed.

1. Monitor water runoff from the site continuously during clearing work and implement any temporary erosion and sediment control measures on-site to mitigate / prevent turbid water runoff from leaving the site in conformance with Washington State Department of Ecology regulations.

B. Locate, identify and protect existing underground and overhead utilities from damage, refer to Section 02 1725 for requirements regarding existing utilities. Pothole utilities to verify location. Existing utilities shall be located and marked in the field before the Contractor begins excavating.

C. Tree and Shrub Protection: Prior to start of any work flag each existing tree and shrub in the vicinity of the clearing area that is not scheduled for removal and install 6-inch wide construction ribbon around each tree / shrub.

D. Protect benchmarks, survey control joints and existing structures from damage or displacement. Said benchmark or control points shall be restored by a Professional Land Surveyor licensed to practice in the State of Washington, in accordance with standard of professional practice and State regulations.

3.03 PREPARATION

A. Lay out the limits of disturbance accurately on the site and mark clearly for maximum visibility by equipment operators during clearing operations.

3.04 CLEARING AND GRUBBING

A. Remove trees, stumps and shrubs within limits of disturbance, unless otherwise noted. Remove main root balls, tap roots and root systems, including those that extend deeper than topsoil stripping depths.

B. Clear all vegetation and deadwood, including roots within the limits of disturbance, unless otherwise noted.

C. Where existing trees are indicated to remain, stop topsoil stripping at the tree dripline or further distance away to prevent damage to the root system.

D. Dispose of removed materials offsite at a Contractor provided and permitted disposal site.

E. Open burning of waste material is not allowed.

F. Asphalt / concrete pavement within the limits of disturbance, as indicated on the Drawings, shall be removed down to subgrade.

3.05 STRIPPING AND REMOVAL

A. Strip off and remove a minimum of 6-inches of all sod and organic topsoil to limits of grading exposing undisturbed native subgrade soil that is free of any organic material including roots.

1. Coordinate with geotechnical report recommendations. Stripping depth may exceed 6 inches in some instances.

B. Topsoil may be stockpiled on-site for re-use as fill in landscaping areas if it meets the definition of Satisfactory Fill per Section 31 2000 Earthwork. Topsoil may also be stockpiled and amended to meet soil restoration requirements with approval by the Landscape Architect after review of a soil test. Refer to soil restoration and site preparation requirements on the Landscape Plans.

C. Stripping material in upper 6-inches to 12-inches may contain elevated levels of Arsenic. All stripping material shall be hauled off-site and disposed of in an approved and permitted contaminated material disposal site. Contractor is responsible for all associated permits and fees.

1. During stripping operations, remove localized areas of topsoil that are greater in depth than noted above as required to fully remove surface vegetation, organic material, roots and organic soils.

D. Remove exposed boulders and any building debris encountered from site.

3.06 REVIEW OF SUBGRADE BY GEOTECHNICAL ENGINEER

A. Schedule Geotechnical Engineer to inspect the exposed subgrade soils after stripping and removal has been completed but prior to any earthwork being started. Give Engineer at least 3 days advanced notice for each site visit.

1. Geotechnical Engineer shall inspect subgrade soils and determine if they are free of organic material and suitable for earthwork to proceed.

2. If Geotechnical Engineer determines that any subgrade soils still contain organic material or are otherwise unsuitable, strip off and remove the unsuitable soils as required by Geotechnical Engineer.

3.07 PROTECTION AFTER SITE CLEARING

A. Protecting Subgrade:

1. Protect newly exposed subgrade from damage due to water, traffic, freezing and erosion. Plan work so that subgrade is not left open and exposed to wet weather and construction traffic.

2. Contractor is responsible for planning and overseeing the work so that exposed subgrade is protected from becoming soft, yielding or unsuitable after being exposed, requiring over-excavation and structural fill.

B. Utilities: Refer to Section 02 1725 for requirements related to existing utilities. The Contractor shall protect all private and public utilities from damage. Adequate provisions shall be made for maintaining all electrical and other underground facilities encountered during construction. Structures which have been disturbed or damaged by the Contractor shall be satisfactorily restored, unless shown for demolition, upon completion of the work.

C. Pavement: The Contractor shall protect from damage all street pavement or paved areas on streets leading to site.

D. Access Streets and Roadways: Provide wheel cleaning stations to clean wheels and undercarriage of trucks before leaving site, as necessary, to prevent dirt from being carried onto public streets. If streets are fouled, they must be cleaned immediately in conformance with Fill in Jurisdiction, Washington State Department of Ecology and all governing requirements and regulations.

E. Repair and / or replacement of damaged facilities shall be accomplished at the Contractor's expense.

3.08 CLEAN-UP

A. Remove any dirt and debris from streets and pavements, dry sweep affected areas clean.

B. Clean out and remove any dirt, silt or debris that is carried offsite or into any storm drainage system by water runoff resulting from clearing work on this site.

C. Shape earthwork to blend naturally into surroundings.

3.09 FIELD QUALITY CONTROL

A. Contractor Quality Control: Employ / assign quality control personnel to monitor the work of this section for conformance to the requirements of the Contract Documents and to good construction practices.

1. Contractor is solely responsible for managing and controlling the quality of the work and conformance with the requirements of the Contract Documents.

END OF SECTION

SECTION 31 2000

EARTHWORK

PART 1 GENERAL

1.01 RELATED DOCUMENTS

A. Drawings and general provisions of the Contract, including General Conditions, Supplementary Conditions and Divisions 00 and 01 Specification Sections, apply to work of this section.

1.02 SECTION INCLUDES

A. Earthwork required for the construction of the Work including, but not limited to the following:

1. Excavation.
2. Fill.
3. Compaction.
4. Grading.
5. Hauling.

1.03 REFERENCES

A. References shall be the edition current as of the date of the Contract Documents.

B. ASTM C136/C136M - Standard Test Method for Sieve Analysis of Fine and Coarse Aggregates.

C. ASTM D1556/D1556M - Standard Test Method for Density and Unit Weight of Soil in Place by Sand-Cone Method.

D. ASTM D1557 - Standard Test Methods for Laboratory Compaction Characteristics of Soil Using Modified Effort (56,000 ft-lbf/ft3 (2,700 kN-m/m3)).

E. ASTM D2167 - Standard Test Method for Density and Unit Weight of Soil in Place by the Rubber Balloon Method.

F. ASTM D2487 - Standard Practice for Classification of Soils for Engineering Purposes (Unified Soil Classification System).

G. ASTM D2922 - Standard Test Methods for Density of Soil and Soil-Aggregate in Place by Nuclear Methods (Shallow Depth).

H. ASTM D2937 - Standard Test Method for Density of Soil in Place by the Drive-Cylinder Method.

I. IBC - International Building Code.

J. WSDOT 9-03.14(1) - Washington State Department of Transportation - Gravel Borrow.

1.04 SUBMITTALS

A. Refer to Section 01 3300 for submittal procedures.

B. Provide applicable analysis of each product proposed for use per ASTM C136/C136M. Clearly identify the proposed use for each product.

1. Import Structural Fill

2. Wet Weather Structural Fill

3. Field Quality Control Testing Reports from Testing Agency and Geotechnical Engineer

1.05 DEFINITIONS

A. Satisfactory Fill:

1. In general, the on-site soils have a moderately high silt content and are moisture sensitive making them difficult to be reused as structural fill and achieve proper compaction especially during wet weather conditions.

2. During dry weather construction, any non-organic on-site soil may be considered for use as structural fill provided it meets the criteria described herein for Structural Fill. If the soils are over the optimum moisture content when excavated, it will be necessary to aerate or dry the soil prior to placement as structural fill.

3. Satisfactory Fill shall conform to ASTM D2487 soil classification groups GW, GP, GM, SW, SP, SM, ML, CL, or a combination of these group symbols.

4. Satisfactory Fill shall have a moisture content no more than 2 percentage points above or below the optimum value for that particular soil in accordance with ASTM D1557.

a. Satisfactory Fill may include soils that have been moisture-conditioned by means of aeration and / or amendment.

5. Satisfactory Fill shall be free of rock particles larger than 6-inches (based on largest dimension) unless otherwise shown on the Drawings. Rock particles between 4-inches and 6-inches must be occasional or separated so concentrations of rock particles do not occur in local areas.

6. Satisfactory Fill shall contain no organic matter, debris, waste, environmental contaminants, frozen materials, vegetation, and other deleterious matter.

B. Unsatisfactory Fill: Any materials that do not comply with the above-stated requirements for Satisfactory Fills are considered to be unsatisfactory for on-site filling purposes.

1. Unsatisfactory Fill includes man-made fills; trash; refuse; material that contains any organic matter; and frozen material.

2. Unsatisfactory Fill includes any material containing hazardous substances, petroleum products, or any other environmental contaminants. The owner's representative and Geotechnical Engineer shall be notified of any contaminated materials found on site.

3. Unsatisfactory Fill also includes satisfactory materials that are not maintained within 2 percentage points of optimum moisture content at time of compaction in accordance with ASTM D1557.

C. Fines: In regard to soil, the term "fines" refers to that portion passing the U.S. No. 200 sieve. Fines collectively include any combination of silt-size and clay-size particles.

D. Imported Fill: Satisfactory Fill provided from off-site borrow areas. These are typically used when sufficient quantities of Satisfactory Fill materials are not available from required on-site excavations.

E. Utilities: On-site underground pipes, conduits, ducts and cables, as well as underground services within buildings.

F. Building Area: That portion of site directly beneath the building slab or building footings.

G. Final Subgrade: The horizontal compacted surface that underlies the entire footprint of the Building Area or pavement area. The elevation of the Final Subgrade shall conform to the Drawings.

H. Limit of Disturbance: Limit of clearing, grubbing, and stripping of topsoil for earthwork purposes.

I. Native Soils: On-site soils in-situ prior to start of construction.

J. Overexcavation: Excavation beyond or below the lines, grades, subgrades and elevations shown in the contract documents.

K. Overexcavation Fill or Backfill: Filling or backfilling an overexcavation to the lines, grades, subgrades, and elevations shown in the contract documents.

L. Bank Yards (BCY): Volume of material measured cubic yards as it lies in its native bank state in the ground.

M. Truck Yards (TCY): Volume of material measured in cubic yards in the hauled conveyance.

1.06 PROJECT CONDITIONS

A. Employ the materials, equipment, procedures and management expertise necessary to accomplish earthwork during wet weather while conforming to the requirements of the Contract Documents.

B. Existing site subgrade soils may be moisture sensitive and may not be able to be compacted to the specified density when moisture content is over optimum. Operating equipment on subgrade that has a moisture content over optimum for achieving specified compaction will result in a soft, mushy subgrade that will require drying out and recompaction or excavation and removal from the site and replacing and compacting with new Satisfactory Fill at Contractor's expense. It shall be the contractor's responsibility to schedule work to be accomplished when weather and site conditions are dry and take any measures necessary to protect site soils from becoming unusable due to an over optimum moisture content; otherwise, it will be necessary to import Satisfactory Fill.

C. Some groundwater seepage out of cuts and in excavations may be encountered on this site depending on time of year and weather. Provide sump holes, drainage trenches and pumps to collect, channel and remove this seepage water from the work areas and keep excavations free from standing water.

D. Control the flow, collection, channeling and discharge of water on site to prevent damage to subsoil and excavations, to prevent off-site damage of any type, and to conform to all ordinances and laws. Do not allow water to stand in any area where the building or pavement is to be constructed. Roller seal all surfaces at end of each work day to reduce the potential for moisture infiltration into the subgrade soil.

E. Existing Improvements: Provide protection necessary to prevent damage to existing improvements not indicated for removal. i.e. Bench marks, survey control points, existing offsite structures, sidewalks, paving and curbs. Restore damaged improvements to their original condition at Contractor's expense.

F. Traffic: Conduct earthwork operations to ensure minimum interference with roads, streets, walks and other adjacent occupied or used facilities.

G. Existing Utilities: Locate, mark and protect existing utilities as specified in Section 02 1725 prior to start of work.

H. Schedule shutdown of existing utilities affected by work of this section with appropriate utility company and Owner as specified in Section 02 1725 prior to start of work.

1.07 SAFETY CONSIDERATIONS

A. The Contractor is solely responsible for developing a safety plan to protect workers and the public from injury or harm conforming to all Local, State and Federal requirements and for executing and enforcing it on the Project site.

1. Contractor shall consult with their own Geotechnical Engineering expert for determining soil classification relative to safe sloping of soils.

2. Determine safe excavation and dewatering methods, monitor excavations and earthwork operations for safety concerns and provide shoring and other protection as required to protect workers.

3. It is not the intent of the Construction Documents to dictate any unsafe construction means or methods; determine means and methods of construction conforming to their safety plan as required to construct work shown on the Contract Documents.

PART 2 PRODUCTS

2.01 MATERIALS

A. General: Provide Imported Fill materials when satisfactory existing site soil materials are not available from excavations.

B. Structural Fill: Soil materials consisting primarily of well-graded gravel, or sand and gravel, obtained from either on-site or off-site sources, or a blend of the two. Meets all requirements for Satisfactory Fill, except that it shall not contain rock particles larger than 6-inches (based on largest dimension).

1. Existing Site Soils may be used in structural fill applications upon approval by the Geotechnical Engineer.

C. Imported Structural Fill: Includes Gravel Borrow in accordance with WSDOT 9-03.14(1). Soil imported from other sites may be used in structural fill applications upon approval by the Geotechnical Engineer.

D. Wet Weather Imported Structural Fill: Meets the requirements of Structural Fill and the fines content shall not exceed 5 percent, by dry weight, based on a wet sieve analysis of that portion passing the 3/4-inch sieve. Gravel content should range between 20 and 50 percent retained on the No.4 mesh sieve. Fines should not be plastic.

E. Non-Structural Fill: Materials that meet the requirements for Satisfactory Fill except they include measurable organic matter content. This typically refers to on-site topsoil strippings that are used as fill material within the top 24-inches below landscaping areas only.

PART 3 EXECUTION

3.01 COORDINATION

A. Review, coordinate and accommodate work of other sections that interface with, affect or are affected by the work of this section so as to facilitate the execution of the overall work of this project in a coordinated and efficient manner.

B. Coordinate earthwork operations with construction of underground utilities and buildings to prevent damage to work and out of sequence construction.

3.02 HORIZONTAL AND VERTICAL CONTROL

A. Employ a Land Surveyor registered the State of Washington to lay out and stake the Work and provide horizontal and vertical control; refer to Section 01 7000 for additional requirements.

1. Locate and protect survey control and reference points.

2. Provide field engineering services. Establish elevations, lines and levels, utilizing recognized engineering survey practices.

B. Lay out and stake the work area prior to starting earthwork.

3.03 PREPARATION

A. Locate and mark existing utilities as required in Section 02 1725.

B. Schedule shutdown of existing utilities affected by earthwork operations as specified in Section 02 1725.

C. Protect structures, utilities, sidewalks, pavements and other facilities from damage caused by earthwork operations.

D. Confirm that erosion-control measures are in place to prevent erosion or displacement of soils and discharge of soil-bearing water runoff or airborne dust to adjacent properties and walkways.

3.04 DEWATERING

A. Obtain necessary permits for dewatering from the applicable jurisdiction.

B. Prevent surface water from entering excavations; prevent water from ponding on prepared subgrades and from flooding Project site and surrounding area.

C. Protect subgrades from softening, undermining, washout and damage by rain or water accumulation.

1. Reroute surface water runoff away from excavated areas. Do not allow water to accumulate in excavations.

2. Install a dewatering system to keep subgrades dry and convey ground water away from excavations. Maintain until dewatering is no longer required.

D. Dewatering wastewater shall not be allowed to enter any portion of the proposed stormwater system unless otherwise approved by the Engineer.

E. Refer to Section 31 2500 for disposal.

3.05 EXCAVATION

A. Excavate to elevations and dimensions required to accommodate the work.

B. Excavation for Building Footings and Slabs and Site Pavements:

1. Excavate for building footings to firm and unyielding native subgrade. Structural Fill may be placed over properly prepared native soil as approved by the Geotechnical Engineer.

2. Contractor shall obtain authorization to overexcavate any unsuitable soils present below building footings and pavement subgrades as needed to reach suitable subgrades. All overexcavations shall extend laterally outward from the footings a distance equal to the vertical depth of excavation. Contractor shall backfill to subgrade elevation with compacted structural fill as recommended by the Geotechnical Engineer.

3. Excavate for Slabs to firm and unyielding native or fill subgrade. Structural Fill may be placed over properly prepared subgrade soil as approved by the Geotechnical Engineer.

4. Excavate pavement subgrade to firm and unyielding native or fill soil as approved by the Geotechnical Engineer.

5. Utilize a smooth-edge bucket for footing excavation subgrade to limit disturbance to subgrade bearing surface.

C. Perform excavation using capable, well-maintained equipment and methods conforming to local, state, and federal regulations.

D. Excavation outside the building foundation or paved areas shall be backfilled with soil that is free of organic material, construction debris, cobbles and boulders or with a controlled low-strength material. The backfill shall be placed in lifts and compacted in a manner that does not damage the foundation or the waterproofing or dampproofing material.

E. Excavate and remove any boulders or debris uncovered (partially or completely) during excavation and remove from the site, backfill any resulting voids in subgrade with structural fill with the requirements for specific locations as stated herein and compacted to specified density.

F. Excavation near foundations for any purpose shall not remove lateral supports without first underpinning or protecting the foundation against settlement or lateral translation.

G. Compact any subgrade excavated to required grade to a uniformly firm and unyielding condition each day before leaving site.

1. In wet weather or wet site conditions, do not excavate and expose final subgrade elevation if proper compaction of soil cannot be achieved due to soil conditions that exceed optimum moisture content.

H. Reconstruct subgrades disturbed / damaged by freezing temperatures, frost, rain, accumulated water or construction activities, as required by Geotechnical Engineer.

I. Measurement and Payment:

1. Bank Yards (BCY) shall be used to measure the quantity for any excavation, overexcavation, or authorized material off-haul that results in a change to the contract requiring negotiations of price between the Contractor and Owner/Architect.

3.06 SUBGRADE PREPARATION

A. General: Geotechnical Engineer shall inspect the excavated subgrade in existing undisturbed soil beneath buildings and pavements, and in any trench that exhibits soft or pumping subgrade.

B. Scarification and Compaction: Unless otherwise approved by the Geotechnical Engineer, areas exposed by excavation or stripping and on which subgrade preparations are to be performed shall be scarified to minimum depth of 12-inches and compacted as specified hereinafter.

C. Proof Rolling:

1. Subgrades shall be proof rolled to detect areas of insufficient compaction, pockets of soft soils, or areas of excess yielding.

2. Proof rolling shall be accomplished by making a minimum of two complete passes with fully loaded tandem axle dump truck with a minimum weight of 20 tons, or approved equal, in each of two perpendicular directions while under the supervision and direction of the Geotechnical Engineer.

3. Limit vehicle speed to 3 mph.

4. Areas of limited access that cannot be proof rolled can be evaluated using a steel 1/2-inch diameter t-probe.

D. Remediation: Wherever proof rolling reveals areas of failure, such as soft spots, unsatisfactory soils, or zones of excessive pumping or rutting, as determined by the Geotechnical Engineer, the deficient soils shall be repaired by over-excavating the areas of failure and replacing it with compacted structural fill as specified herein or be further scarified, moisture conditioned, recompacted and proof rolled.

E. Retesting: Any proof rolled subgrade that remains exposed longer than 48 hours or on which precipitation has occurred shall be proof rolled again prior to paving or foundation pours.

3.07 STORAGE OF STOCKPILED MATERIALS

A. Stockpile imported materials and excavated native soil materials separately without intermixing. Place, grade and shape stockpiles to drain surface water. Cover to prevent windblown dust and erosion.

1. Temporary Stockpiles: Cover with waterproof sheeting when required to prevent moisture sensitive soil from becoming too wet to achieve specified compaction. Secure sheeting with stakes and sandbags.

2. Stockpile soil materials well away from edges of excavations or the crest of any slopes.

3. Stockpiles shall not be placed in a manner that would create sediment-laden runoff discharging to the storm system.

3.08 FILL

A. Preparation: Subgrade surface over which fill will be placed shall be free of any organic matter, vegetation, topsoil, debris, unsatisfactory soil materials, uncompactable soil and deleterious materials from ground surface before placing fills.

1. Bench sloped subgrade surfaces that are steeper than 1 vertical to 5 horizontal into level, benched steps with keyways so fill material will bond with existing material. Cut benches between 6 and 10 feet wide and not exceeding 3 feet in height.

2. Subgrade Approval: Do not place fill until Geotechnical Engineer has inspected and approved the subgrade.

B. Placement and Compaction: Place fill material in horizontal lifts of uniform thickness; limit fill layer thickness to no more than the compaction equipment being utilized is capable of compacting to the specified density through the full depth of layer, but in no case shall fill layer exceed a maximum thickness of 12-inches in loose thickness.

1. Compact fill layers uniformly over the entire fill area to at least 95 percent of maximum dry density as determined by ASTM D1557.

2. Continuously monitor compaction effort to assure that specified density is being achieved over entire area of fill.

3. Adjust fill layer thickness as required to achieve specified compacted density through the full depth of layer.

4. Coordinate fill placement activities with Geotechnical Engineer and Testing Agency to allow for compaction testing.

5. Take special precautions around building and site structures to assure that compaction of fill is achieved, adjust the type of compaction equipment and change type of fill being placed to avoid areas that do not achieve the specified density or result in settlement.

6. If wet weather or site conditions are anticipated or encountered, utilize fill materials and means and methods that will permit placement and compaction of fill material to specified density.

C. Compaction at Fill Slopes: Construct slope face by careful compaction of the fill materials out to and beyond the final design slope face. Grade slope face to required contours after compaction is achieved.

D. Moisture Content: Uniformly moisten or aerate fill soil before compaction to the optimum moisture content to achieve specified density.

1. Fill Material with Over Optimum Moisture Content: If specified density cannot be achieved because fill material is over optimum moisture content, select either of the following options:

a. Remove over optimum fill from the site and replace with fill having a moisture content at or near optimum.

b. If weather and project schedule permits, dry out fill as required to achieve specified compaction by spreading out, etc.

2. Fill Material with Under Optimum Moisture Content: Remove from site and replace, or provide water and equipment necessary to increase moisture content of fill uniformly so as to achieve specified density.

E. Protection: Protect fill soils, both before and after placement, from becoming satisfactory for use by being left exposed to wet weather before placement, or from construction traffic, water damage or erosion after placement.

1. Grade surface to drain and roller-seal fill with steel drum roller compactor to avoid ponding water.

2. If wet weather or site conditions are anticipated or encountered, place crushed surfacing working pad over any fill soils where construction traffic will disturb or soften soil as soon as possible after fill is completed.

3. Backslope grade or construct diversion ditch or berm at top of slopes to prevent surface water from running down face of slope.

4. Cover slopes to protect from erosion.

F. Reconstruct in place fill soil disturbed / damaged by freezing temperatures, frost, rain, accumulated water or construction activities, as required by Geotechnical Engineer.

G. Measurement and Payment:

1. Bank Yards shall be used to measure the quantity for overexcavation backfill, or authorized material import that results in a change to the contract requiring negotiations of price between the Contractor and Owner/Architect.

3.09 FILL PROOF ROLLING AND GEOTECHNICAL REVIEW

A. Fill Areas Under Building and Site Pavement: After fill has been placed and compacted to specified density over site / area and after any trenching and backfill has been completed, but immediately prior to placement of any structural elements, reinforcing steel or pavement base course, the exposed compacted fill soils shall be inspected by the Geotechnical Engineer for acceptance and / or identification of any area where fill soils are soft or yielding.

1. Proof rolling and review by Geotechnical Engineer should occur immediately prior to construction of any building / structure element or placement of pavement / slab base course or slab capillary break.

2. Do not proof roll any compacted in place fill that is wet or over optimum moisture content for compaction unless required by the Geotechnical Engineer.

3. Schedule Geotechnical Engineer to inspect structural fill under buildings and pavements has been placed and compacted to specified density. Give Geotechnical Engineer at least 3 days advance notice for each site visit; do not schedule when weather or site conditions are wet.

4. All areas of the fill area shall be proof rolled under the observation of the Geotechnical Engineer with heavily loaded rubber-tired equipment or large steel drum vibratory compaction equipment as determined most satisfactory by Geotechnical Engineer.

5. If Geotechnical Engineer determines that any area of the fill is not satisfactory or is soft and yielding, excavate unsatisfactory soils and replace with structural fill material compacted to specified density as required by Geotechnical Engineer.

3.10 MOISTURE CONTROL OF FILL

A. Uniformly moisten or aerate subgrade and each subsequent fill or backfill layer before compaction to the optimum moisture content to achieve specified density.

1. Provide equipment for applying water uniformly to the subgrade.

2. Do not place backfill or fill material on surfaces that are muddy or frozen.

3. Remove and replace, or scarify and air-dry otherwise satisfactory material that exceeds optimum moisture content and is too wet to compact to specified density.

3.11 COMPACTION

A. Compact soil to the following percentage of maximum dry density as determined by the ASTM D1557 (Modified Proctor) test procedure:

1. Under Building Footings: 95%.

2. Under Building Slab Floors: 90%.

3. Under Asphalt Pavements: 95%.

4. Under Concrete Pavements: 95%.

5. Backfill Immediately Behind Retaining Walls: 90%.

6. Landscape Areas: 88%.

B. Reduce the thickness of lifts as required to accommodate the limitations of the compaction equipment being used to achieve specified density.

C. Failure to Achieve Compaction Density: Contractor shall remove and replace any fill material that fails to meet the specified compaction density or that settles after project completion at their own expense.

3.12 GRADING

A. General: Uniformly grade areas to a smooth surface free from irregular surface changes. Comply with compaction requirements and grade to cross sections, lines and elevations indicated.

1. Provide a smooth transition between adjacent existing grades and new grades.

2. Cut out soft spots, as determined by the Geotechnical Engineer, fill low spots and trim high spots to comply with required surface tolerances.

3. Regrade and re-compact areas subjected to vehicular traffic.

B. Grading Subgrade: Finish subgrades to required elevations.

1. Slope subgrades around building perimeter away from building to facilitate water drainage and prevent ponding around building.

2. Slope pavement subgrades to match slope and profile of finish pavement surface elevations to facilitate water drainage avoid trapping subsurface water.

3. Subgrade surface shall be graded smooth and free of low spots or ridges that would stop the flow of water or result in ponding.

3.13 DUST CONTROL

A. Control and prevent the production of airborne dust due to wind or construction equipment traffic at any time during construction by watering the work area and site, comply with all local and State air quality regulations.

B. Do not permit conditions on the site that would allow airborne dust resulting from the work of this project to drift onto adjacent properties.

3.14 PROTECTION

A. Protecting Subgrade and Graded Areas:

1. Protect newly graded areas from damage due to traffic, freezing and erosion.

2. Protect newly exposed subgrade from damage due to water, traffic, freezing and erosion. Plan work so that subgrade is not left open and exposed to wet weather and construction traffic.

3. Contractor is responsible for planning and overseeing the work so that exposed subgrade is protected from becoming soft, yielding or unsatisfactory after being exposed, requiring over-excavation and structural fill.

4. Contractor is responsible for planning and overseeing the work so that excavated soil and stockpiles are protected from becoming wet and over optimum moisture content, requiring removal and replacement.

B. Protect building and utility structures from damage or collapse due to operation of heavy compaction equipment in too close proximity. Use smaller lifts and hand operated compaction equipment around retaining walls and utility structures.

1. Do not backfill retaining walls supporting floor structure until floor structure and connections are completed per structural drawings, unless specifically approved by Structural Engineer.

C. Protect below-grade waterproofing from damage during earthwork operations.

D. Repair and reestablish grades to specified tolerances where completed or partially completed surfaces become eroded, rutted, settled, or where they lose compaction due to subsequent construction operations or weather conditions.

1. Scarify or remove and replace soil material to depth as required by Geotechnical Engineer; reshape and recompact.

E. Utilities: Refer to Section 02 1725 for requirements related to existing utilities. The Contractor shall protect private and public utilities from damage. Adequate provisions shall be made for maintaining all electrical and other underground facilities encountered during construction. Structures which have been disturbed or damaged by the Contractor shall be satisfactorily restored, unless shown for demolition, upon completion of the work. Unless otherwise specified on plans to remove, Contractor may abandon existing utilities in place provided that:

1. All existing utilities within and 15 feet beyond the proposed building pad and appurtenances are removed unless otherwise noted on Drawings.

2. Pipes serving no purpose for this project, have at least 3 feet of cover at proposed grade and do not conflict with new utilities.

3. Existing utility to be abandoned is filled with sand, grouted and capped.

4. Existing utility trenches are backfilled and compacted to 95% max dry density.

5. Civil Engineer provides prior approval.

F. Existing Pavement: The Contractor shall protect from damage all existing pavement or paved areas scheduled to remain.

G. Access Streets and Roadways: Provide wheel cleaning stations to clean wheels and undercarriage of trucks before leaving site, as necessary to prevent sediment from being tracked onto public streets. If streets are fouled, they must be cleaned immediately in conformance with City of Tacoma, Washington State Department of Ecology, and all governing requirements and regulations.

H. Repair and / or replacement of damaged facilities shall be accomplished at the Contractor's expense.

3.15 CORRECTION OF SUBGRADE SETTLEMENT

A. Where settlement of subgrade occurs at any time, remove and replace as follows:

1. Inform the Architect, Civil Engineer and Geotechnical Engineer immediately of any settlement that appears on the site or in the building.

2. Remove affected / failed pavements or building elements and underlying settled soil, as required by Geotechnical Engineer, until firm, dense and unyielding satisfactory soil is exposed, backfill with structural fill (or other material as required by Engineer) and compact to specified density, and reconstruct removed pavements or building elements to match original construction.

3. Restore appearance, quality and condition of finished surfaces to match adjacent work, and eliminate evidence of restoration to the greatest extent possible.

4. The cost for correction of settlement, including restoration of pavements or building elements, resulting from Contractor's failure to comply with the requirements of the Contract Documents or as required by Geotechnical Engineer shall be borne by the Contractor.

3.16 DISPOSAL OF SURPLUS AND WASTE MATERIALS

A. Disposal of Uncontaminated Soils and Waste: Remove surplus satisfactory soil and waste material, including unsatisfactory soil, trash and debris, and legally dispose of it off Owner's property.

3.17 FIELD QUALITY CONTROL

A. Contractor Quality Control: Employ / assign quality control personnel to monitor the work of this section for conformance to the requirements of the Contract Documents and to good construction practices.

1. Contractor is solely responsible for managing and controlling the quality of the work and conformance with the requirements of the Contract Documents.

2. Contractor shall rely on his own testing, experience and skill in determining what means and methods to employ to achieve specified compacted density and other requirements of this section and not rely solely on test data from Testing Agency.

B. Testing Agency: Owner will engage an independent testing and inspection agency to perform field inspections and tests and prepare test reports, in accordance with Section 01 45000 and the testing requirements noted on the Contract Documents and the Contractor will engage a qualified Geotechnical Engineer to perform periodic field quality-control testing and review of Contractor's work.

1. Tests taken are spot checks only at a given location and shall not be interpreted as representing the quality or integrity of all of the earthwork performed.

2. Test data and reviews shall not be construed as acceptance of the work by the testing agency nor shall it relieve the Contractor of his responsibility to replace non-conforming or failed work.

C. Coordinate and schedule the work to accommodate inspections and testing as follows:

1. **Geotechnical Engineer** shall inspect and approve the following:

a. Exposed subgrade after sod, topsoil and organics have been stripped off but prior to any excavation or fill work being started.

b. Subgrade under pavements and building areas after it has been cut to required elevation but prior to any required fill or base course being placed or building elements being constructed.

c. Fill subgrade under pavements and within the building area after it has been placed and compacted to specified density but prior to any base course being placed or building elements being constructed.

d. Subgrade soils in any utility trench or area of the site that exhibits soft or pumping subgrade, prior to any fill being placed.

2. **Geotechnical Engineer** shall perform special inspections per IBC Chapter 17 for the following:

a. Verify materials below shallow foundations are adequate to achieve the design bearing capacity.

b. Verify excavations are extended to proper depth and have reached proper material.

c. Prior to placement of compacted fill, observe subgrade and verify that site has been prepared properly.

3. **Testing Agency** shall inspect and test the following:

a. Collect soil samples from each different type of existing soil and imported soil and perform Modified Proctor Compaction Test per ASTM D1557 on each sample to determine maximum dry density / weight of sample and optimum moisture content.

b. Excavated subgrade after scarification and recompaction shall be tested prior to placement of any fill.

c. Perform classification and testing of compacted fill materials.

d. Verify use of proper materials, densities and lift thicknesses during placement and compaction of compacted fill.

e. Compaction test each fill layer.

f. Compacted subgrade in bottom of utility trench excavation.

g. Areas required by the Geotechnical Engineer, Civil Engineer, or Architect.

D. Testing will conform to ASTM C136/C136M, ASTM D1556/D1556M, ASTM D1557, ASTM D2167, ASTM D2922 and ASTM D2937ASTM D2937, as applicable. Tests will be performed at the following locations and minimum frequencies:

1. Fill Under Buildings and Pavements and In Utility Trenches: At each compacted fill and backfill layer, at least one test for every 1,000 sq. ft. or less of fill, but in no case fewer than three tests.

E. When testing results indicate that subgrade, fill or backfill has not achieved degree of compaction density specified, scarify and moisten or aerate, or remove and replace soil to depth and width determined by the Geotechnical Engineer; recompact or replace with compacted structural fill and retest, as required to achieve specified compaction density.

END OF SECTION

SECTION 31 2333

UTILITY TRENCHING AND BACKFILL

PART 1 GENERAL

1.01 RELATED DOCUMENTS

A. Drawings and general provisions of the Contract, including General Conditions, Supplementary Conditions and Divisions 00 and 01 Specification Sections, apply to work of this section.

1.02 SECTION INCLUDES

A. Underground Utility Trenching and Backfill.

1.03 REFERENCES

A. References shall be the edition current as of the date of the Contract Documents.

B. ASTM C136/C136M - Standard Test Method for Sieve Analysis of Fine and Coarse Aggregates.

C. ASTM D1556/D1556M - Standard Test Method for Density and Unit Weight of Soil in Place by Sand-Cone Method.

D. ASTM D1557 - Standard Test Methods for Laboratory Compaction Characteristics of Soil Using Modified Effort (56,000 ft-lbf/ft3 (2,700 kN-m/m3)).

E. ASTM D2167 - Standard Test Method for Density and Unit Weight of Soil in Place by the Rubber Balloon Method.

F. ASTM D2922 - Standard Test Methods for Density of Soil and Soil-Aggregate in Place by Nuclear Methods (Shallow Depth).

G. ASTM D2937 - Standard Test Method for Density of Soil in Place by the Drive-Cylinder Method.

H. WSDOT 7-08 - WSDOT STD SPEC - General Pipe Installation Requirements.

I. WSDOT 7-08.3 - WSDOT STD SPEC - Construction Requirements.

J. WSDOT 7-09 - WSDOT STD SPEC - Water Mains.

K. WSDOT 9-03.12(3) - WSDOT STD SPEC - Gravel Backfill for Pipe Zone Bedding.

L. WSDOT 9-03.13 - Backfill for Sand Drains.

M. WSDOT 9-15.18 - WSDOT STD SPEC - Detectable Marking Tape.

1.04 SUBMITTALS

A. Refer to Section 01 3300 for submittal procedures.

B. Provide applicable analysis of each product proposed for use per ASTM C136/C136M. Clearly identify the proposed use for each product.

1.05 DEFINITIONS

A. Suitable Soil: Soils free of organic or other deleterious materials, with moisture content at or near optimum that can be compacted to the specified density.

B. Unsuitable Soils: Soils that contain organic or other deleterious materials or with moisture content above or below optimum that prevents compaction to the specified density.

C. Utilities include on-site underground pipes, conduits, ducts and cables, as well as underground services within buildings.

1.06 PROJECT CONDITIONS

A. Existing site subgrade soils may be moisture sensitive and may not be able to be compacted to the specified density when moisture content is over optimum. Operating equipment on subgrade that has a moisture content over optimum for achieving specified compaction will result in a soft, mushy subgrade that will require drying out and recompaction or excavation and removal from the site and replacing and compacting with new suitable soils at Contractor's expense. It shall be the contractor’s responsibility to schedule work to be accomplished when weather and site conditions are dry and take any measures necessary to protect site soils from becoming unusable or over optimum moisture content or import suitable materials.

B. Some groundwater seepage out of cuts and in excavations may be encountered on this site depending on time of year and weather. Provide sump holes, drainage trenches and pumps to collect, channel and remove this seepage water from the work areas and keep excavations free from standing water.

C. Provide sump holes, drainage trenches and pumps to collect, channel and remove water from the work areas and keep excavations free from standing water.

D. Control the flow, collection, channeling and discharge of water on site to prevent damage to subsoil and excavations, to prevent off-site damage of any type and to conform to all ordinances and laws. Do not allow water to stand in any area where the building or pavement is to be constructed.

E. Existing Improvements: Provide protection necessary to prevent damage to existing improvements not indicated for removal i.e., Bench marks, survey control points, existing structures on adjacent property, sidewalks, paving and curbs. Restore damaged improvements to their original condition at contractor’s expense.

F. Traffic: Conduct operations to ensure minimum interference with roads, streets, walks and other adjacent occupied or used facilities.

G. Existing Utilities: Locate, mark and protect existing utilities as specified in Section 02 1725 prior to start of work.

H. Schedule shutdown of existing utilities affected by work of this section with appropriate utility company and Owner as specified in Section 02 1725 prior to start of work.

1.07 SAFETY CONSIDERATIONS

A. The Contractor is solely responsible for developing a safety plan to protect workers and the public from injury or harm conforming to all Local, State and Federal requirements and for executing and enforcing it on the Project site.

1. Contractor shall consult with their own Geotechnical Engineering expert for determining soil classification relative to safe sloping of soils.

2. Determine safe excavation and dewatering methods, monitor excavations and earthwork operations for safety concerns and provide shoring and other protection as required to protect workers.

3. It is not the intent of the Construction Documents to dictate any unsafe construction means or methods; determine means and methods of construction conforming to their safety plan as required to construct work shown on the Contract Documents.

PART 2 PRODUCTS

2.01 BEDDING AND BACKFILL MATERIALS

A. Pipe bedding and backfill for public utilities shall be per utility purveyor standards / specifications.

B. Pipe Bedding for Culverts, Storm Sewers, and Sanitary Sewers: Conform to WSDOT 9-03.12(3) and WSDOT 7-08.3.

C. Pipe Bedding for Water Services: Conform to City of Everett Standards.

D. Sand Bedding for Polyethylene Pressure Pipe: Conform to WSDOT 9-03.13.

E. Trench Backfill:

1. For general trenching: Backfill material shall conform to WSDOT 7-08; material shall be free of roots, debris, organic matter and other deleterious material.

2. For water trenching: Backfill material shall conform to City of Everett standards and WSDOT 7-09. Material shall be free of roots, debris, organic matter and other deleterious material.

2.02 ACCESSORIES

A. Detectable Warning Tape: Conform to WSDOT 9-15.18; tape shall consist of inert polyethylene plastic that is impervious to all known alkalis, acids, chemical reagents, and solvents likely to be encountered in the soil, with metallic foil core to provide the most positive detection and pipeline locators. The tape shall be color coded and shall be imprinted continuously over its entire length in permanent black ink. The message shall convey the type of line buried below and shall also have the word “Caution” prominently shown. The width of the tape shall be as recommended by the manufacturer for the depth of installation. Color coding of the tape shall be as follows:

1. Water: Blue.

2. Sewer: Green.

3. Storm Water: Generic Orange for Buried Utility Lines.

4. Electrical: Red.

5. Gas, Oil, Fuel: Yellow.

6. Telephone, CATV, Fiber Optic (Communication): Orange.

B. Tracing Wire: 12 gauge copper wire.

PART 3 EXECUTION

3.01 COORDINATION

A. Review, coordinate and accommodate work of other sections that interface with, affect or are affected by the work of this section so as to facilitate the execution of the overall work of this project in a coordinated and efficient manner.

B. Review and coordinate horizontal and vertical layout of each utility to accommodate new and existing utilities, review conflicts with Architect / Civil Engineer prior to start of trenching.

C. Coordinate trenching operations with construction of other underground utilities and with buildings to prevent damage to work and out of sequence construction.

3.02 HORIZONTAL AND VERTICAL CONTROL

A. Employ a Land Surveyor registered in the State of Washington to lay out and stake the Work and provide horizontal and vertical control; refer to Section 01 7000 for additional requirements.

1. Locate and protect survey control and reference points.

2. Provide field engineering services. Establish elevations, lines and levels, utilizing recognized engineering survey practices.

B. Lay out and stake utility lines prior to starting and trenching.

3.03 PREPARATION

A. Locate and mark existing utilities as required in Section 02 1725. Review and resolve any conflicts between utilities with Civil Engineer prior to starting any trenching work.

B. Schedule shutdown of existing utilities affected by trenching operations as specified in Section 02 1725.

C. Protect structures, utilities, sidewalks, pavements and other facilities from damage caused by trenching operations.

D. Confirm that erosion-control measures are in place to prevent erosion or displacement of soils and discharge of soil-bearing water runoff or airborne dust to adjacent properties and walkways.

3.04 DEWATERING

A. Obtain necessary permits for dewatering.

B. Prevent surface water from entering trenches; prevent water from ponding on trench bottom subgrade and from flooding Project site and surrounding area.

C. Protect subgrades from softening, undermining, washout and damage by rain or water accumulation.

1. Reroute surface water runoff away from trenching. Do not allow water to accumulate in trench bottoms.

2. Install a dewatering system as required to keep trench bottoms dry and to convey ground water away from trenches. Maintain until dewatering is no longer required.

D. Refer to Section 31 2500 for disposal.

3.05 EXCAVATION FOR UTILITY TRENCHES

A. Excavate trenches to required gradients, lines, depths and elevations in conformance with details shown on the Drawings.

B. Excavate trenches to widths required to provide a working clearance on each side of pipe, conduit or utility.

C. Trench Bottoms: Excavate trenches 6-inches deeper than bottom of pipe elevation to allow for bedding course. Hand excavate for bell of pipe.

1. Compact bottom of trench to a uniformly firm and unyielding condition prior to placing bedding or utility in trench.

2. Fill over-excavated areas with trench backfill and compact to specified density.

3. Over-excavate any soft or yielding areas in trench subgrade and replace with trench backfill compacted to specified density.

4. In wet weather or wet site conditions, utilize means and methods that will avoid trench bottom subgrade being disturbed or over optimum moisture content making compaction to a firm and unyielding condition impossible.

D. Excavate and remove any boulders or debris uncovered (partially or completely) during trenching and remove from the site, backfill any resulting voids in subgrade with trench backfill compacted to specified density.

E. Protection of Excavated Material: When excavated soil is suitable structural fill and intended for use as backfill or structural fill, protect from becoming over optimum moisture content by covering and protecting from weather / water.

F. Geotechnical Engineer shall inspect any trench that exhibits soft or yielding subgrade prior to placing bedding or utility in trench.

1. Over-excavate unsuitable subgrade soils as required by Engineer and replace with trench backfill compacted to specified density.

3.06 STORAGE OF STOCKPILED MATERIALS

A. Stockpile imported materials and excavated native soil materials separately without intermixing. Place, grade and shape stockpiles to drain surface water. Cover to prevent windblown dust and erosion.

1. Temporary Stockpiles: Cover with waterproof sheeting when required to prevent moisture sensitive soil from becoming too wet to achieve specified compaction. Secure sheeting with stakes and sandbags.

2. Stockpile soil materials well away from edges of excavations or the crest of any slopes.

3. Stockpiles shall not be placed on pervious pavement or in raingarden areas.

4. Stockpile soil materials downstream of infiltration ponds.

3.07 BACKFILL

A. Bedding: Place and compact required type of bedding on firm and unyielding undisturbed or compacted trench bottom subgrade.

1. Shape bedding to provide continuous support for bells, joints and barrels of pipes and for joints, fittings and bodies of conduits.

2. After placing each utility section into proper position, alignment and grade, place bedding around utility and carefully compact material around pipe haunches and bring bedding evenly up on both sides and along the full length of utility to avoid damage or displacement of utility system.

3. Backfill over utility with bedding to depth shown on utility trench details shown on Drawings.

B. Trench Backfill:

1. General Trenching: Conform to WSDOT 7-08.

2. Water Service Trenching: Conform to City of Everett Standards and WSDOT 7-09.

C. Coordinate backfilling to allow utilities testing and inspection.

D. Fill voids with approved backfill materials while shoring and bracing, and as sheeting is removed.

E. Place and compact final backfill material to final subgrade.

F. Warning Tape: Install continuous detectable warning tape directly above utilities, 12-inches below finished grade, 6-inches below subgrade under pavements and slabs or 18-inches above the pipe crown (whichever is deeper).

3.08 MOISTURE CONTROL OF BACKFILL

A. Uniformly moisten or aerate trench subgrade and each subsequent backfill layer before compaction to the optimum moisture content to achieve specified density.

1. Provide equipment for applying water uniformly to the subgrade.

2. Do not place backfill or fill material on surfaces that are muddy or frozen.

3. Remove and replace, or scarify and air-dry otherwise suitable material that exceeds optimum moisture content and is too wet to compact to specified density.

4. In wet weather or site conditions, protect exposed subgrade from becoming too wet to allow compaction to a firm and unyielding condition and utilize backfill material that is not moisture sensitive.

3.09 COMPACTION OF BACKFILLS AND FILLS

A. Place backfill materials to the following percentage of maximum dry density as determined by the ASTM D1557 (Modified Proctor) test procedure:

1. Utility Trench Backfill: 95% min. (in paved areas), 90% min. (in unpaved areas).

B. Range of Moisture Contents for Compaction: +/- 2%.

C. Protect utility line from damage during compaction.

D. Failure to Achieve Compaction Density: Contractor shall remove and replace any backfill material that fails to meet the specified compaction density or that settles after project completion at their own expense.

3.10 DUST CONTROL

A. Control and prevent the production of airborne dust due to wind or construction equipment traffic at any time during construction by watering the work area and site, comply with all local and State air quality regulations.

B. Do not permit conditions on the site that would allow airborne dust resulting from the work of this project to drift onto adjacent properties.

3.11 PROTECTION

A. Protection:

1. Protect backfilled areas from damage due to water, traffic, freezing and erosion.

2. Protect exposed subgrade in trench bottoms from damage due to water, traffic, freezing and erosion. Plan work so that trenches are not left open and exposed.

3. Contactor is responsible for planning and overseeing the work so that trench subgrade is protected from becoming soft, yielding or unsuitable after being exposed, requiring over-excavation and structural fill.

4. Contactor is responsible for planning and overseeing the work so that excavated soil and spoils piles are protected from becoming wet and over optimum moisture content, requiring removal and replacement.

B. Protect building and utility structures from damage or collapse due to operation of heavy compaction equipment in too close proximity. Use smaller lifts and hand operated compaction equipment around retaining walls and utility structures.

C. Protect below-grade waterproofing from damage during earthwork operations.

D. Repair and reestablish grades to specified tolerances where completed or partially completed surfaces become eroded, rutted, settled, or where they lose compaction due to subsequent construction operations or weather conditions.

1. Scarify or remove and replace soil material to depth as required by Geotechnical Engineer; reshape and re-compact.

E. Utilities: Refer to Section 02 1725 for requirements related to existing utilities. The Contractor shall protect from damage all private and public utilities. Adequate provisions shall be made for maintaining all electrical and other underground facilities encountered during construction. Structures which have been disturbed or damaged by the Contractor shall be satisfactorily restored, unless shown for demolition, upon completion of the work.

F. Existing Pavement: The Contractor shall protect from damage all pavement or paved areas scheduled to remain.

G. Access Streets and Roadways: Provide wheel cleaning stations to clean wheels and undercarriage of trucks before leaving site, as necessary to prevent dirt from being carried onto public streets. If streets are fouled, they must be cleaned immediately in conformance with City of Tacoma, Washington State Department of Ecology, and all governing requirements and regulations.

H. Repair and / or replacement of damaged facilities will be accomplished at the Contractor's expense.

3.12 CORRECTION OF SUBGRADE SETTLEMENT

A. Where settlement of subgrade occurs at any time, remove and replace as follows:

1. Inform the Architect, Civil Engineer and Geotechnical Engineer immediately of any settlement that appears on the site or in the building.

2. Remove affected / failed pavements or building elements and underlying settled soil, under the direction of Geotechnical Engineer if required, until firm, dense and unyielding suitable soil is exposed, backfill with structural fill (or other material as required by Geotechnical Engineer) and compact to specified density, and reconstruct removed pavements or building elements to match original construction.

3. Restore appearance, quality and condition of finished surfaces to match adjacent work, and eliminate evidence of restoration to the greatest extent possible.

4. The cost for correction of settlement, including restoration of pavements or building elements, resulting from Contractor's failure to comply with the requirements of the Contract Documents or with the directions from Geotechnical Engineer shall be borne by the Contractor.

3.13 DISPOSAL OF SURPLUS AND WASTE MATERIALS

A. Disposal of Uncontaminated Soils and Waste: Remove surplus satisfactory soil and waste material, including unsatisfactory soil, trash and debris, and legally dispose of it off Owner's property.

3.14 FIELD QUALITY CONTROL

A. Contractor Quality Control: Employ / assign quality control personnel to monitor the work of this section for conformance to the requirements of the Contract Documents and to good construction practices.

1. Contractor is solely responsible for managing and controlling the quality of the work and conformance with the requirements of the Contract Documents.

2. Contractor shall rely on his own testing, experience and skill in determining what means and methods to employ to achieve specified compacted density and other requirements of this section and not rely solely on test data from Testing Agency.

B. Owner will engage an independent testing and inspection agency to perform field inspections and tests and prepare test reports, in accordance with Section 01 4500 and the testing requirements noted on the Contract Documents and the Contractor will engage a qualified Geotechnical Engineer to perform periodic field quality-control testing and review of Contractor's work.

1. Tests taken are spot checks only at a given location and shall not be interpreted as representing the quality or integrity of all of the work performed.

2. Test data and reviews shall not be construed as acceptance of the work by the testing agency nor shall it relieve the Contractor of his responsibility to replace non-conforming or failed work.

C. Coordinate and schedule the work to accommodate inspections and testing as follows:

1. Geotechnical Engineer shall inspect and approve the following:

a. Subgrade soils in any utility trench or area of the site that exhibits soft or yielding subgrade, prior to any backfill being placed.

b. Fill subgrade in any trench under pavements or within the building area after it has been placed and compacted to specified density but prior to any base course being placed or building elements being constructed.

2. Testing Agency shall inspect and test the following:

a. Collect soil samples from each different type of existing soil and imported soil and perform Modified Proctor Compaction Test per ASTM D1557 on each sample to determine maximum dry density / weight of sample and optimum moisture content.

b. Each backfill layer, including compaction of trench bottom subgrade disturbed during excavation.

c. Areas required by the Geotechnical Engineer or Architect.

D. Testing agency will test compaction of soils in place according to ASTM D1556/D1556M, ASTM D1557, ASTM D2167, ASTM D2922, and ASTM D2937, as applicable. Tests will be performed at the following locations and minimum frequencies:

1. Utility Trenches: At each compacted fill and backfill layer, at least one test for every 1,000 sq. ft. or less of fill, but in no case fewer than three tests.

E. Provide trench safety provisions for safety of Geotechnical Engineer and Testing Agency personnel during inspections and testing in trenches, including, but not limited to, providing access ladders, ditch boxes and shutting down equipment operation while personnel are in the trench.

F. When testing agency reports that subgrade or backfill has not achieved compaction density specified, scarify and moisten or aerate, or remove and replace soil to depth and width determined by the Geotechnical Engineer; recompact or replace with compacted backfill and retest, as required to achieve specified compaction density.

END OF SECTION

SECTION 31 2500

EROSION AND SEDIMENT CONTROL

PART 1 GENERAL

1.01 RELATED DOCUMENTS

A. Drawings and general provisions of the Contract, including General Conditions, Supplementary Conditions and Divisions 00 and 01 Specification Sections, apply to work of this section.

1.02 SECTION INCLUDES

A. Erosion and Sediment Control measures for site.

B. Control of Temporary Stormwater Runoff.

C. Maintaining Streets in Clean Condition.

D. Prevention of Erosion of Exposed Soil.

E. Monitor, maintain and supplement silt control and stormwater runoff control measures.

F. Prevention of Airborne Dust.

G. Compliance with the current State Construction Stormwater General Permit / NPDES Permit.

H. Maintenance and repair of erosion control measures.

I. Removal of temporary erosion and sediment control measures from the site.

1.03 REFERENCES

A. References shall be the edition current as of the date of the Contract Documents.

B. ASTM D4355/D4355M - Standard Test Method for Deterioration of Geotextiles by Exposure to Light, Moisture, and Heat in a Xenon Arc-Type Apparatus.

C. ASTM D4491/D4491M - Standard Test Methods for Water Permeability of Geotextiles by Permittivity.

D. ASTM D4632/D4632M - Standard Test Method for Grab Breaking Load and Elongation of Geotextiles.

E. ASTM D4751 - Standard Test Methods for Determining Apparent Opening Size of a Geotextile.

F. WSDOT 8-01.3(2) - Temporary Seeding and Mulching.

G. WSDOT 9-03.12(4) - Gravel Backfill for Drains.

H. WSDOT 9-13.1(5) - Quarry Spalls.

I. WSDOT 9-14.5(1) - Straw.

J. WSDOT 9-14.6(9) - High Visibility Silt Fence.

K. WSDOT 9-33.2 Table 6 - Geotextile for Temporary Silt Fence.

1.04 SUBMITTALS

A. Refer to Section 01 3300 for submittal procedures.

1.05 DESIGN CRITERIA

A. Erosion control measures shall be designed and constructed in accordance with the Local Storm Manual, the Washington State Department of Ecology Stormwater Management Manual for Western Washington, dated July 2019, and any other applicable local regulations.

1.06 DURATION

A. Maintain erosion and sediment control measures needed to perform the Work of this Contract, including periods when construction activities are reduced or shut down.

B. Contractor shall maintain erosion and sediment control measures until hydroseeded grass and landscaped areas have become established and site soils are stabilized to prevent any site erosion or turbidity in site stormwater runoff.

1.07 PROJECT CONDITIONS

A. Contractor shall employ the materials, equipment, procedures and management expertise necessary to accomplish erosion and sediment control during wet weather while conforming to the requirements of the Contract Documents.

B. Existing site subgrade soils may be moisture sensitive. Operating equipment on subgrade that has a moisture content over optimum will result in a soft, mushy subgrade that will require drying out and recompaction or excavation and removal from the site and replacing and compacting with new suitable soils at Contractor's expense. If project schedule permits, schedule work to be accomplished when weather and site conditions are dry; otherwise utilize wet weather materials and procedures and take any measures necessary to protect site soils from becoming unsuitable, unusable or over optimum moisture content.

C. Control the flow, collection, channeling and discharge of water on site to prevent damage to subsoil and excavations, to prevent off-site damage of any type and to conform to all ordinances and laws.

D. Existing Improvements: Provide protection necessary to prevent damage to existing improvements not indicated for removal. i.e. Bench marks, survey control points, existing structures on adjacent property, sidewalks, paving, and curbs. Restore damaged improvements to their original condition.

E. Traffic: Conduct operations to ensure minimum interference with roads, streets, walks, and other adjacent occupied or used facilities.

F. Existing Utilities: Locate, mark and protect existing utilities as specified in Section 02 1725 prior to start of work.

1.08 MAINTENANCE

A. Monitor and maintain erosion and sediment control measures installed for the duration of the project.

1. Repair or replace any control measures that become damaged or ineffective.

2. Take measures to prevent any erosion or sediment control problems from occurring both on the project site and off site.

1.09 SAFETY CONSIDERATIONS

A. The Contractor is solely responsible for developing a safety plan to protect workers and the public from injury or harm conforming to all Local, State and Federal requirements and for executing and enforcing it on the Project site.

1. Contractor shall consult with their own Geotechnical Engineering expert for determining soil classification relative to safe sloping of soils.

2. Determine safe excavation and dewatering methods, monitor excavations and earthwork operations for safety concerns and provide shoring and other protection as required to protect workers.

3. It is not the intent of the Construction Documents to dictate any unsafe construction means or methods; determine means and methods of construction conforming to their safety plan as required to construct work shown on the Contract Documents.

1.10 NPDES CONSTRUCTION STORMWATER GENERAL PERMIT RESPONSIBILITIES AND OBLIGATIONS

A. Responsibility: The Contractor is solely responsible for compliance to the State of Washington Department of Ecology Construction Stormwater General Permit.

B. Certified Erosion and Sediment Control Lead (CESCL): A Certified Erosion and Sediment Control Lead (CESCL) is required for this project. The Contractor is required to identify CESCL on the Transfer of Coverage form. Any changes to the CESCL and / or their contact information must be updated with the DOE. CESCL must maintain current certification from project award through filing of the Notice of Termination (NOT). The CESCL must fulfill all requirements of the NDPES Permit for this project, including but not limited to, inspection, monitoring, management, maintenance, and documentation in accordance with the Storm Water Pollution Prevention Plan (SWPPP) and in compliance with Coverage under the Department of Ecology NPDES Construction Stormwater General Permit.

C. Permit Coverage Changes / Updates / Modifications: Any changes / updates and / or modifications to the Permit shall be the responsibility of the Contractor. The Contractor must notify Owner, Architect and Civil Engineer immediately regarding any changes to permit coverage.

D. Monitoring and Reporting: The Contractor identified CESCL will be responsible for collecting samples and reporting results to the Department of Ecology. Currently the DOE requires electronic Discharge Monitoring Reports.

E. Fines: All fines issued by DOE for this project shall be paid in full by the Contractor.

F. Fees: Annual permit fees will be paid by the Owner. Contractor is responsible to coordinate with Owner for payment.

G. Filing of Notice of Termination: The Contractor is responsible for filing the Notice of Termination (NOT) to close out project Coverage under the Construction Stormwater General Permit. The NOT may not be filed until all site improvements are complete to the satisfaction of the Owner and design team and the site is sufficiently stabilized per Construction Stormwater General Permit. The Contractor is solely responsible for determining when the site is sufficiently established to file the Notice of Termination (NOT).

PART 2 PRODUCTS

2.01 SILT FENCES

A. Filter fabric shall conform to WSDOT 9-33.2 Table 6 with Geotextile Properties tested and conforming to the following:

1. AOS:

a. Test Method: ASTM D4751.

b. Geotextile Property Requirements:

1) _____ mm maximum for slit film wovens (#30 sieve).

2) _____ mm maximum for all other geotextile types (#50 sieve) 0.15 mm minimum (#100 sieve).

2. Water Permittivity:

a. Test Method: ASTM D4491/D4491M .

b. Geotextile Property Requirements: 0.02 sec-1 min.

3. Grab Failure Strain, Minimum in machine direction only:

a. Test Method: ASTM D4632/D4632M.

b. Geotextile Property Requirements: 100 pounds minimum.

4. Ultraviolet (UV) Radiation Stability:

a. Test Method: ASTM D4355/D4355M.

b. Geotextile Property Requirements: 70% strength retained minimum after 500 hours in weatherometer.

2.02 HYDROSEED

A. Hydroseeding for erosion control shall comply with the requirements of WSDOT 8-01.3(2); provide the following Seed Mix:

1. Perennial Rye Grass: 40 % of mix; 90% purity; 90% germination.

2. Creeping Red Fescue: 40 % of mix; 90% purity; 90% germination.

3. Preinoculated White Dutch Clover: 10 % of mix; 95% purity; 90% germ.

4. Highland Bent Grass: 10 % of mix; 90% purity; 90% germination.

B. Fertilizer: Add 10-20-20 fertilizer to the hydroseed mix.

2.03 STRAW MULCHING

A. Straw shall conform to WSDOT 9-14.5(1).

2.04 PLASTIC SHEETING

A. Clear plastic sheeting shall be minimum 6-mil thick, polyethylene film.

B. Sandbags shall consist of clean washed sand in a woven polyethylene sack.

C. Stakes: Wood stakes of size and length required to secure sandbags and rope in place.

D. Rope: Polyethylene or nylon rope, 1/4-inch diameter minimum, or larger size as required to secure plastic sheeting and sandbags in place.

2.05 CATCH BASIN INLET PROTECTION

A. Catch basin inlet protection shall conform to the details provided on the Drawings.

2.06 HIGH VISIBILITY FENCING

A. Fencing shall meet the requirements of WSDOT 9-14.6(9).

2.07 PIPE MATERIALS

A. Pipe materials shall be as specified in Section 33 4000.

2.08 ROCK MATERIALS

A. Quarry spalls shall meet the requirements of WSDOT 9-13.1(5).

B. Washed gravel shall meet the requirements of WSDOT 9-03.12(4).

C. Pea Gravel: 3/8-inch minus clean washed pea gravel.

2.09 WATER

A. Provide water for dust control, including the following:

1. Water truck with provisions for uniformly spreading / spraying water.

2. Fire hose and spray nozzle with fittings and temporary water meter setup for connection to fire hydrant.

3. Connections, fittings and equipment required for connection to water source.

4. Make all arrangements and pay any fees associated with connection to water source, cost of water, etc. Provide, maintain, and pay for suitable quality temporary water service or source required for construction operations. Pay all costs of connection, piping and / or trucking as required to perform the work.

PART 3 EXECUTION

3.01 COORDINATION

A. Review, coordinate and accommodate work of other sections that interface with, affect or are affected by the work of this section so as to facilitate the execution of the overall work of this project in a coordinated and efficient manner.

B. Coordinate exact layout of erosion and sediment control structures to facilitate construction operations and work on the site.

3.02 GENERAL

A. During construction the runoff of stormwater and wastewater flows shall be controlled and treated to minimize water quality impacts. The Contractor shall plan and execute the work in a manner which protects the project, and downstream waterways.

B. Stormwater from disturbed areas within the limits of disturbance shall be collected and treated before releasing. The extent of erosion control measures required will depend on the extent of the Contractor's earthwork and ground cover disturbance and resulting erosion potential. The Contractor is responsible for meeting water quality criteria / all stormwater discharge requirements. The Owner may direct the Contractor to enhance erosion control measures it deems to be inadequate.

C. Conform to the requirements for coverage under the Construction Stormwater General Permit administered by the Washington State Department of Ecology.

3.03 TEMPORARY CONVEYANCE SYSTEMS

A. Ditches, pipes, swales, berms, sandbag walls, sumps and other means shall be employed to collect stormwater from the construction area. Materials excavated from swale construction may be used to construct berms.

B. Ditches and swales shall be scarified, seeded and rolled where used for temporary drainage conveyance.

3.04 GROUND COVER

A. Do not clear any areas until construction is ready to begin. Disturb only the minimum area necessary to accomplish the work. Cover all disturbed areas with plastic sheeting during any stoppages of work. Protect all disturbed areas, including cleared, stripped, cut, fill, or other areas of reduced plant cover or bare dirt caused by work in this contract, from erosion. Protection shall include plastic sheeting, erosion control matting, temporary seeding, and straw mulch.

B. Slopes (2 Horizontal to 1 Vertical and Steeper): After earthwork and grading has been completed, cover cut and fill slopes that are 2H:1V and steeper with plastic sheeting secured with stakes and sandbags set on a maximum 20 foot grid or as required to secure sheeting and prevent it from blowing away.

C. Slopes (Flatter than 2 Horizontal to 1 Vertical): Hydroseed slopes that are flatter than 2H:1V as specified herein.

3.05 STOCKPILE PROTECTION

A. Temporary stockpile slopes shall not exceed 2H:1V.

B. Grade slopes of stockpile uniformly smooth with a slightly concave shape to prevent hollow spots that would allow the plastic sheeting cover to ripple and flap in the wind.

C. Cover stockpiles with plastic sheeting; install sheeting to fit tight to shape of stockpile free of wrinkles or loose areas; overlap seams two feet and tape down exposed edges continuously.

1. Install sheeting in largest sections possible with minimum number of seams.

2. Secure plastic sheet with stakes, rope and sandbags to prevent it from blowing away or from any seam from coming loose.

3. Space stakes and sandbags at no more than a 15 foot grid or as required to secure sheeting.

4. Secure each sandbag with a stake; run rope between each stake (under sandbags).

5. Place stakes and sandbags along all seams.

6. Entire installation shall withstand high winds for an entire winter without the plastic sheeting coming loose or blowing away.

D. Stockpile imported materials and excavated native soil materials well away from edges of excavations or the crest of any slopes.

1. Stockpiles shall not be placed on pervious pavement or in raingarden areas.

2. Stockpile soil materials downstream of pervious pavement and raingarden areas.

3.06 EARTHWORK

A. Do not cause foreign or waste material to enter surface waters. Materials shall be carefully excavated and moved to an approved spoil or waste area.

B. Earthwork slopes shall be left in a condition that will minimize erosion during rainfall. This includes temporary erosion control as specified herein.

3.07 DUST CONTROL

A. Control and prevent the production of airborne dust due to wind or construction equipment traffic at any time during construction by watering the work area and site, comply with all local and State air quality regulations.

B. Do not permit conditions on the site that would allow airborne dust resulting from the work of this project to drift onto adjacent properties.

C. Wet down unpaved roadways used for construction traffic to prevent dust.

3.08 HYDROSEEDING

A. Hydroseed bare exposed soil disturbed by the work of this project except in the following areas:

1. Slopes covered with plastic sheeting.

B. Hydroseed mix shall be applied at the following rates:

1. Seed mix at rate of 100 pounds per acre.

2. Fertilizer at rate of 500 pounds per acre.

3. Mulch at rate of 2000 pounds per acre.

4. Soil stabilizer at rate of 40 pounds per acre.

C. Apply water to hydroseeded areas as required for seeds to germinate, root and grow vigorously; maintain hydroseeded areas through Final Completion.

3.09 SITE RESTORATION

A. As soon as practical after completion of a portion of the Work, or when a work or waste area is no longer required, commence site restoration.

3.10 PROTECTION, MAINTENANCE AND REPAIR

A. Maintain and repair erosion control facilities throughout construction until Final Completion and leave in place for the next phase contractor's use.

B. Protection:

1. Where possible, maintain natural / existing vegetation for silt control.

2. Prevent silt-laden water from leaving the site or from entering offsite storm sewer system.

3. Stabilize slope, cut or fill areas where work is stopped for more than 30 days by mulching, polyethylene sheeting or other method to prevent erosion and sediment transport.

4. Keep pavements, roadways, sidewalks, and emergency access clean from construction activities. Keep paved areas clean using mechanical sweeping equipment and hand tools as applicable; pavement washing is not allowed.

5. Keep pervious pavement clear of any stockpiled material.

6. Prevent vehicular traffic from construction vehicles and equipment on pervious pavement.

C. Supplementary Measures: Provide additional silt and erosion control measures as required to protect soils and prevent silt-laden runoff from leaving the project site.

D. Maintenance: Monitor and maintain temporary silt and erosion control measures for the duration of the project.

E. Inspection: Inspect the entire system to ensure proper operation a minimum of once per week, during and after storms and prior to weekends and holidays.

3.11 REMOVAL

A. Remove temporary erosion control facilities only after site soils are stabilized to prevent any erosion or turbidity in stormwater runoff from the site during a heavy rain storm event.

3.12 FIELD QUALITY CONTROL

A. Contractor Quality Control: Employ / assign quality control personnel to monitor the work of this section for conformance to the requirements of the Contract Documents and to good construction practices.

1. Contractor is solely responsible for managing and controlling the quality of the work and conformance with the requirements of the Contract Documents.

END OF SECTION

SECTION 32 1100

BASE COURSE

PART 1 GENERAL

1.01 RELATED DOCUMENTS

A. Drawings and general provisions of the Contract, including General Conditions, Supplementary Conditions and Divisions 00 and 01 Specification Sections, apply to work of this section.

1.02 SECTION INCLUDES

A. Aggregate Base for Asphalt Pavements.

B. Aggregate Base for Cement Concrete Pavements.

1.03 REFERENCES

A. References shall be the edition current as of the date of the Contract Documents.

B. ASTM D1557 - Standard Test Methods for Laboratory Compaction Characteristics of Soil Using Modified Effort (56,000 ft-lbf/ft3 (2,700 kN-m/m3)).

C. ASTM D2922 - Standard Test Methods for Density of Soil and Soil-Aggregate in Place by Nuclear Methods (Shallow Depth).

D. WSDOT 9-03.9(3) - WSDOT STD SPEC - Crushed Surfacing.

1.04 SUBMITTALS

A. Refer to Section 01 3300 for submittal procedures.

B. Provide applicable analysis of each product proposed for use. Clearly identify the proposed use for each product.

1.05 WEATHER LIMITATIONS

A. Do not place aggregate when base surface temperature is less than 35 degrees F, nor when air temperature is below 35 degrees F. Do not place aggregate when surface is wet or frozen. Do not place aggregate when weather conditions are unfavorable otherwise.

PART 2 PRODUCTS

2.01 AGGREGATE BASE COURSE

A. Crushed Surfacing Top Course (CSTC) and Crushed Surfacing Base Course (CSBC) conforming to WSDOT 9-03.9(3).

PART 3 EXECUTION

3.01 COORDINATION

A. Review, coordinate and accommodate work of other trades that interface with, affect or are affected by the work of this section so as to facilitate the execution of the overall Work of this project in a coordinated and efficient manner.

3.02 HORIZONTAL AND VERTICAL CONTROL

A. Employ a Land Surveyor registered in the State of Washington to lay out and stake the Work and provide horizontal and vertical control; refer to Section 01 7000 for additional requirements.

1. Locate and protect survey control and reference points.

2. Provide field engineering services. Establish elevations, lines and levels, utilizing recognized engineering survey practices.

B. Lay out and stake the work area prior to starting earthwork.

3.03 EXAMINATION

A. Verify that compacted subgrade and granular base is dry, compacted to specified density and ready to support paving and imposed loads.

B. Proof-roll sub-base to check for unstable areas or areas requiring additional compaction.

C. Verify gradients and elevations of base are correct.

D. Placement of base course indicates acceptance of the subgrade by installer.

3.04 INSTALLATION – TOP COURSE AND BASE COURSE

A. Place granular base course over properly compacted subgrade to compacted thickness shown on Drawings.

B. Grade crushed surfacing base course accurately for proper slope and elevation.

C. Compact crushed surfacing base course to 95% of maximum dry density as determined by ASTM D1557 (Modified Proctor).

D. Check the elevation, surface tolerances and slopes of compacted crushed surfacing base course using a level and 10' straightedge to confirm proper flatness and drainage. Regrade and recompact any areas that do not conform at the Contractor’s expense.

3.05 FIELD QUALITY CONTROL

A. Contractor Quality Control: Employ / assign quality control personnel to monitor the work of this section for conformance to the requirements of the Contract Documents and to good construction practices.

1. Contractor is solely responsible for managing and controlling the quality of the work and conformance with the requirements of the Contract Documents.

2. Contractor shall rely on his own testing, experience and skill in determining what means and methods to employ to achieve specified compacted density and other requirements of this section and not rely solely on test data from Testing Agency.

B. Owner will engage an independent testing and inspection agency to perform field inspections and tests and prepare test reports, in accordance with Section 01 4500 and the testing requirements noted on the Contract Documents and the Contractor will engage a qualified Geotechnical Engineer to perform periodic field quality-control testing and review of Contractor's work.

1. Tests taken are spot checks only at a given location and shall not be interpreted as representing the quality or integrity of all of the work performed.

2. Test data and reviews shall not be construed as acceptance of the work by the testing agency nor shall it relieve the Contractor of his responsibility to replace non-conforming or failed work.

C. Coordinate and schedule the work to accommodate inspections and testing as follows:

1. Geotechnical Engineer shall provide recommendations to achieve compaction density in the event of failure to obtain compaction density

2. Testing Agency shall inspect and test the following:

a. Subgrade prior to placement of base course or paving.

b. Base and top course compaction density.

c. Areas required by the Geotechnical Engineer.

D. Testing agency will test compaction of base course in place according to ASTM D1557 and ASTM D2922, as applicable. Tests will be performed at the following locations and minimum frequencies:

1. Base and Top Course under Pavement: At each compacted layer, at least one test for every 1,000 sq. ft. or less, but in no case fewer than three tests.

E. When Geotechnical Engineer and / or testing agency reports that subbase has not achieved degree of compaction density specified, regrade and recompact any areas that do not conform at the Contractor's expense.

END OF SECTION

SECTION 32 1123

UNDERSLAB CAPILLARY BREAK

PART 1 GENERAL

1.01 RELATED DOCUMENTS

A. Drawings and general provisions of the Contract, including General Conditions, Supplementary Conditions and Divisions 00 and 01 Specification Sections, apply to work of this section.

1.02 SECTION INCLUDES

A. Underslab Capillary Break under Concrete Slabs on Grade.

1.03 SUBMITTALS

A. Refer to Section 01 3300 for submittal procedures.

B. Provide applicable analysis of each product proposed for use. Clearly identify the proposed use for each product.

PART 2 PRODUCTS

2.01 MATERIALS

A. Capillary Break Material: Clean washed crushed rock supplied by Miles Sand And Gravel Company *Product #1242* or similar equivalent material and conforming to the following gradation (percentages are by weight):

100% passing the 3/4-inch screen

96% maximum passing the 5/8-inch screen

66% maximum passing the 1/2-inch screen

27% maximum passing the 3/8-inch screen

6% maximum passing the 1/4-inch screen

4% maximum passing the #4 screen

1% maximum passing the #200 screen

PART 3 EXECUTION

3.01 COORDINATION

A. Review, coordinate and accommodate work of other sections that interface with, affect or are affected by the work of this section so as to facilitate the execution of the overall Work of this project in a coordinated and efficient manner.

3.02 EXAMINATION

A. Identify required lines, levels, contours, and datum locations.

B. Inspect subgrade for conformance with specified compaction and required surface elevation.

C. Confirm that subgrade has been proof rolled and is approved by Geotechnical Engineer for placement of capillary break.

D. Do not start installation until underslab electrical conduit has been installed.

E. Do not start installation of capillary break until subgrade condition is acceptable, start of installation indicates acceptance of subgrade.

3.03 PREPARATION

A. Prior to placing any capillary break, remove any standing water and unsuitable wet subgrade soil (soil that is over optimum moisture content and has become plastic, mushy or disturbed and cannot be recompacted to specified density). Remove unsuitable soil off site.

B. Until ready to place capillary break, maintain excavations and prevent loose soil from falling into excavation.

3.04 CAPILLARY BREAK PLACEMENT

A. Fill to depth indicated on Drawings, but not less than 4-inches (depth indicated is the compacted depth).

B. Employ placement and compaction methods that do not disturb or damage other work.

1. Compact with minimum 3 passes of a vibration plate compactor or until gravel is tightly interlocked and surface is firm and unyielding.

3.05 PROTECTION

A. After placement, keep capillary break clean and protect from contamination with site soil or construction debris.

3.06 FIELD QUALITY CONTROL

A. Contractor Quality Control: Employ / assign quality control personnel to monitor the work of this section for conformance to the requirements of the Contract Documents and to good construction practices.

1. Contractor is solely responsible for managing and controlling the quality of the work and conformance with the requirements of the Contract Documents.

END OF SECTION

SECTION 32 1216

ASPHALT PAVING

PART 1 GENERAL

1.01 RELATED DOCUMENTS

A. Drawings and general provisions of the Contract, including General Conditions, Supplementary Conditions and Divisions 00 and 01 Specification Sections, apply to work of this section.

1.02 SECTION INCLUDES

A. Asphalt Paving.

1.03 REFERENCES

A. References shall be the edition current as of the date of the Contract Documents.

B. ASTM D1556/D1556M - Standard Test Method for Density and Unit Weight of Soil in Place by Sand-Cone Method.

C. ASTM D1557 - Standard Test Methods for Laboratory Compaction Characteristics of Soil Using Modified Effort (56,000 ft-lbf/ft3 (2,700 kN-m/m3)).

D. ASTM D2167 - Standard Test Method for Density and Unit Weight of Soil in Place by the Rubber Balloon Method.

E. WSDOT 5-04 - WSDOT STD SPEC - Hot Mix Asphalt.

F. WSDOT 9-03.8 - WSDOT STD SPEC - Aggregates for Hot Mix Asphalt.

1.04 SUBMITTALS

A. Refer to Section 01 3300 for submittal procedures.

B. Applicable analysis of each product proposed for use. Clearly identify the proposed use for each product.

1.05 QUALITY ASSURANCE

A. Perform work in accordance with WSDOT Standard Specification.

B. Mixing Plant: Conform to WSDOT Standard Specification.

C. Obtain materials from same source throughout.

1.06 PROJECT CONDITIONS

A. Weather Conditions:

1. Do no paving work when raining or when subgrade or base has free water on the surface or does not meet compaction requirements; suspend operations until surfaces are adequately dry.

2. Do not place asphalt when ambient air or base surface temperature is less than 40 degrees F, or surface is wet or frozen.

B. Traffic: Conduct paving operations to ensure minimum interference with roads, streets, walks, and other adjacent occupied or used facilities.

C. Existing Utilities: Locate, mark and protect existing utilities as specified in Section 02 1725 prior to start of work.

PART 2 PRODUCTS

2.01 MATERIALS

A. Asphaltic Concrete Paving Materials: In accordance with WSDOT 5-04.

B. Tack Coat: In accordance with WSDOT 5-04.

C. Herbicide Treatment: In accordance with WSDOT 5-04.

D. Base Course: Refer to Section 32 1100.

2.02 ASPHALT PAVING MIXES AND MIX DESIGN

A. Provide plant-mixed, hot-laid asphalt-aggregate mixture complying with WSDOT 5-04.

B. Aggregates for Asphalt Concrete: Conform to WSDOT 9-03.8, HMA Class 1/2-inch.

PART 3 EXECUTION

3.01 COORDINATION

A. Review, coordinate and accommodate work of other trades that interface with, affect or are affected by the work of this section so as to facilitate the execution of the overall Work of this project in a coordinated and efficient manner.

3.02 EXAMINATION

A. Verify that compacted subgrade and granular base is dry, compacted to specified density and ready to support paving and imposed loads.

B. Proof-roll sub-base to check for unstable areas or areas requiring additional compaction.

C. Verify gradients and elevations of base are correct.

D. Placement of base course indicates acceptance of the subgrade by installer.

3.03 HERBICIDE TREATMENT

A. Apply herbicide treatment in strict compliance with manufacturer's recommended dosage and application instructions to the subgrade prior to placement of granular base.

B. Apply herbicide to the granular base course after it has been graded and compacted.

3.04 INSTALLATION – BASE COURSE

A. Refer to Section 32 1100.

3.05 PREPARATION – TACK COAT

A. Apply tack coat in accordance with WSDOT 5-04.

3.06 ASPHALT PAVEMENT – PLACEMENT

A. Install Work in accordance with WSDOT Standard Specification using equipment and methods that will spread the asphalt pavement in minimum 10' widths, having a uniform thickness and a smooth flat surface free of imperfections or exposed aggregate that does not allow ponding of water anywhere.

B. Place asphalt within 24 hours of applying tack coat.

C. Compact pavement by rolling to specified density. Do not displace or extrude pavement from position. Hand compact in areas inaccessible to rolling equipment.

D. Perform rolling with consecutive passes to achieve even and smooth finish without roller marks or open, exposed aggregate.

3.07 JOINT SEALING

A. After pavement has been placed for at least 48 hours, apply hot tar to all joints between old and new pavement. Joint should be clean and dry, heat the joint just ahead of the hot tar application with a torch to allow good bond of tar to pavement and proper sealing of joint. Sprinkle clean, dry sand into the tar while it is still hot.

3.08 FIELD QUALITY CONTROL

A. Contractor Quality Control: Employ / assign quality control personnel to monitor the work of this section for conformance to the requirements of the Contract Documents and to good construction practices.

1. Contractor is solely responsible for managing and controlling the quality of the work and conformance with the requirements of the Contract Documents.

2. Contractor shall rely on his own testing, experience and skill in determining what means and methods to employ to achieve specified compacted density and other requirements of this section and not rely solely on test data from Testing Agency.

B. Owner will engage an independent testing and inspection agency to perform field inspections and tests and prepare test reports, in accordance with Section 01 4500 and the testing requirements noted on the Contract Documents and the Contractor will engage a qualified Geotechnical Engineer to perform periodic field quality-control testing and review of Contractor's work.

1. Tests taken are spot checks only at a given location and shall not be interpreted as representing the quality or integrity of all of the work performed.

2. Test data and reviews shall not be construed as acceptance of the work by the testing agency nor shall it relieve the Contractor of his responsibility to replace non-conforming or failed work.

C. Coordinate and schedule the work to accommodate inspections and testing as follows:

1. Geotechnical Engineer shall inspect and approve the following:

a. Subgrade under pavements after it has been cut or filled to required elevation but prior to any required base course being placed.

2. Testing Agency shall inspect and test the following:

a. Subgrade prior to placement of base course or paving.

b. Base and top course compaction density.

c. Asphalt pavement compaction density.

d. Areas required by the Geotechnical Engineer.

D. Testing agency will test compaction of soils in place according to ASTM D1556/D1556M, ASTM D1557, ASTM D2167, ASTM D2922, and ASTM D2937, as applicable. Tests will be performed at the following locations and minimum frequencies:

1. Base and Top Course under Pavement: At each compacted layer, at least one test for every 1,000 sq. ft. or less, but in no case fewer than three tests.

E. When Geotechnical Engineer and / or testing agency reports that subgrade has not achieved degree of compaction density specified, remove and replace soil to depth and width determined by the Geotechnical Engineer; recompact or replace with compacted structural fill and retest, as required to achieve specified compaction density.

END OF SECTION

SECTION 32 1313

PORTLAND CEMENT CONCRETE PAVING

PART 1 GENERAL

1.01 RELATED DOCUMENTS

A. Drawings and general provisions of the Contract, including General Conditions, Supplementary Conditions and Divisions 00 and 01 Specification Sections, apply to work of this section.

1.02 SECTION INCLUDES

A. Concrete Paving.

1.03 REFERENCES

A. ACI 301 - Specifications for Concrete Construction.

B. ACI 304R - Guide for Measuring, Mixing, Transporting, and Placing Concrete.

C. ACI 305R - Guide to Hot Weather Concreting.

D. ACI 306R - Guide to Cold Weather Concreting.

E. ASTM C33/C33M - Standard Specification for Concrete Aggregates.

F. ASTM C143/C143M - Standard Test Method for Slump of Hydraulic-Cement Concrete.

G. ASTM C231/C231M - Standard Test Method for Air Content of Freshly Mixed Concrete by the Pressure Method.

H. ASTM C309 - Standard Specification for Liquid Membrane-Forming Compounds for Curing Concrete.

I. ASTM C1260 - Standard Test Method for Potential Alkali Reactivity of Aggregates (Mortar-Bar Method).

J. ASTM D1556/D1556M - Standard Test Method for Density and Unit Weight of Soil in Place by Sand-Cone Method.

K. ASTM D1557 - Standard Test Methods for Laboratory Compaction Characteristics of Soil Using Modified Effort (56,000 ft-lbf/ft3 (2,700 kN-m/m3)).

L. ASTM D2167 - Standard Test Method for Density and Unit Weight of Soil in Place by the Rubber Balloon Method.

M. ASTM D2937 - Standard Test Method for Density of Soil in Place by the Drive-Cylinder Method.

N. WSDOT 5-05 - Cement Concrete Pavement.

O. WSDOT 5-05.3(8) - Joints.

P. WSDOT 5-05.3(11) - Finishing.

Q. WSDOT 5-05.3(13) - Curing.

R. WSDOT 5-05.3(16) - Protection of Pavement.

S. WSDOT 9-04.1(2) - Premolded Joint Filler for Expansion Joints.

T. WSDOT 9-04.2 - Joint Sealants.

U. WSDOT 9-07.5(2) - Corrosion Resistant Dowel Bars.

V. WSDOT 9-07.6 - Tie Bars.

W. WSDOT 9-07.7 - Welded Wire Reinforcement.

X. WSDOT 9-23 - Concrete Curing Materials, Bonding Agents, and Admixtures.

Y. References shall be the edition current as of the date of the Contract Documents.

1.04 SUBMITTALS

A. Refer to Section 01 3300 for submittal procedures.

B. Product Data: For each type of manufactured material and product indicated.

C. Design Mixes: For each concrete mix, submit proposed mix designs a minimum of 15 days in advance of placing operations for each type of concrete. The submitted mix designs shall include the following:

1. Supporting test data for mixes that is not more than 12 months old. Include a sufficient number of tests and conduct a statistical analysis in compliance with ACI 301.

2. Gradation of fine and coarse aggregates not more than 90 days old showing compliance with ASTM C33/C33M.

3. Proportions of all materials fine and course aggregate and water, including all admixtures added either at the time of batching or at the job site. Aggregate weights shall be based upon saturated surface dry conditions.

4. Water / cement ratio.

5. Slump as measured according to ASTM C143/C143M. Provide slump test for each mix.

6. Air content of freshly mixed concrete as measured according to ASTM C231/C231M.

7. Range of ambient temperature and humidity for which design is valid.

8. Strength measured at 7 and 28 days. Provide strength test for each mix at a frequency of both the 7th and 28th day.

9. Locations or intended use of each mix design.

10. Materials and methods for curing concrete.

11. Source of all materials.

1.05 QUALITY ASSURANCE

A. Perform work in accordance with ACI 301.

B. Obtain concrete materials from same source throughout.

C. Test for alkali-silica reactivity (ASR) using ASTM C1260.

D. Conform to ACI 305R when concreting during hot weather.

E. Conform to ACI 306R when concreting during cold weather.

1.06 PROJECT CONDITIONS

A. Weather Conditions:

1. Do no paving work when raining or when subgrade or base has free water on the surface or does not meet compaction requirements; suspend operations until surfaces are adequately dry.

2. Mixing and placing concrete shall be discontinued when a descending air temperature in the shade away from artificial heat reaches 40 degrees F and shall not be resumed until an ascending air temperature in the shade and away from artificial heat reaches 35 degrees F unless authorized by the Engineer.

B. Subgrade Conditions: Subgrade shall be firm and unyielding, free of ponded water, frozen earth or any organic material.

C. Traffic: Conduct paving operations to ensure minimum interference with roads, streets, walks, and other adjacent occupied or used facilities.

D. Existing Utilities: Locate, mark and protect existing utilities as specified in Section 02 1725 prior to start of work.

PART 2 PRODUCTS

2.01 FORM MATERIALS

A. Steel, wood, or other suitable material of size and strength to resist movement during concrete placement and to retain horizontal and vertical alignment until removal. Use straight forms, free of distortion and defects. Use flexible spring steel forms or laminated boards to form radius bends as required. Forms shall be of depth equal to depth of paving, and so designed as to permit secure fastening together at tops. Coat forms with non-staining type of coating that will not discolor or deface surface of concrete.

2.02 BASE COURSE

A. Base Course: Refer to Section 32 1100.

2.03 CONCRETE MATERIALS

A. Concrete Paving: Portland Cement Concrete in accordance with WSDOT 5-05 .

1. Cement: Type I / II Portland Cement.

2. Calcium is not an allowed admixture.

2.04 CONCRETE MIXING

A. Mix concrete and deliver in accordance WSDOT 5-05.

2.05 REINFORCEMENT

A. Welded Wire Mesh: In accordance with WSDOT 9-07.7.

B. Corrosion Resistant Dowel Bars: In accordance with WSDOT 9-07.5(2).

C. Tie Bars: In accordance with WSDOT 9-07.6.

2.06 JOINTS MATERIALS

A. Joint Materials:

1. Premolded Joint Filler in accordance with WSDOT 9-04.1(2).

2. Joint Sealants in accordance with WSDOT 9-04.2.

2.07 ACCESSORIES

A. Sheet or Compound Curing materials in accordance with WSDOT 9-23.

1. Curing Compound: Clear, membrane forming, conform to ASTM C309, Type I, Class B; curing compound shall not permanently discolor concrete.

PART 3 EXECUTION

3.01 COORDINATION

A. Review, coordinate and accommodate work of other sections that interface with, affect or are affected by the work of this section so as to facilitate the execution of the overall Work of this project in a coordinated and efficient manner.

3.02 EXAMINATION

A. Verify that compacted subgrade and granular base is dry, compacted to specified density and ready to support paving and imposed loads.

B. Proof-roll sub-base to check for unstable areas or areas requiring additional compaction.

C. Verify gradients and elevations of base are correct.

D. Placement of base course indicates acceptance of the subgrade by installer.

3.03 INSTALLATION – BASE COURSE

A. Refer to Section 32 1100.

3.04 PREPARATION

A. Moisten base to minimize absorption of water from fresh concrete.

B. Coat surfaces of manhole frames with oil to prevent bond with concrete pavement.

3.05 FORMING

A. Place and secure forms to correct location, dimension, profile, and gradient.

B. Confirm that top of form and screed elevations will provide positive water drainage off completed concrete work.

C. Assemble formwork to permit easy stripping and dismantling without damaging concrete.

D. Place joint filler vertical in position, in straight lines. Secure to formwork during concrete placement.

3.06 REINFORCEMENT – PLACEMENT

A. Place, support and secure reinforcement against displacement. Do not deviate from required position.

B. Accommodate placement of formed openings.

C. Bend tie wire back behind the line of rebar on weathering surfaces.

D. Conform to applicable code for concrete cover over reinforcement.

3.07 TIE BARS AND CORROSION RESISTANT DOWEL BARS

A. Provide tie bars and corrosion resistant dowel bars as shown on Drawings in conformance with WSDOT 5-05.3(10).

3.08 CONCRETE – PLACEMENT

A. Place concrete in accordance with ACI 304R.

B. Ensure reinforcement, inserts, embedded parts, formed joints are not disturbed during concrete placement.

C. Place concrete continuously over the full width of the panel and between predetermined construction joints. Do not break or interrupt successive pours such that cold joints occur.

3.09 JOINTS

A. Locate construction and contraction / score joints as shown on Drawings or directed by Architect / Engineer. Lay out joints for equal spacing except where specifically dimensioned otherwise on Drawings.

B. Provide joints in accordance with WSDOT 5-05.3(8).

3.10 FINISHING

A. Place curing compound on exposed concrete surfaces immediately after finishing. Apply at application rate required to achieve restriction of water loss not less than required by ASTM C309 in accordance with manufacturer's instructions.

B. Provide finishing in conformance with WSDOT 5-05.3(11).

3.11 TOLERANCES

A. Cement concrete pavement shall not pond water.

3.12 CURING

A. Cement concrete curing shall be in conformance with WSDOT 5-05.3(13).

3.13 JOINT SEALING

A. Cement concrete joint sealing shall be in conformance with WSDOT 5-05.3(8).

3.14 PROTECTION

A. Cement concrete protection shall be in conformance with WSDOT 5-05.3(16).

B. Immediately after placement, protect pavement from premature drying, excessive hot or cold temperatures, and mechanical injury.

C. Do not permit pedestrian traffic over pavement for 7 days minimum after finishing.

D. Do not permit vehicular traffic over pavement until concrete paving has developed minimum strength of 4,000 psi.

3.15 WORKMANSHIP

A. Concrete shall be installed using the best workmanship, including the following:

1. Reinforcing steel set back from face of concrete required distance.

2. Concrete surfaces exposed to view free of waviness or deflection from inadequate form construction.

3. No filling or patching required of concrete surfaces exposed to view.

4. No tie wire or reinforcement within 1-inch of any concrete surface.

5. Corners aligned plumb and straight with consistent appearance.

6. Proper consolidation of concrete, free of rock pockets or voids.

7. No ponding of water.

B. Any part of the concrete paving work installed with improper or poor workmanship shall be removed and replaced at Contractor's expense.

3.16 FIELD QUALITY CONTROL

A. Contractor Quality Control: Employ / assign quality control personnel to monitor the work of this section for conformance to the requirements of the Contract Documents and to good construction practices.

1. Contractor is solely responsible for managing and controlling the quality of the work and conformance with the requirements of the Contract Documents.

2. Contractor shall rely on his own testing, experience and skill in determining what means and methods to employ to achieve specified compacted density and other requirements of this section and not rely solely on test data from Testing Agency.

B. Owner will engage an independent testing and inspection agency to perform field inspections and tests and prepare test reports, in accordance with Section 01 4500 and the testing requirements noted on the Contract Documents and the Contractor will engage a qualified Geotechnical Engineer to perform periodic field quality-control testing and review of Contractor's work.

1. Tests taken are spot checks only at a given location and shall not be interpreted as representing the quality or integrity of all of the work performed.

2. Test data and reviews shall not be construed as acceptance of the work by the testing agency nor shall it relieve the Contractor of his responsibility to replace non-conforming or failed work.

C. Coordinate and schedule the work to accommodate inspections and testing as follows:

1. Geotechnical Engineer shall inspect and approve the following:

a. Subgrade under pavements after it has been cut or filled to required elevation but prior to any required base course being placed.

2. Testing Agency shall inspect and test the following:

a. Subgrade prior to placement of base course or paving.

b. Base and top course compaction density.

c. Concrete strength.

d. Areas required by the Geotechnical Engineer.

D. Testing agency will test compaction of soils in place according to ASTM D1556/D1556M, ASTM D1557, ASTM D2167, ASTM D2922, and ASTM D2937, as applicable. Tests will be performed at the following locations and minimum frequencies:

1. Base and Top Course under Pavement: At each compacted layer, at least one test for every 1,000 sq. ft. or less, but in no case fewer than three tests.

E. When Geotechnical Engineer and / or testing agency reports that subgrade has not achieved degree of compaction density specified, remove and replace soil to depth and width determined by the Geotechnical Engineer; recompact or replace with compacted structural fill and retest, as required to achieve specified compaction density.

END OF SECTION

SECTION 32 1613

CONCRETE SIDEWALKS AND CURBS

PART 1 GENERAL

1.01 RELATED DOCUMENTS

A. Drawings and general provisions of the Contract, including General Conditions, Supplementary Conditions and Divisions 00 and 01 Specification Sections, apply to work of this section.

1.02 SECTION INCLUDES

A. Concrete Sidewalks.

B. Concrete Curbs.

1.03 REFERENCES

A. ACI 301 - Specifications for Concrete Construction.

B. ACI 304R - Guide for Measuring, Mixing, Transporting, and Placing Concrete.

C. ACI 305R - Guide to Hot Weather Concreting.

D. ACI 306R - Guide to Cold Weather Concreting.

E. ASTM A615/A615M - Standard Specification for Deformed and Plain Carbon-Steel Bars for Concrete Reinforcement.

F. ASTM C33/C33M - Standard Specification for Concrete Aggregates.

G. ASTM C143/C143M - Standard Test Method for Slump of Hydraulic-Cement Concrete.

H. ASTM C231/C231M - Standard Test Method for Air Content of Freshly Mixed Concrete by the Pressure Method.

I. ASTM C309 - Standard Specification for Liquid Membrane-Forming Compounds for Curing Concrete.

J. ASTM C1260 - Standard Test Method for Potential Alkali Reactivity of Aggregates (Mortar-Bar Method).

K. ASTM D1556/D1556M - Standard Test Method for Density and Unit Weight of Soil in Place by Sand-Cone Method.

L. ASTM D1557 - Standard Test Methods for Laboratory Compaction Characteristics of Soil Using Modified Effort (56,000 ft-lbf/ft3 (2,700 kN-m/m3)).

M. ASTM D2167 - Standard Test Method for Density and Unit Weight of Soil in Place by the Rubber Balloon Method.

N. ASTM D2937 - Standard Test Method for Density of Soil in Place by the Drive-Cylinder Method.

O. WSDOT 5-05.3(13) - Curing.

P. WSDOT 8-04 - Curbs, Gutters, and Spillways.

Q. WSDOT 8-14 - Cement Concrete Sidewalks.

R. WSDOT 9-04.1(2) - Premolded Joint Filler for Expansion Joints.

S. WSDOT 9-04.2 - Joint Sealants.

T. WSDOT 9-07.7 - Welded Wire Reinforcement.

U. WSDOT 9-23 - Concrete Curing Materials, Bonding Agents, and Admixtures.

1.04 SUBMITTALS

A. Refer to Section 01 3300 for submittal procedures.

B. Product Data: For each type of manufactured material and product indicated.

C. Design Mixes: For each concrete mix, submit proposed mix designs a minimum of 15 days in advance of placing operations for each type of concrete. The submitted mix designs shall include the following:

1. Supporting test data for mixes that is not more than 12 months old. Include a sufficient number of tests and conduct a statistical analysis in compliance with ACI 301.

2. Gradation of fine and coarse aggregates not more than 90 days old showing compliance with ASTM C33/C33M.

3. Proportions of all materials fine and course aggregate and water, including all admixtures added either at the time of batching or at the job site. Aggregate weights shall be based upon saturated surface dry conditions.

4. Water / cement ratio.

5. Slump as measured according to ASTM C143/C143M. Provide slump test for each mix.

6. Air content of freshly mixed concrete as measured according to ASTM C231/C231M.

7. Range of ambient temperature and humidity for which design is valid.

8. Strength measured at 7 and 28 days. Provide strength test for each mix at a frequency of both the 7th and 28th day.

9. Locations or intended use of each mix design.

10. Materials and methods for curing concrete.

11. Source of all materials.

1.05 QUALITY ASSURANCE

A. Perform work in accordance with ACI 301.

B. Obtain concrete materials from same source throughout.

C. Test for alkali-silica reactivity (ASR) using ASTM C1260.

D. Conform to ACI 305R when concreting during hot weather.

E. Conform to ACI 306R when concreting during cold weather.

1.06 REGULATORY REQUIREMENTS

A. Concrete finished as a walking surface shall comply with the following per ICC / ANSI A117.1:

1. Have a slip-resistant finish per Sections 302 and 403.

2. Changes in level shall comply with Sections 403.4 and 303.

3. Openings in floor surfaces shall comply with Section 302.3.

4. ADA Accessibility Tolerances: Comply with ADA tolerances shown on the Drawings.

1.07 MOCK-UP

A. Construct mock-up for review and approval by Architect and Owner Representative(s).

B. Mock-Up Size: 24-inch wide by 3-foot long foot sample panel of sand blasted finished concrete at job site in location agreed upon by all parties under conditions similar to those which will exist during actual placement and finishing.

C. Mock-up will be used to judge workmanship, concrete substrate preparation, operation of equipment, material application, color selection and concrete finishing.

D. Allow ten (10) working days for review of mock-up before proceeding with work.

E. When accepted, mock-up will demonstrate minimum standard of quality required for this work. Approved mock-up may remain as part of finished work, unacceptable mock-ups shall be removed and replaced until an acceptable mock-up is provided.

1.08 PROJECT CONDITIONS

A. Weather Conditions:

1. Do no concrete sidewalk, ramp, stairs, curbs and gutter work when raining or when subgrade or base has free water on the surface or does not meet compaction requirements; suspend operations until surfaces are adequately dry.

2. Mixing and placing concrete shall be discontinued when a descending air temperature in the shade away from artificial heat reaches 40 degrees F and shall not be resumed until an ascending air temperature in the shade and away from artificial heat reaches 35 degrees F unless authorized by the Engineer.

B. Subgrade Conditions: Subgrade shall be firm and unyielding, free of ponded water, frozen earth or any organic material.

C. Existing Utilities: Locate, mark and protect existing utilities as specified in Section 02 1725 prior to start of work.

PART 2 PRODUCTS

2.01 FORM MATERIALS

A. Steel, wood, or other suitable material of size and strength to resist movement during concrete placement and to retain horizontal and vertical alignment until removal. Use straight forms, free of distortion and defects. Use flexible spring steel forms or laminated boards to form radius bends as required. Forms shall be of depth equal to depth of sidewalk, ramp, stairs, curbs or gutter, and so designed as to permit secure fastening together at tops. Coat forms with non-staining type of coating that will not discolor or deface surface of concrete.

2.02 BASE COURSE

A. Base Course: Refer to Section 32 1100.

2.03 CONCRETE MATERIALS

A. Concrete Sidewalks, Ramps, and Stairs: Portland Cement Concrete in accordance with WSDOT 8-14.

B. Concrete Curbs and Gutters: Portland Cement Concrete in accordance with WSDOT 8-04.

2.04 CONCRETE MIXING

A. Concrete Sidewalks, Ramps, and Stairs: Mix concrete and deliver in accordance with WSDOT 8-14.

B. Concrete Curbs and Gutters: Mix concrete and deliver in accordance with WSDOT 8-04.

2.05 REINFORCEMENT

A. Welded Wire Mesh: In accordance with WSDOT 9-07.7.

B. Reinforcing Steel: Steel reinforcing bars conforming to ASTM A615/A615M, Grade 60, or as noted on Drawings.

C. Reinforcement Accessories:

1. Tie Wire: Annealed, minimum 16 gauge.

2. Chairs, Bolsters, Bar Supports, Spacers: Sized and shaped for adequate support of reinforcement during concrete placement.

a. Provide stainless steel or plastic components for placement within 1-1/2-inches of weathering surfaces.

2.06 JOINTS MATERIALS

A. Joint Materials:

1. Premolded Joint Filler in accordance with WSDOT 9-04.1(2).

2. Joint Sealants in accordance with WSDOT 9-04.2.

2.07 ACCESSORIES

A. Sheet and Curing Compound materials in accordance with WSDOT 9-23.

1. Curing Compound: Clear, membrane forming, conform to ASTM C309, Type I, Class B; curing compound shall not permanently discolor concrete.

PART 3 EXECUTION

3.01 COORDINATION

A. Review, coordinate and accommodate work of other sections that interface with, affect or are affected by the work of this section so as to facilitate the execution of the overall Work of this project in a coordinated and efficient manner.

3.02 EXAMINATION

A. Verify compacted subgrade is acceptable and ready to support sidewalks, ramps, stairs and imposed loads.

B. Verify gradients and elevations of base are correct.

C. Placement of base course indicates acceptance of the subgrade by installer.

3.03 INSTALLATION – BASE COURSE

A. Refer to Section 32 1100.

3.04 PREPARATION

A. Moisten base to minimize absorption of water from fresh concrete.

B. Coat surfaces of manhole frames with oil to prevent bond with concrete sidewalks and ramps.

3.05 FORMING

A. Place and secure forms to correct location, dimension, profile, and gradient.

B. Confirm that top of form and screed elevations will provide positive water drainage off completed concrete work.

C. Assemble formwork to permit easy stripping and dismantling without damaging concrete.

D. Place joint filler vertical in position, in straight lines. Secure to formwork during concrete placement.

3.06 REINFORCEMENT – PLACEMENT

A. Place, support and secure reinforcement against displacement. Do not deviate from required position.

B. Accommodate placement of formed openings.

C. Bend tie wire back behind the line of rebar on weathering surfaces.

D. Conform to applicable code for concrete cover over reinforcement.

3.07 CONCRETE – PLACEMENT

A. Place concrete in accordance with ACI 304R.

B. Ensure reinforcement, inserts, embedded parts, formed joints are not disturbed during concrete placement.

C. Place concrete continuously over the full width of the panel and between predetermined construction joints. Do not break or interrupt successive pours such that cold joints occur.

3.08 JOINTS

A. Locate expansion and contraction / score joints as shown on Drawings or directed by Architect / Engineer. Lay out joints for equal spacing except where specifically dimensioned otherwise on Drawings.

B. Align curb, gutter, and sidewalk joints.

C. Place 1/2-inch wide isolation joints where necessary to separate paving from vertical surfaces and other surface features.

D. Provide contraction / score joints:

E. At equal spacing between expansion joints or as shown on Drawings.

3.09 FINISHING

A. Exterior Cement Concrete Sidewalks:

1. Broomed Finish: Medium-light broom finish.

2. Expansion and Contraction Joints: Tool edges and conform to detail on Drawings.

B. Sand Blast Finish:

1. Design Intent: Provide a medium sand blast finish that starts to expose the larger aggregates within the concrete, but still provides an ADA-compliant walking surface. Provide mock-up for approval prior to installation for the Project. Contractor shall select the means and methods for obtaining the sand blast finish appearance.

C. Place curing compound on exposed concrete surfaces immediately after finishing. Apply at application rate required to achieve restriction of water loss not less than required by ASTM C309 in accordance with manufacturer's instructions.

3.10 TOLERANCES

A. Sidewalks cross slope shall not exceed 2.0 percent and shall not pond water.

B. Accessibility Tolerances:

1. Conform to requirements of ICC / ANSI A117.1 as applicable to sidewalks and public walkways.

2. Conform to requirements of ADA as applicable to sidewalks and public walkways.

3.11 CURING

A. Cement concrete curing shall be in conformance with WSDOT 5-05.3(13).

3.12 PROTECTION

A. Immediately after placement, protect pavement from premature drying, excessive hot or cold temperatures, and mechanical injury.

B. Do not permit pedestrian traffic over pavement for 7 days minimum after finishing.

3.13 WORKMANSHIP

A. Concrete shall be installed using the best workmanship, including the following:

1. Reinforcing steel set back from face of concrete required distance.

2. Concrete surfaces exposed to view free of waviness or deflection from inadequate form construction.

3. No filling or patching required of concrete surfaces exposed to view.

4. No tie wire or reinforcement within 1-inch of any concrete surface.

5. Corners aligned plumb and straight with consistent appearance.

6. Proper consolidation of concrete, free of rock pockets or voids.

7. No ponding of water.

B. Any part of the concrete paving work installed with improper or poor workmanship shall be removed and replaced at Contractor's expense.

3.14 FIELD QUALITY CONTROL

A. Contractor Quality Control: Employ / assign quality control personnel to monitor the work of this section for conformance to the requirements of the Contract Documents and to good construction practices.

1. Contractor is solely responsible for managing and controlling the quality of the work and conformance with the requirements of the Contract Documents.

2. Contractor shall rely on his own testing, experience and skill in determining what means and methods to employ to achieve specified compacted density and other requirements of this section and not rely solely on test data from Testing Agency.

3. ADA Tolerances Compliance: Execute and monitor the work of this section for compliance with ADA tolerances shown on the Drawings where applicable. Inspect and certify compliance with the ADA tolerances as specified in Section 01 4500.

B. Owner will engage an independent testing and inspection agency to perform field inspections and tests and prepare test reports, in accordance with Section 01 4500 and the testing requirements noted on the Contract Documents and the Contractor will engage a qualified Geotechnical Engineer to perform periodic field quality-control testing and review of Contractor's work.

1. Tests taken are spot checks only at a given location and shall not be interpreted as representing the quality or integrity of all of the work performed.

2. Test data and reviews shall not be construed as acceptance of the work by the testing agency nor shall it relieve the Contractor of his responsibility to replace non-conforming or failed work.

C. Coordinate and schedule the work to accommodate inspections and testing as follows:

1. Geotechnical Engineer shall inspect and approve the following:

a. Subgrade under concrete sidewalks, ramps, stairs, curbs or gutters after it has been cut or filled to required elevation but prior to any required base course being placed.

2. Testing Agency shall inspect and test the following:

a. Subgrade prior to placement of base course or concrete sidewalks, ramps, stairs, curbs or gutters.

b. Base and top course compaction density.

c. Concrete strength.

d. Areas required by the Geotechnical Engineer.

D. Testing agency will test compaction of soils in place according to ASTM D1556/D1556M, ASTM D1557, ASTM D2167, ASTM D2922, and ASTM D2937, as applicable. Tests will be performed at the following locations and minimum frequencies:

1. Base and Top Course under Concrete Sidewalks, Ramps, Stairs, Curbs or Gutters: At each compacted layer, at least one test for every 1,000 sq. ft. or less, but in no case fewer than three tests.

E. When Geotechnical Engineer and / or testing agency reports that subgrade has not achieved degree of compaction density specified, remove and replace soil to depth and width determined by the Geotechnical Engineer; recompact or replace with compacted structural fill and retest, as required to achieve specified compaction density.

END OF SECTION

SECTION 32 1713

WHEELSTOPS

PART 1 GENERAL

1.01 RELATED DOCUMENTS

A. Drawings and general provisions of the Contract, including General Conditions, Supplementary Conditions and Divisions 00 and 01 Specification Sections, apply to work of this section.

1.02 SECTION INCLUDES

A. Precast Concrete Wheelstops.

1.03 REFERENCES

A. References shall be the edition current as of the date of the Contract Documents.

B. ASTM A615/A615M - Standard Specification for Deformed and Plain Carbon-Steel Bars for Concrete Reinforcement.

C. ASTM C33/C33M - Standard Specification for Concrete Aggregates.

D. ASTM C150/C150M - Standard Specification for Portland Cement.

E. ASTM C260/C260M - Standard Specification for Air-Entraining Admixtures for Concrete.

PART 2 PRODUCTS

2.01 MATERIALS

A. Wheelstop Parking Bumpers: Precast concrete, conforming to the following:

1. Nominal Size: 4.5 - 6 inches high, 8 - 10 inches wide, 6 feet long.

2. Cement: ASTM C150/C150M, Portland Type I - Normal; gray color.

3. Concrete Materials: ASTM C33/C33M; water and sand.

4. Reinforcing Steel: ASTM A615/A615M, deformed steel bars; unfinished, strength and size commensurate with precast unit design.

5. Air Entrainment Admixture: ASTM C260/C260M ASTM C260.

6. Concrete Mix: Minimum 4000 psi, 28 day strength, air entrained to 5 to 7 percent.

7. Use rigid molds, constructed to maintain precast units uniform in shape, size and finish. Maintain consistent quality during manufacture.

8. Embed reinforcing steel in concrete.

9. Cure units to develop concrete quality, and to minimize appearance blemishes such as non-uniformity, staining, or surface cracking.

10. Minor patching in plant is acceptable, providing appearance of units is not impaired.

B. Attachment:

1. Asphalt Pavement - Dowels: #6 reinforcing steel bar; 30 inches long.

2. Concrete Pavement - Adhesive: Epoxy adhesive suitable for permanent attachment to concrete.

PART 3 EXECUTION

3.01 COORDINATION

A. Review, coordinate and accommodate work of other trades that interface with, affect or are affected by the work of this section so as to facilitate the execution of the overall Work of this project in a coordinated and efficient manner.

3.02 INSTALLATION

A. Install units in locations noted on the Drawings without damage to shape or finish. Replace or repair damaged units.

B. Install units in straight or square alignment with adjacent work.

C. Secure curbs in the proper location as follows:

1. Asphalt Pavement: Drive reinforcing steel dowel through holes cast in curb into pavement and subgrade below; top of dowel shall be driven flush with top of curb.

2. Concrete Pavement: Adhere unit to concrete subsurface securely with epoxy adhesive.

3.03 FIELD QUALITY CONTROL

A. Contractor Quality Control: Employ / assign quality control personnel to monitor the work of this section for conformance to the requirements of the Contract Documents and to good construction practices.

1. Contractor is solely responsible for managing and controlling the quality of the work and conformance with the requirements of the Contract Documents.

END OF SECTION

SECTION 32 1723

PAVEMENT MARKINGS

PART 1 GENERAL

1.01 RELATED DOCUMENTS

A. Drawings and general provisions of the Contract, including General Conditions, Supplementary Conditions and Divisions 00 and 01 Specification Sections, apply to work of this section.

1.02 SECTION INCLUDES

A. Pavement and Curb Marking Paint including:

1. Lines.
2. Letters.
3. Graphics.
4. Symbols.

1.03 REFERENCES

A. References shall be the edition current as of the date of the Contract Documents.

1.04 SUBMITTALS

A. Refer to Section 01 3300 for submittal procedures.

B. Product Data: Provide product data on each different paint and marking product.

1.05 QUALITY ASSURANCE

A. Installer Qualifications: Company specializing in performing the work of this section with a minimum three years of experience.

1.06 PROJECT CONDITIONS

A. Apply painted pavement markings only to dry surfaces when air temperature is 50 degrees or above.

PART 2 PRODUCTS

2.01 PAVEMENT AND CURB MARKING PAINT

A. Pavement and Curb Marking Paint: Quick-drying acrylic latex traffic marking paint conforming to WSDOT 8-22.

B. Templates: Provide stencil templates for painting directional arrows, handicap symbols, letters, etc.; match configuration shown on Drawings or as directed by Architect / Engineer.

C. Color(s):

1. Parking / Traffic Lines and Lettering: White.

2. Drop Off / No Parking Zone Lines: White.

3. Traffic Symbols: White.

4. Handicap Parking Symbol: White and ADA Blue.

5. Fire Lane Curbs: Red.

2.02 THERMOPLASTIC PAVEMENT MARKINGS

A. Thermoplastic Pavement Markings: Thermoplastic pavement marking paint conforming to WSDOT 9-34.3.

1. Color(s): White.

2.03 ANTI-SLIP TRAFFIC PAINT

PART 3 EXECUTION

3.01 COORDINATION

A. Review, coordinate and accommodate work of other trades that interface with, affect or are affected by the work of this section so as to facilitate the execution of the overall Work of this project in a coordinated and efficient manner.

B. Do not start the work of this section until landscaping work is complete and heavy construction traffic on site is over.

3.02 EXAMINATION

A. Verify that pavement is clean, dry and ready to receive paint markings according to manufacturer's written instructions.

B. Proceed with pavement marking only after unsatisfactory conditions have been corrected.

3.03 PREPARATION

A. Parking Lot Striping:

1. Layout the parking lines accurately as shown on the Drawings. Advise Architect / Engineer of any discrepancies in the layout prior to proceeding.

2. Provide barricades and signage to prevent traffic from crossing wet paint.

3. Beginning of installation indicates acceptance of conditions and confirmation that line layout and pavement dimensions shown on the Drawings can be achieved with the pavement and layout constructed.

3.04 INSTALLATION – PARKING LOT STRIPING

A. Install 2 coats of marking paint using spray equipment designed for pavement marking in accordance with manufacturer's instructions and WSDOT 8-22.

B. Apply lines and markings to accurately reflect the line layout shown on Drawings.

C. Parking and traffic lines shall be a consistent 4-inches in width, straight, and have clean edges; other lines shall be width shown on the Drawings or as directed Architect / Engineer.

D. Parking lines shall be parallel and of equal length.

E. Use templates for painting arrows, letters, graphics and stop bars.

1. Apply graphic symbols and lettering with paint-resistant, die-cut stencils, firmly secured to pavement. Mask an extended area beyond edges of each stencil to prevent paint application beyond the stencil. Apply paint so that it cannot run beneath the stencil.

2. Broadcast glass beads uniformly into wet markings at a rate of 6 lb. / gal.

3.05 TOLERANCES

A. Maximum Variation from True Position: 1-inch.

3.06 FIELD QUALITY CONTROL

A. Contractor Quality Control: Employ / assign quality control personnel to monitor the work of this section for conformance to the requirements of the Contract Documents and to good construction practices.

1. Contractor is solely responsible for managing and controlling the quality of the work and conformance with the requirements of the Contract Documents.

END OF SECTION

SECTION 32 3300

SITE FURNISHINGS

PART 1 GENERAL

1.01 RELATED DOCUMENTS

A. Drawings and general provisions of the Contract, including General Conditions, Supplementary Conditions and Divisions 00 and 01 Specification Sections, apply to work of this section.

1.02 SECTION INCLUDES

A. Trash / Recycling Receptacles.

B. Decorative Tree Grates.

C. Site Seating.

D. Skate Deterrents.

1.03 REFERENCES

A. References shall be the edition current as of the date of the Contract Documents.

B. ADA Standards - 2010 ADA Standards for Accessible Design.

1.04 SUBMITTALS

A. Refer to Section 01 3300 for submittal procedures.

B. Product Data: Submit manufacturer's product literature describing each product, features and options. Include manufacturer's installation instructions.

C. Samples: Submit color samples from manufacturer's standard color selections for selection or color confirmation by Architect.

1.05 DELIVERY, STORAGE AND HANDLING

A. Deliver and store in conformance with manufacturer's recommendations.

PART 2 PRODUCTS

2.01 TRASH / RECYCLING RECEPTACLE

A. Manufacturer / Product: Landscape Forms, *Plainwell* is the basis of design and the standard of quality, function, performance and appearance required for this project.

1. Landscape Forms; *Plainwell* (specified, basis of design).

2. Products by other manufacturers may be acceptable, subject to their ability to meet or exceed this standard and provide products conforming with the requirements of the Drawings and this Specification.

3. Substitutions: Refer to Section 01 6000 for substitution procedures and requirements. Proposed substitutions must match specified product performance and colors.

B. Trash / Recycling Receptacles:

1. Trash / Recycling unit with signage.

2. Sign Messages, Refer to Drawings for locations:

a. TRASH.

b. RECYCLING.

3. Mounting: Surface mounted.

4. Finish: Powder coated.

5. Colors: Blue Bell for Recycling, Black for Trash.

2.02 DECORATIVE GRATES

A. Manufacturer / Product: Urban Accessories, *Chinook* is the basis of design and the standard of quality, function, performance and appearance required for this project.

1. Urban Accessories; *Chinook* (specified, basis of design).

2. Products by other manufacturers may be acceptable, subject to their ability to meet or exceed this standard and provide products conforming with the requirements of the Drawings and this Specification.

3. Substitutions: Refer to Section 01 6000 for substitution procedures and requirements. Proposed substitutions must match specified product performance and colors.

B. Decorative Grate 1:

1. Recycled cast grey iron tree grate.

2. Size: 4 foot by 6 foot rectangle.

3. Sections: 4 sections.

4. Grate Opening Size: 1/2-inch maximum square openings for ADA Standards compliance.

5. Tree Opening: 16 inches.

6. Frame: 4'-5/8"(+/-) x 6-5/8"(+/-) .

7. No light wells.

8. Apply Rhomar Industries *Black Max* rust conversion product or approved equal to pre-darken grates.

2.03 SITE SEATING

A. Manufacturer / Product: QCP, *Pebble* is the basis of design and the standard of quality, function, performance and appearance required for this project.

1. QCP; *Pebble* (specified, basis of design).

2. Products by other manufacturers may be acceptable, subject to their ability to meet or exceed this standard and provide products conforming with the requirements of the Drawings and this Specification.

3. Substitutions: Refer to Section 01 6000 for substitution procedures and requirements. Proposed substitutions must match specified product performance and colors.

B. Material: Standard Reinforced Concrete (SCR).

C. Finish: Craftsman's Etch.

D. Site Seating:

1. Site Seating Type A:

a. Size: 24-inches x 18-inches x 12-inches.

b. Color: Black.

2. Site Seating Type B:

a. Size:42-inches x 28-inches x 15-inches.

b. Color: White.

3. Site Seating Type C:

a. Size: 77-inches x 54-inches x 30-inches.

b. Color: Natural.

4. Site Seating Type D:

a. Size: 56-inches x 37-inches x 20-inches.

b. Color: Natural.

E. Adhesive:

1. Manufacturer / Product: Sika, *Sikaflex* is the basis of design and the standard of quality, function, performance and appearance required for this project.

a. Sika; *Sikaflex* (specified, basis of design).

b. Products by other manufacturers may be acceptable, subject to their ability to meet or exceed this standard and provide products conforming with the requirements of the Drawings and this Specification.

c. Substitutions: Refer to Section 01 6000 for substitution procedures and requirements. Proposed substitutions must match specified product performance and colors.

2.04 SKATE DETERRENTS

A. Manufacturer / Product: Skatestoppers, *Childress* is the basis of design and the standard of quality, function, performance and appearance required for this project.

1. Skatestoppers; *Childress* (specified, basis of design).

2. Products by other manufacturers may be acceptable, subject to their ability to meet or exceed this standard and provide products conforming with the requirements of the Drawings and this Specification.

3. Substitutions: Refer to Section 01 6000 for substitution procedures and requirements. Proposed substitutions must match specified product performance and colors.

B. Skate Deterrents:

1. Style: Fixed angle skate deterrent.

2. Mounting: Surface mounted using adhesive and smart pins plus system. Refer to manufacturer's recommended installation instructions.

3. Finish: bronze.

PART 3 EXECUTION

3.01 COORDINATION

A. Review, coordinate and accommodate work of other sections that interface with, affect or are affected by the work of this section so as to facilitate the execution of the overall Work of this project in a coordinated and efficient manner.

3.02 EXAMINATION – GENERAL

A. Examine the areas and conditions where site furnishings are to be installed and notify the Contractor of conditions detrimental to the proper and timely installation and completion of the work.

B. Do not proceed with the work until unsatisfactory conditions have been corrected by the Contractor in a manner acceptable and to the satisfaction of the Architect and Owner.

3.03 INSTALLATION – GENERAL

A. Refer to applicable details and plans for layout and installation.

B. Install rigid, plumb and true to lines and levels shown. Stake out all elements called for in this section for approval by Architect or authorized representative. All work shall be of the highest quality.

C. Unless otherwise indicated, install all equipment specified by name / manufacturer as per manufacturer's recommendations.

3.04 INSTALLATION – TRASH / RECYCLING RECEPTACLES

A. Install trash / recycling receptacles level, plumb and in proper alignment, bolt securely to concrete walk with stainless steel anchor bolts, in accordance with manufacturer’s installation instructions.

3.05 INSTALLATION – DECORATIVE GRATES

A. Install decorative grates, level and in proper alignment in accordance with manufacturer’s installation instructions.

3.06 INSTALLATION - SITE SEATING

A. Install in accordance with the manufacturer's installation instructions.

3.07 INSTALLATION – SKATE DETERRENTS

A. Install at locations shown on the Drawings per the manufacturer’s installation instructions.

3.08 FIELD QUALITY CONTROL

A. Contractor Quality Control: Employ / assign quality control personnel to monitor the work of this section for conformance to the requirements of the Contract Documents and to good construction practices.

1. Contractor is solely responsible for managing and controlling the quality of the work and conformance with the requirements of the Contract Documents.

END OF SECTION

SECTION 32 8000

IRRIGATION

PART 1 GENERAL

1.01 RELATED DOCUMENTS

A. Drawings and general provisions of the Contract, including General Conditions, Supplementary Conditions and Divisions 00 and 01 Specification Sections, apply to work of this section.

1.02 SECTION INCLUDES

A. Irrigation System.

1.03 SCOPE OF WORK

A. Furnishing and installing a complete automatic irrigation system including complete point of connection to water line, trenching and backfill, and furnishing and installing all labor equipment and items noted on Drawings and specified herein, and balancing and testing of system.

1.04 REFERENCES

A. References shall be the edition current as of the date of the Contract Documents.

B. ASTM A53/A53M - Standard Specification for Pipe, Steel, Black and Hot-Dipped, Zinc-Coated, Welded and Seamless.

C. ASTM B3 - Standard Specification for Soft or Annealed Copper Wire.

D. ASTM D1784 - Standard Classification System and Basis for Specification for Rigid Poly(Vinyl Chloride) (PVC) Compounds and Chlorinated Poly(Vinyl Chloride) (CPVC) Compounds.

E. ASTM D1785 - Standard Specification for Poly(Vinyl Chloride) (PVC) Plastic Pipe, Schedules 40, 80, and 120.

F. ASTM D2241 - Standard Specification for Poly(Vinyl Chloride) (PVC) Pressure-Rated Pipe (SDR Series).

G. ASTM D2466 - Standard Specification for Poly(Vinyl Chloride) (PVC) Plastic Pipe Fittings, Schedule 40.

H. ASTM D2672 - Standard Specification for Joints for IPS PVC Pipe Using Solvent Cement.

I. IAPMO (UPC) - Uniform Plumbing Code.

J. UL (DIR) - Online Certifications Directory.

1.05 SUBMITTALS

A. Refer to Section 01 3300 for submittal procedures.

B. Products and Materials: Immediately after award of contract, provide sufficient descriptive literature / information as to all operating characteristics, including operating pressures, pressure losses, materials used in product, test certificates, special features, etc., for those products not specified by manufacturer or those submitted for approval as equal. Only the Landscape Architect can accept an item as "equal". Approval must be in writing.

1.06 QUALITY ASSURANCE

A. Codes and Ordinances: All local, municipal and State laws, rules, and regulation governing or relating to any portion of this work are hereby incorporated into and made a part of these specifications. Anything contained in these specifications shall not be construed to conflict with the above-mentioned rules, regulations or requirements, and where a conflict may occur, the rules regulations, or requirements of the governing code shall be adhered to. However, when these specifications and / or drawings call for or describe materials, workmanship or construction of a better quality, higher standard or larger size, these specifications and / or Drawings shall take precedence over the requirements of said rules, regulations, or codes.

1.07 PERMITS AND FEES

A. Obtain all permits and pay required fees to any governmental agency having jurisdiction over the work. Arrange inspections if required by local agencies and ordinances during the course of construction.

1.08 APPROVALS AND CLOSEOUT PROCEDURES

A. Whenever the terms "approve" "approval" or "approved" are used in the Specification, they mean approval of Landscape Architect in writing.

B. As-Built Irrigation Drawings: Contractor shall submit as-built drawings of the complete irrigation system in accordance with Section 01 7700 and Section 01 7839.

1. Show actual location of hidden items including valves, stub cuts, manual drains shut-off valves shall be shown on the as-built drawings by dimensions from easily identified permanent features such as buildings, curbs, fences, walks, or property lines.

2. As-built drawings shall show approved manufacturer's name and catalog number.

3. The as-built drawings shall be to scale and all indications shall be neat.

C. Operations Manual: Refer to Section 01 7700 and Section 01 7823 for submittal requirements. The submittal shall include, as a minimum, the following information for all items used on the system:

1. List of authorized distributors and service representatives for each piece of irrigation equipment, including names, addresses, and phone numbers.

2. Guarantee / warranty certificates.

3. Instruction manuals.

4. Parts lists for each item with exploded views of each item showing part numbers.

5. Complete trouble-shooting guide to common irrigation problems.

6. DCVA Test Certification. Contractor shall arrange and pay for test by a Washington State certified backflow assembly tester.

7. Winterization and spring start-up procedures.

D. At the time of final inspection of the completed installation, the Contractor shall have completed revisions to the Architect's satisfaction of the as-built drawings and operations manual (indicating all changes) ready to turn over to the Owner for recording purposes; this shall be accomplished prior to final payment.

1.09 JOB CONDITIONS

A. Water Source: Refer to Drawings, connect to stub out as shown on Civil Drawings.

B. Power Source: 120 V.A.C. power for controller, as provided in Electrical Drawings. Provide one 3-inch diameter sleeve for control wiring from controller location to outside planting area under paving as shown.

C. Sleeving: Sleeve under all paved areas, with PVC class 80 sleeves, size as shown on Drawings.

D. Other Trades: Coordinate all work with that of other trades.

E. Available Water Pressure: Verify available water pressure at point of connection prior to beginning work.

1.10 PROTECTION

A. Protect work, adjacent property, public, and be responsible for any damage or injury arising from this contract.

B. Confine work to areas designated. Do not disturb natural vegetation outside of project limit lines. Protect trees and shrubs within project limits not designated to be removed. Repair or replace vegetation damaged as a result of Contractor's operation to satisfaction of Owners at Contractor's expense.

C. Be cognizant of utility lines and underground obstructions. Be familiar with utility, irrigation, mechanical, and electrical plans, so that digging / drilling operations do not damage lines. Replace or repair at Contractor's expense any existing buildings, equipment, underground utilities, walks, stairs, and / or forms damaged as a result of Contractor's operations in a manner satisfactory to the Owner before final payment is made.

1.11 GUARANTEE

A. Guarantee the satisfactory operation of equipment, materials and workmanship, including restoration of the area for a period of two (2) years from the date of final acceptance. Repair or replace any defect in equipment or workmanship occurring within that year at Contractor's expense.

PART 2 PRODUCTS

2.01 GENERAL

A. Materials: All materials to be incorporated in this system shall be new and without flaws or defects and of quality and performance as specified, and meeting the requirements of the system. All pipe damaged or rejected because of defects shall be removed from the site at the time of rejections.

B. Substitutions: No substitutions of smaller pipe sizes will be permitted but substitutions of larger sizes of same type at no extra cost with approval are acceptable.

C. Whenever any material is specified by name or number, such specifications shall be used for the purpose of facilitating a description of the materials and establishing quality and shall be deemed and construed to be followed by the words "or approved equal." No substitutions will be permitted which have not been submitted for prior written approval of the Landscape Architect.

2.02 PIPE AND FITTINGS

A. Pipe and Fittings:

1. PVC Pipe and Fittings: PVC compound Type 1, Grade 1, or Type 1, Grade 2, conforming to ASTM D1784 specifications and approved and certified by the National Sanitation Foundation, all fittings Schedule 40 unless otherwise noted. Each length of PVC pipe is to be marked with an identifying extrusion "run" number and the manufacturer's name or trade name, the pipe size and schedule or class.

2. PVC Solvent Weld Pipe: PVC 1120 and 1220 material, and shall have 200 psi minimum pressure rating unless otherwise indicated, with SDR 21 walls which conform to ASTM D2241. PVC pipe with walls heavier than SDR 21 shall be installed when noted.

3. PVC Threaded Pipe: PVC 1120 or PVC 1220 materials, Schedule 80 conforming to ASTM D1785.

4. Plastic Pipe Fittings: Conform to ASTM D2466, Type 1, Grade 1 or 2. Pipe may be belled on one end with the dimensions of the tapered bell conforming to ASTM D2672. Molded fittings manufactured of the same materials as the pipe, suitable for solvent weld, unless otherwise specified. Slip fitting socket taper shall be so sized that a dry, unsoftened pipe end can be inserted no more than halfway into the socket. Plastic saddle and flange fittings not permitted.

5. Solvent Weld Compound: Two-step application, with primer and solvent compounds.

6. Copper Pipe: Type M rigid copper pipe and fittings, in accordance with IAPMO (UPC) and local Code, refer to Mechanical Specifications.

7. Hangers for Piping in Structure: Refer to Mechanical Specification.

8. Galvanized Pipe: Standard wall Schedule 40, hot-dipped galvanized iron or steel pipe, threaded or coupled, which conforms to ASTM A53/A53M.

2.03 IRRIGATION HEADS

A. As shown on Drawings.

2.04 VALVES

A. Quick Coupler Valves: Brass, one-or two-piece with spring-loaded locking rubber cover. As shown on Drawings.

B. Manual Drain Valves: Brass, 3/4-inch size, commercial quality, non-rising stem type, as shown on Drawings.

C. Zone Valves: Electric remote-control valve as shown on Drawings. Mark each valve with a permanent tag denoting the appropriate zone number.

D. Master Valve: Normally closed electric remote control valve as shown on Drawings.

2.05 VALVE BOXES AND PROTECTIVE SLEEVES

2.06 PROTECTIVE SLEEVE WITH LOCKING CAPS

2.07 VALVE KEYS AND VALVE BOX COVER KEYS

2.08 CONTROLLER

A. Mount at 60-inches off floor in location shown on Drawings and as verified with Architect. Provide locking cover and two (2) sets of keys.

2.09 MISCELLANEOUS ELECTRICAL EQUIPMENT

A. Control Wire: Insulated single-strand copper, minimum AWG No. 14, 600 V UL (DIR)-approved as Type UF. Copper conductor to meet or exceed ASTM B3. Red, white, orange, and black colors must be available. Sufficient quantities must be supplied to meet splice and extra-wire requirements listed under control wire installation. Control wire size must meet or exceed Rainbird irrigation control wire specifications including length of run/size ratio.

B. Splice: Make watertight electrical wire splices with 3M DBY- 6 / DBR – 6 direct burial splice kits, 600 V and UL listed.

C. Electrical Tape: Black plastic, 3/4-inch wide, minimum of 0.007-inch thick, and all-weather type.

D. Duct Tape: All-weather cloth tape.

E. Trace Wire: Bare #10 solid copper.

2.10 DRAIN ROCK

A. Unfractured rock; 100 percent passing 1-1/2-inch square sieve and 0 percent passing 3/4-inch square sieve.

2.11 BEDDING / BACKFILL MATERIAL

A. Import sand, maximum particle size 1/4-inch. Submit source and sample for approval.

PART 3 EXECUTION

3.01 COORDINATION

A. Review, coordinate and accommodate work of other sections that interface with, affect or are affected by the work of this section so as to facilitate the execution of the overall Work of this project in a coordinated and efficient manner.

3.02 INSPECTION

A. Discrepancies: Upon initiation of work or at earliest time discovered, report to the Architect any deviations between the irrigation drawings and the site. Failure to do so prior to the installing of equipment, and resulting in replacing, and / or relocating, or additional equipment, shall be done at Contractor's expense.

B. Installation of piping prior to establishment of correct subgrade elevations is strongly discouraged. Contractor must attain specified bury depths.

C. Available Pressure Verification: Prior to the start of any work, verify the assumed static pressure at point of connection. Notify Architect in writing of pressure available for approval to proceed.

D. Plant Materials: Locate irrigation lines to avoid proposed plant material locations and any existing trees. Minor field adjustments may be made by the Landscape Architect to shrubs to avoid equipment. If conflict occurs with tree pit, relocate irrigation line at no additional cost.

3.03 PERFORMANCE

A. Stake the sprinkler irrigation system head locations following the schematic design shown on the plans for approval before the construction begins. Alterations and changes in the layout may be expected in order to conform to the ground conditions and to obtain full and adequate coverage of water. It is understood that corrective measures may become necessary but no changes or alteration in the system as planned shall be made without the prior authorization of the Landscape Architect.

B. Where connections to existing stub-outs are required make necessary adjustments in layout to connect should stubs not be located exactly as shown. Adjust layout as necessary to install around existing work. Where piping is shown to be under paved areas, but running parallel and adjacent to planted area, intention is to install piping in planted areas. Do not install directly over another line in same trench.

C. Water service connections shall conform to the requirements set forth by the supplying agency, and all codes and ordinance.

3.04 TRENCHING

A. Trenches shall be excavated for all pipes to provide a minimum depth of cover below finish grade as follows:

1. Mainlines: 18-inches.

2. Laterals: 12-inches.

B. Excavate no wider at any point than is necessary to lay the pipe or installation equipment. Excavate with vertical sides and provide bracing and shoring as required.

C. Excavate to depth required in any material encountered with no extra compensation. Provide import sand bedding to at least 4-inches below specified pipe depth and backfill with sand to subgrade elevation.

D. Exercise care when excavating trenches near existing trees. Where roots are 2-inches and greater in diameter, except in the direct path of the pipe, hand-excavate and tunnel. When large roots are exposed, wrap with heavy burlap for protection and to prevent excessive drying. Trenches dug by machines shall have the sides hand-trimmed, making a clean cut of the roots. All roots 1/2-inches and greater in diameter that are cut and trimmed shall be treated with an approved tree wound dressing. Trenches having exposed tree roots shall be backfilled within 24 hours unless adequately protected by moist burlap or canvas.

E. Topsoil shall be kept separate from subsoil and shall be replaced as the top layer when backfill is made.

3.05 PIPING

A. Drain Valves: Installed at Point of Connection only. Install a drain rock slump at each valve. Install valves as per detail. Locate sumps outside of paved areas, use off-sets if necessary. System will be winterized by compressed-air blowout throughout quick coupler.

B. Pipe Placement: Plastic pipe shall be installed in a manner so as to provide for expansion and contraction as recommended by the manufacturer. Provide trace wire attached to pipe 5 feet on center / mainlines only. Allow 4-inch clearance between pipes in a common trench. Do not stack pipes vertically in a common trench.

3.06 JOINTING

A. General: All threaded joints (PVC or galv.) shall be sealed with Teflon tape or Rectorseal "Heavy Duty" #100 virgin Teflon thread sealing paste only (no substitutes).

B. Care shall be taken to not over-tighten fittings.

C. Keep interior of pipes clean and free from dirt, debris, excess solvent, pipe cuttings or burrs, and ream to full diameter. When pipe laying is not in progress, close ends of pipe.

D. PVC Pipe: Use two-step solvent weld processes only, apply as per manufacturer's recommendations.

E. No water shall be permitted in pipe until a period of at least 10 hours has elapsed for solvent weld-setting and curbing.

F. The joints shall be allowed to cure at least 24 hours before pressure is applied to the system.

G. Only factory-threaded schedule 80 PVC pipe may be connected to a threaded fitting without an adapter.

H. No male PVC adapters permitted. Use only female PVC adapters with galvanized steel pipe nipples (3-inch minimum length). Street ells permitted only for triple swing joints, and only "Marlex" Schedule 40 high-density polyethylene (no substitutes).

3.07 INSTALLATION

A. General: See details for general installation requirements. Provide sufficient clearance for materials requiring maintenance. Install all materials as per manufacturer's recommendations.

B. Sprinkler Head / Quick Coupler: Risers for all sprinkler heads and quick-coupler valves shall be standard triple-swing joining type as detailed; made with Schedule 80 PVC threaded fittings.

C. Minimum riser size shall be the pipe size of the sprinkler head or quick coupler.

D. All sprinkler heads and quick coupling valves shall be set perpendicular and flush to finished grades. Heads in lawn areas must be depressed 1/2-inches to avoid mower damage.

E. Spray pattern shall not overthrow onto structures, glass, parking lots, walkways, or public right-of-ways.

F. Locate heads to avoid possible damage by cars.

G. Heads must be located 6-inches away from edge of paving, curbs and buildings.

H. After fine grading / mulching adjust all head heights as necessary.

I. Valves: Enclose all valves in valve boxes except manual or drain valves which are to be enclosed in protective sleeves with locking caps. Valve box extension may be required. Install as per detail and locate precisely by dimensions to two fixed objects on as-built drawings.

J. Valve bonnet packings and bolts shall be checked and tightened before backfill.

K. Control Wiring Installation: Wiring between automatic controller and automatic control valves shall conform to National Electrical Code, latest edition, and shall have a common neutral, white; and separate control conductor for each valve.

L. Splices will be permitted only at junction boxes, valve boxes, or at control equipment. A minimum of 2 feet or excess conductor shall be left at all splices, terminal, and control valves to facilitate inspection and future splicing. Encapsulate all splices with approved sealants. Run a bare copper trace wire from the controller along all mainlines to the furthest zones. Tape wire to top of main at 5 feet maximum intervals. Provide 4 spare wires looped through entire system – labeled at each J-box and valve box.

M. Clean-Up: Keep the premises free from rubbish and debris at all times, and arrange material so as not to interfere with other operations on the job site. Remove all unused material, rubbish, and debris from the site.

3.08 INSPECTIONS AND TESTING

A. General: To be valid, the pressure tests must be performance under the direction of the Landscape Architect. The Contractor must give 48 hours notice to the Landscape Architect when inspection is required. The location, inspection and testing provisions for these specifications will be strictly adhered to.

B. If, for any reason, any part of the sprinkler system is backfilled before location, testing, or inspection, it must be completely uncovered and exposed until approved for backfilling by Landscape Architect.

C. The Landscape Architect reserves the right to direct the removal and replacement of any items which, in his opinion, do not present an orderly, reasonably neat, or workmanlike appearance, provided such items can be properly installed in such orderly way by the usual methods in such work. Such removal and replacement shall be done, when directed in writing, at the Contractor's expense without additional cost to the Owner.

D. Preliminary Inspection / Pressure Testing:

E. Prior to request for preliminary inspection of arrival of Landscape Architect, accomplish the following:

1. All pipe and valves (including drain valves and quick couplers) and all other equipment except sprinkler heads in place.

2. Cap all risers except first riser from valve on each lateral (one uncapped riser per lateral), typical.

3. Purge all air from main lines.

F. Test of Mains and Valves: With all valves in place and closed, test at 150 psi minimum for 30 minutes without introduction of additional service or pumping pressure. Testing shall be done with one pressure gauge installed on the line where directed by Landscape Architect. Lines which show loss of pressure exceeding 5 psi at the end of specified test periods shall be rejected. The Contractor shall correct installations rejects, and retesting will be performed as specified herein.

G. Test of Laterals: Purge all air from laterals and cap all risers. Open valves and bring system to line pressure. Lateral lines will be inspected visually. Lines which evidence visible leakage shall be rejected.

H. Rejected Systems: Rejected systems or portions of systems requiring repair and retesting in the manner specified.

I. Final Inspection / Operations and Coverage Check: Prior to request for final inspection or arrival of Landscape Architect, accomplish the following:

1. Complete all work, including balancing, adjusting the system (pressure reducing valves, flow adjustment keys, nozzles, etc.) to provide optimum coverage without fogging.

J. Coverage Check: Operate each zone of the system for the Landscape Architect's inspection.

3.09 SYSTEMS OPERATION ORIENTATION

A. At time of and as part of the final inspection, conduct a training and orientation session for the Owner covering the operation, adjustment and maintenance of the irrigation system. The as-built drawings and operations manual shall be reviewed and all features explained. The Contractor shall notify the Architect in writing two weeks prior to the training and orientation session. The date and time of the session shall be subject to approval of the Architect.

3.10 FIELD QUALITY CONTROL

A. Contractor Quality Control: Employ / assign quality control personnel to monitor the work of this section for conformance to the requirements of the Contract Documents and to good construction practices.

1. Contractor is solely responsible for managing and controlling the quality of the work and conformance with the requirements of the Contract Documents.

END OF SECTION

SECTION 32 9300

PLANTS

PART 1 GENERAL

1.01 RELATED DOCUMENTS

A. Drawings and general provisions of the Contract, including General Conditions, Supplementary Conditions and Divisions 00 and 01 Specification Sections, apply to work of this section.

1.02 SECTION INCLUDES

A. Plants.

B. Fertilizers.

C. Planting Soils.

D. Mulches.

E. Weed-Control Barriers.

F. Pesticides.

G. Tree Stabilization.

1.03 SCOPE OF WORK

A. Work includes materials, equipment, and labor necessary for: topsoil and amendments, finish grading, planting of trees, shrubs, and groundcover; planting over structure, protection, maintenance, and warranty / replacement; and related items necessary to complete the work indicated on the Drawings and / or specified.

1.04 REFERENCES

A. References shall be the edition current as of the date of the Contract Documents.

B. ANSI/AHIA Z60.1 - American National Standard for Nursery Stock.

C. ASME B18.6.1 - Wood Screws.

D. ASTM A641/A641M - Standard Specification for Zinc-Coated (Galvanized) Carbon Steel Wire.

E. ASTM D1557 - Standard Test Methods for Laboratory Compaction Characteristics of Soil Using Modified Effort (56,000 ft-lbf/ft3 (2,700 kN-m/m3)).

F. ASTM D5268 - Standard Specification for Topsoil Used for Landscaping and Construction Purposes.

G. AWPA U1 - Use Category System: User Specification for Treated Wood.

H. EPA - United States Environmental Protection Agency.

I. USDA - United States Department of Agriculture.

J. USDA Handbook No. 60 - Diagnosis and Improvement of Saline and Alkali Soils.

1.05 SUBMITTALS

A. Refer to Section 01 3300 for submittal procedures.

B. Product Data: For each type of product indicated, including soils.

1. Plant Materials: Include quantities, sizes, quality and sources for plant materials. Submit maximum 30 days after award of contract. Include botanical names, quantities, sizes, physical locations of nurseries where plants were grown and suppliers for plant materials.

2. Plant Photographs: Include color photographs in digital format of each required species and size of plant material as it will be furnished to the Project. Take photographs from an angle depicting true size and condition of the typical plant to be furnished. Include a scale rod or other measuring device in each photograph. For species where more than 20 plants are required, include a minimum of three (3) photographs showing the average plant, the best quality plant, and the worst quality plant to be furnished. Identify each photograph with the full scientific name of the plant, plant size, and name of the growing nursery.

C. Samples for Verification: For each of the following:

1. Trees and Shrubs: Three samples of each variety and size delivered to the site for review. Maintain approved samples on-site as a standard for comparison.

2. Organic Mulch: 1-pint volume of each organic mulch required; in sealed plastic bags labeled with composition of materials by percentage of weight and source of mulch. Each Sample shall be typical of the lot of material to be furnished; provide an accurate representation of color, texture and organic makeup.

3. Wood Chip Mulch: 1-pint volume of wood chip mulch required; in sealed plastic bags labeled with composition of materials by percentage of weight and source of mulch. Each Sample shall be typical of the lot of material to be furnished; provide an accurate representation of color, texture and organic makeup.

4. Imported Topsoil: 1-pint volume of imported topsoil required; in sealed plastic bags labeled with composition of materials by percentage of weight and source of topsoil. Each Sample shall be typical of the lot of material to be furnished; provide an accurate representation of color, texture and organic makeup.

D. Qualification Data: For qualified landscape installer. Include list of similar projects completed by installer demonstrating Installer's capabilities and experience. Include project names, addresses and year completed, and include names and addresses of Owners' contact persons.

E. Product Certificates: For each type of manufactured product, from manufacturer and complying with the following:

1. Manufacturer's certified analysis of standard products.

F. Material Test Reports: For standardized ASTM D5268 topsoil. For compost (tested within 90 days prior to application).

G. Maintenance Instructions: Recommended procedures to be established by Owner for maintenance of plants during a calendar year. Submit before start of required maintenance periods.

H. Warranty: Sample of special warranty.

1.06 DEFINITIONS

A. Backfill: The earth used to replace or the act of replacing earth in an excavation.

B. Balled and Burlapped Stock: Plants dug with firm, natural balls of earth in which they were grown, with ball size not less than diameter and depth recommended by ANSI/AHIA Z60.1 for type and size of plant required; wrapped with burlap, tied, rigidly supported and drum laced with twine with the root flare visible at the surface of the ball as recommended by ANSI/AHIA Z60.1.

C. Balled and Potted Stock: Plants dug with firm, natural balls of earth in which they are grown and placed, unbroken, in a container. Ball size is not less than diameter and depth recommended by ANSI/AHIA Z60.1 for type and size of plant required.

D. Bare-Root Stock: Plants with a well-branched, fibrous-root system developed by transplanting or root pruning, with soil or growing medium removed, and with not less than minimum root spread according to ANSI/AHIA Z60.1 for type and size of plant required.

E. Container-Grown Stock: Healthy, vigorous, well-rooted plants grown in a container, with a well-established root system reaching sides of container and maintaining a firm ball when removed from container. Container shall be rigid enough to hold ball shape and protect root mass during shipping and be sized according to ANSI/AHIA Z60.1 for type and size of plant required.

F. Duff Layer: The surface layer of native topsoil that is composed of mostly decayed leaves, twigs and detritus.

G. Fabric Bag-Grown Stock: Healthy, vigorous, well-rooted plants established and grown in-ground in a porous fabric bag with well-established root system reaching sides of fabric bag. Fabric bag size is not less than diameter, depth and volume required by ANSI/AHIA Z60.1 for type and size of plant.

H. Finish Grade: Elevation of finished surface of planting soil.

I. Manufactured Topsoil: Soil produced off-site by homogeneously blending mineral soils or sand with stabilized organic soil amendments to produce topsoil or planting soil.

J. Pesticide: A substance or mixture intended for preventing, destroying, repelling, or mitigating a pest. This includes insecticides, miticides, herbicides, fungicides, rodenticides and molluscicides. It also includes substances or mixtures intended for use as a plant regulator, defoliant, or desiccant.

K. Pests: Living organisms that occur where they are not desired, or that cause damage to plants, animals, or people. These include insects, mites, grubs, mollusks (snails and slugs), rodents (gophers, moles and mice), unwanted plants (weeds), fungi, bacteria and viruses.

L. Planting Area: Areas to be planted.

M. Planting Soil: Standardized topsoil; existing, native surface topsoil; existing, in-place surface soil; imported topsoil; or manufactured topsoil that is modified with soil amendments and perhaps fertilizers to produce a soil mixture best for plant growth.

N. Plant; Plants; Plant Material: These terms refer to vegetation in general, including trees, shrubs, vines, ground covers, ornamental grasses, bulbs, corms, tubers, or herbaceous vegetation.

O. Root Flare: Also called "trunk flare." The area at the base of the plant's stem or trunk where the stem or trunk broadens to form roots; the area of transition between the root system and the stem or trunk.

P. Stem Girdling Roots: Roots that encircle the stems (trunks) of trees below the soil surface.

Q. Subgrade: Surface or elevation of subsoil remaining after excavation is complete, or the top surface of a fill or backfill before planting soil is placed.

R. Subsoil: All soil beneath the topsoil layer of the soil profile and typified by the lack of organic matter and soil organisms.

S. Surface Soil: Soil that is present at the top layer of the existing soil profile at the Project site. In undisturbed areas, the surface soil is typically topsoil; but in disturbed areas such as urban environments, the surface soil can be subsoil.

1.07 QUALITY ASSURANCE

A. Installer Qualifications: A qualified landscape installer whose work has resulted in successful establishment of plants.

1. Experience: Five (5) years of experience in landscape installation.

2. Installer's Field Supervision: Require installer to maintain an experienced full-time supervisor on Project site when work is in progress.

3. Personnel Certifications: Installer's field supervisor shall have certification in one (1) of the following categories from the Professional Landcare Network:

a. Certified Landscape Technician – Exterior, with installation and maintenance specialty area(s), designated CLT-Exterior.

B. Soil Analysis: For each unamended soil type, furnish soil analysis and a written report by a qualified soil-testing laboratory stating percentages of organic matter; gradation of sand, silt and clay content; cation exchange capacity; sodium absorption ratio; deleterious material; pH; and mineral and plant-nutrient content of the soil.

1. Testing methods and written recommendations shall comply with USDA Handbook No. 60.

2. The soil-testing laboratory shall oversee soil sampling; with depth, location and number of samples to be taken per instructions from Landscape Architect. A minimum of three representative samples shall be taken from varied locations for each soil to be used or amended for planting purposes.

3. Report suitability of tested soil for plant growth.

a. Based upon the test results, state recommendations for soil treatments and soil amendments to be incorporated. State recommendations in weight per 1000 sq. ft. or volume per cu. yd. for nitrogen, phosphorus and potash nutrients and soil amendments to be added to produce satisfactory planting soil suitable for healthy, viable plants.

b. Report presence of problem salts, minerals, or heavy metals, including aluminum, arsenic, barium, cadmium, chromium, cobalt, lead, lithium and vanadium. If such problem materials are present, provide additional recommendations for corrective action.

C. Provide quality, size, genus, species and variety of plants indicated, complying with applicable requirements in ANSI/AHIA Z60.1.

D. Measurements: Measure according to ANSI/AHIA Z60.1. Do not prune to obtain required sizes.

1. Trees and Shrubs: Measure with branches and trunks or canes in their normal position. Take height measurements from or near the top of the root flare for field-grown stock and container grown stock. Measure main body of tree or shrub for height and spread; do not measure branches or roots tip to tip. Take caliper measurements 6-inches above the root flare for trees up to 4-inch caliper size, and 12-inches above the root flare for larger sizes.

2. Other Plants: Measure with stems, petioles and foliage in their normal position.

E. Plant Material Observation: Landscape Architect may observe plant material either at place of growth or at site before planting for compliance with requirements for genus, species, variety, cultivar, size and quality. Landscape Architect retains right to observe trees and shrubs further for size and condition of balls and root systems, pests, disease symptoms, injuries and latent defects, and to reject unsatisfactory or defective material at any time during progress of work. Remove rejected trees or shrubs immediately from Project site.

1. Notify Landscape Architect of sources of planting materials fourteen working days in advance of delivery to site.

1.08 PRE-INSTALLATION CONFERENCE

A. Two (2) weeks prior to start of plant installation, Contractor shall schedule a pre-installation conference at the job site to review the project conditions and installation requirements.

B. Persons attending pre-installation conference shall include the Contractor, landscape installer, Architect, Landscape Architect, and Owner.

1.09 DELIVERY, STORAGE AND HANDLING

A. Packaged Materials: Deliver packaged materials in original, unopened containers showing weight, certified analysis, name and address of manufacturer, and indication of conformance with state and federal laws if applicable.

B. Bulk Materials:

1. Do not dump or store bulk materials near structures, utilities, walkways and pavements, or on existing turf areas or plants.

2. Provide erosion-control measures to prevent erosion or displacement of bulk materials, discharge of soil-bearing water runoff, and airborne dust reaching adjacent properties, water conveyance systems, or walkways.

3. Accompany each delivery of bulk fertilizers, lime and soil amendments with appropriate certificates.

C. Do not prune trees and shrubs before delivery. Protect bark, branches and root systems from sun scald, drying, wind burn, sweating, whipping and other handling and tying damage. Do not bend or bind-tie trees or shrubs in such a manner as to destroy their natural shape. Provide protective covering of plants during shipping and delivery. Do not drop plants during delivery and handling.

D. Handle planting stock by root ball.

E. Deliver plants after preparations for planting have been completed and install immediately. If planting is delayed more than six hours after delivery, set plants and trees in their appropriate aspect (sun, filtered sun, or shade), protect from weather and mechanical damage, and keep roots moist.

1. Set balled stock on ground and cover ball with soil, peat moss, sawdust, or other acceptable material.

2. Do not remove container-grown stock from containers before time of planting.

3. Water root systems of plants stored on-site deeply and thoroughly with a fine-mist spray. Water as often as necessary to maintain root systems in a moist, but not overly-wet condition.

1.10 PROJECT CONDITIONS

A. Field Measurements: Verify actual grade elevations, service and utility locations, irrigation system components, and dimensions of plantings and construction contiguous with new plantings by field measurements before proceeding with planting work.

B. Interruption of Existing Services or Utilities: Do not interrupt services or utilities to facilities occupied by Owner or others unless permitted under the following conditions and then only after arranging to provide temporary services or utilities according to requirements indicated:

1. Notify Owner no fewer than seven days in advance of proposed interruption of each service or utility.

2. Do not proceed with interruption of services or utilities Owner's written permission.

C. Planting Restrictions: Plant during one of the following periods. Coordinate planting periods with maintenance periods to provide required maintenance from date of Substantial Completion.

1. Spring Planting: March – May.

2. Fall Planting: September 15th – November 1st.

D. Weather Limitations: Proceed with planting only when existing and forecasted weather conditions permit planting to be performed when beneficial and optimum results may be obtained. Apply products during favorable weather conditions according to manufacturer's written instructions and warranty requirements.

E. Planting Restrictions: Do not plant during the following conditions unless approved.

1. Cold Weather: When ambient temperature is below 35 degrees F.

2. Hot Weather: When temperature exceeds 90 degrees F.

3. Wet Weather: When soil becomes saturated.

4. Windy Weather: When wind velocity exceeds 30 mph.

F. Coordination with Turf Areas (Lawns): Plant trees, shrubs and other plants after finish grades are established and before planting turf areas unless otherwise indicated.

1. When planting trees, shrubs and other plants after planting turf areas, protect turf areas and promptly repair damage caused by planting operations.

1.11 WARRANTY

A. Special Warranty: Installer agrees to repair or replace plantings and accessories that fail in materials, workmanship, or growth within specified warranty period.

1. Failures include, but are not limited to, the following:

a. Death and unsatisfactory growth, except for defects resulting from abuse, lack of adequate maintenance, or neglect by Owner, or incidents that are beyond Contractor's control.

b. Structural failures including plantings falling or blowing over.

c. Faulty performance of tree stabilization.

d. Deterioration of metals, metal finishes and other materials beyond normal weathering.

2. Warranty Periods from Date of Substantial Completion:

a. Trees, Shrubs, Vines, and Ornamental Grasses: 12 months.

b. Ground Covers, Biennials, Perennials, and Other Plants: 12 months.

3. Include the following remedial actions as a minimum:

a. Immediately remove dead plants and replace unless required to plant in the succeeding planting season.

b. Replace plants that are more than 25 percent dead or in an unhealthy condition at end of warranty period.

c. A limit of one replacement of each plant will be required except for losses or replacements due to failure to comply with requirements.

d. Provide extended warranty for period equal to original warranty period, for replaced plant material.

1.12 MAINTENANCE SERVICE

A. Initial Maintenance Service for Trees and Shrubs: Provide maintenance by skilled employees of landscape Installer. Maintain as required in Part 3 of this Section. Begin maintenance immediately after plants are installed and continue until plantings are acceptably healthy and well established but for not less than maintenance period below.

1. Maintenance Period: Twelve (12) months from date of Substantial Completion.

B. Initial Maintenance Service for Ground Cover and Other Plants: Provide maintenance by skilled employees of landscape Installer. Maintain as required in Part 3 of this Section. Begin maintenance immediately after plants are installed and continue until plantings are acceptably healthy and well established but for not less than maintenance period below.

1. Maintenance Period: Twelve (12) months from date of Substantial Completion.

C. Continuing Maintenance Proposal: From Installer to Owner, in the form of a standard yearly (or other period) maintenance agreement, starting on date initial maintenance service is concluded. State services, obligations, conditions and terms for agreement period, and for future renewal options.

PART 2 PRODUCTS

2.01 PLANT MATERIAL

A. General: Furnish nursery-grown plants true to genus, species, variety, cultivar, stem form, shearing, and other features indicated in Plant Schedule or Plant Legend shown on Drawings and complying with ANSI/AHIA Z60.1; and with healthy root systems developed by transplanting or root pruning. Provide well-shaped, fully branched, healthy, vigorous stock, densely foliated when in leaf and free of disease, pests, eggs, larvae and defects such as knots, sun scald, injuries, abrasions and disfigurement.

1. Trees with damaged, crooked, or multiple leaders; tight vertical branches where bark is squeezed between two (2) branches or between branch and trunk ("included bark"); crossing trunks; cut-off limbs more than 3/4-inches in diameter; or with stem girdling roots will be rejected.

2. Collected Stock: Do not use plants harvested from the wild, from native stands, from an established landscape planting, or not grown in a nursery unless otherwise indicated.

B. Provide plants of sizes, grades and ball or container sizes complying with ANSI/AHIA Z60.1 for types and form of plants required. Plants of a larger size may be used if acceptable to Landscape Architect, with a proportionate increase in size of roots or balls.

C. Root-Ball Depth: Furnish trees and shrubs with root balls measured from top of root ball, which shall begin at root flare according to ANSI/AHIA Z60.1. Root flare shall be visible before planting.

D. Labeling: Label at least one (1) plant of each variety, size and caliper with a securely attached, waterproof tag bearing legible designation of common name and full scientific name, including genus and species. Include nomenclature for hybrid, variety, or cultivar, if applicable for the plant as shown on Drawings.

E. If formal arrangements or consecutive order of plants is shown on Drawings, select stock for uniform height and spread, and number the labels to assure symmetry in planting.

2.02 FERTILIZERS

A. Slow-Release Fertilizer: Granular or pelleted fertilizer consisting of 50 percent water-insoluble nitrogen, phosphorus and potassium in the following composition:

1. Composition: 20 percent nitrogen, 10 percent phosphorous, and 10 percent potassium, by weight.

2.03 PLANTING SOILS

A. Planting Soil:

1. Use imported topsoil mix containing 10% organic matter (typically around 40% compost). Soil portion must be sand or sandy loam as defined by the USDA.

2.04 MULCHES

A. Fine Wood Chip Mulch: Free from deleterious materials, fine ground wood chips recycled from trees, aged to dark brown, and suitable as a top dressing of trees and shrubs, consisting of the following:

1. Type: Wood and Bark Chips.

2. Size Range: 1/2" and smaller.

3. Color: dark brown.

B. Organic Compost:

1. Type: Fine Grade Compost.

2. Organic Matter: > 40%.

3. Carbon to Nitrogen Ratio: < 25.

4. Free of Weed Seeds.

5. Compost Stability: < 7 mg CO_2 / gr. OM / day.

6. Major Nutrients:

Total Nitrogen – 1.7%

Phosphorus - 0.84%

Sulfate – 44mg / kg

Calcium – 2%

Magnesium - 0.38%

2.05 PESTICIDES AND HERBICIDES

A. General: Pesticide registered and approved by EPA, acceptable to authorities having jurisdiction, and of type recommended by manufacturer for each specific problem and as required for Project conditions and application. Do not use restricted pesticides unless authorized in writing by authorities having jurisdiction.

B. Pre-Emergent Herbicide (Selective and Non-Selective): Effective for controlling the germination or growth of weeds within planted areas at the soil level directly below the mulch layer.

C. Post-Emergent Herbicide (Selective and Non-Selective): Effective for controlling weed growth that has already germinated.

2.06 TREE STABILIZATION MATERIALS

A. Stakes and Guys:

1. Upright and Guy Stakes: Rough-sawn, sound, new hardwood, free of knots, holes, cross grain and other defects, 2-by-2-inch nominal by length indicated, pointed at one end.

2. Flexible Ties: Wide rubber or elastic bands or straps of length required to reach stakes or turnbuckles.

3. Guys and Tie Wires: ASTM A641/A641M, Class 1, galvanized-steel wire, two-strand, twisted, 0.106-inch in diameter.

4. Tree-Tie Webbing: UV-resistant polypropylene or nylon webbing with brass grommets.

5. Guy Cables: Five-strand, 3/16-inch diameter, galvanized-steel cable, with zinc-coated turnbuckles, a minimum of 3-inches long, with two 3/8-inch galvanized eyebolts.

6. Flags: Standard surveyor's plastic flagging tape, white, 6-inches long.

7. Proprietary Staking-and-Guying Devices: Proprietary stake and adjustable tie systems to secure each new planting by plant stem; sized as indicated and per manufacturer's written recommendations.

B. Root-Ball Stabilization Materials:

1. Upright Stakes and Horizontal Hold-Down: Rough-sawn, sound, new hardwood or softwood, free of knots, holes, cross grain and other defects, 2-inch by 2-inch nominal by length indicated; stakes pointed at one end.

2. Wood Screws: ASME B18.6.1.

2.07 MISCELLANEOUS PRODUCTS

A. Wood Pressure-Preservative Treatment: AWPA U1, use category UC4A, with waterborne preservative for soil and freshwater use, acceptable to authorities having jurisdiction, and containing no arsenic; including ammoniacal copper arsenate, ammoniacal copper zinc arsenate, and chromated copper arsenate.

B. Root Barrier: Black, molded, modular panels manufactured with 50 percent recycled polyethylene plastic with ultraviolet inhibitors, 85 mils thick, with vertical root deflecting ribs protruding 3/4-inch out from panel, and each panel 24-inches wide.

C. Antidesiccant: Water-insoluble emulsion, permeable moisture retarder, film forming, for trees and shrubs. Deliver in original, sealed and fully labeled containers and mix according to manufacturer's written instructions.

D. Burlap: Non-synthetic, biodegradable.

PART 3 EXECUTION

3.01 COORDINATION

A. Review, coordinate and accommodate work of other trades that interface with, affect or are affected by the work of this section so as to facilitate the execution of the overall Work of this project in a coordinated and efficient manner.

3.02 EXAMINATION

A. Examine areas to receive plants for compliance with requirements and conditions affecting installation and performance.

1. Verify that no foreign or deleterious material or liquid such as paint, paint washout, concrete slurry, concrete layers or chunks, cement, plaster, oils, gasoline, diesel fuel, paint thinner, turpentine, tar, roofing compound, or acid has been deposited in soil within a planting area.

2. Do not mix or place soils and soil amendments in frozen, wet, or muddy conditions.

3. Suspend soil spreading, grading and tilling operations during periods of excessive soil moisture until the moisture content reaches acceptable levels to attain the required results.

4. Uniformly moisten excessively dry soil that is not workable and which is too dusty.

B. Proceed with installation only after unsatisfactory conditions have been corrected.

C. If contamination by foreign or deleterious material or liquid is present in soil within a planting area, remove the soil and contamination as directed by Landscape Architect and replace with new planting soil.

3.03 PREPARATION

A. Protect structures, utilities, sidewalks, pavements, pavers, other facilities, turf areas, and existing plants from damage caused by planting operations.

B. Install erosion-control measures to prevent erosion or displacement of soils and discharge of soil-bearing water runoff or airborne dust to adjacent properties and walkways.

C. Plants shall be laid out for review and approval of Landscape Architect prior to installation in the ground at all areas. Stake locations, outline areas, adjust locations when requested, and obtain Landscape Architect's acceptance of layout before excavating or planting. Make minor adjustments as required.

D. Apply antidesiccant to trees and shrubs using power spray to provide an adequate film over trunks (before wrapping), branches, stems, twigs and foliage to protect during digging, handling and transportation.

1. If deciduous trees or shrubs are moved in full leaf, spray with antidesiccant at nursery before moving and again two weeks after planting.

3.04 PLANTING BED PREPARATION

A. Import topsoil mix of sufficient organic content and depth to meet the requirements. All soil areas in planting beds, excluding turf areas, disturbed or compacted during construction, and not covered by buildings or pavement, shall be restored as described below.

B. Scarification: scarify or till subgrade in two directions to 6-inches depth. Entire surface shall be disturbed by scarification. Do not scarify within drip line of existing trees to be retained. Apply superphosphate fertilizer directly to subgrade before loosening.

C. Use imported topsoil mix containing 10% organic matter (typically around 40% compost). Soil portion must be sand or sandy loam as defined by the USDA. Place 3-inches of imported topsoil mix on surface and till into 2-inches of soil. Place 3-inches of imported topsoil mix on surface and till into 2-inches of soil. Place second lift of 3-inches topsoil mix on surface.

D. Rake beds to smooth and remove surface rocks larger than 2-inches in diameter. Mulch planting beds with 3-inches to 4-inches of fine wood chip mulch.

E. Setbacks: To prevent uneven settling, do not compost-amend soils within 3 feet on center of utility infrastructure (poles, vaults, meters, etc.). Within one foot of pavement edge, curbs and sidewalks; soil should be compacted to approximately 90% max. modified proctor density (ASTM D1557) to ensure a firm surface. Do not compact within tree protection zone. See City of Tacoma Standard Plans LS-08 and LS-09.

F. Finish Grading: Grade planting areas to a smooth, uniform surface plane with loose, uniformly fine texture. Roll and rake, remove ridges, and fill depressions to meet finish grades.

G. Before planting, obtain Landscape Architect's acceptance of finish grading; restore planting areas if eroded or otherwise disturbed after finish grading.

3.05 EXCAVATION FOR TREES AND SHRUBS

A. Planting Pits and Trenches: Excavate circular planting pits with sides sloping inward at a 45-degree angle. Excavations with vertical sides are not acceptable. Trim perimeter of bottom leaving center area of bottom raised slightly to support root ball and assist in drainage away from center. Do not further disturb base. Ensure that root ball will sit on undisturbed base soil to prevent settling. Scarify sides of planting pit smeared or smoothed during excavation.

1. Excavate approximately three times as wide as ball diameter for balled and burlapped stock.

2. Excavate at least 12-inches wider than root spread and deep enough to accommodate vertical roots for bare-root stock.

3. Do not excavate deeper than depth of the root ball, measured from the root flare to the bottom of the root ball.

4. If area under the plant was initially dug too deep, add soil to raise it to the correct level and thoroughly tamp the added soil to prevent settling.

5. Maintain required angles of repose of adjacent materials as shown on the Drawings. Do not excavate subgrades of adjacent paving, structures, hardscapes, or other new or existing improvements.

6. Maintain supervision of excavations during working hours.

7. Keep excavations covered or otherwise protected when unattended by Installer's personnel.

8. If drain tile is shown on Drawings or required under planting areas, excavate to top of porous backfill over tile.

B. Subsoil and topsoil removed from excavations may not be used as planting soil.

C. Obstructions: Notify Landscape Architect if unexpected rock or obstructions detrimental to trees or shrubs are encountered in excavations.

1. Hardpan Layer: Drill 6-inch diameter holes, 24-inches apart, into free-draining strata or to a depth of 10 feet, whichever is less, and backfill with free-draining material.

D. Drainage: Notify Landscape Architect if subsoil conditions evidence unexpected water seepage or retention in tree or shrub planting pits.

3.06 TREE, SHRUB, AND VINE PLANTING

A. Before planting, verify that root flare is visible at top of root ball according to ANSI/AHIA Z60.1. If root flare is not visible, remove soil in a level manner from the root ball to where the top-most root emerges from the trunk. After soil removal to expose the root flare, verify that root ball still meets size requirements.

B. Remove stem girdling roots and kinked roots. Remove injured roots by cutting cleanly; do not break.

C. Set balled and burlapped stock plumb and in center of planting pit or trench with root flare 2-inches above adjacent finish grades.

1. Use planting soil for backfill.

2. After placing some backfill around root ball to stabilize plant, carefully cut and remove burlap, rope and wire baskets from tops of root balls and from sides, but do not remove from under root balls. Remove pallets, if any, before setting. Do not use planting stock if root ball is cracked or broken before or during planting operation.

3. Backfill around root ball in layers, tamping to settle soil and eliminate voids and air pockets. When planting pit is approximately one-half filled, water thoroughly before placing remainder of backfill. Repeat watering until no more water is absorbed.

4. Place planting tablets in each planting pit when pit is approximately one-half filled; in amounts recommended in soil reports from soil-testing laboratory. Place tablets beside the root ball about 1-inch from root tips; do not place tablets in bottom of the hole.

5. Continue backfilling process. Water again after placing and tamping final layer of soil.

D. Set container-grown stock plumb and in center of planting pit or trench with root flare 1-inch above adjacent finish grades.

1. Use planting soil for backfill.

2. Carefully remove root ball from container without damaging root ball or plant.

3. Backfill around root ball in layers, tamping to settle soil and eliminate voids and air pockets. When planting pit is approximately one-half filled, water thoroughly before placing remainder of backfill. Repeat watering until no more water is absorbed.

4. Place planting tablets in each planting pit when pit is approximately one-half filled; in amounts recommended in soil reports from soil-testing laboratory. Place tablets beside the root ball about 1-inch from root tips; do not place tablets in bottom of the hole.

5. Continue backfilling process. Water again after placing and tamping final layer of soil.

E. Set fabric bag-grown stock plumb and in center of planting pit or trench with root flare 1-inch above adjacent finish grades.

1. Use planting soil for backfill.

2. Carefully remove root ball from fabric bag without damaging root ball or plant. Do not use planting stock if root ball is cracked or broken before or during planting operation.

3. Backfill around root ball in layers, tamping to settle soil and eliminate voids and air pockets. When planting pit is approximately one-half filled, water thoroughly before placing remainder of backfill. Repeat watering until no more water is absorbed.

4. Place planting tablets in each planting pit when pit is approximately one-half filled; in amounts recommended in soil reports from soil-testing laboratory. Place tablets beside the root ball about 1-inch from root tips; do not place tablets in bottom of the hole.

5. Continue backfilling process. Water again after placing and tamping final layer of soil.

F. Set and support bare-root stock in center of planting pit or trench with root flare 1-inch above adjacent finish grade.

1. Use planting soil for backfill.

2. Spread roots without tangling or turning toward surface, and carefully work backfill around roots by hand. Puddle with water until backfill layers are completely saturated. Plumb before backfilling and maintain plumb while working backfill around roots and placing layers above roots.

3. Place planting tablets in each planting pit when pit is approximately one-half filled; in amounts recommended in soil reports from soil-testing laboratory. Place tablets beside soil-covered roots about 1-inch from root tips; do not place tablets in bottom of the hole or touching the roots.

4. Continue backfilling process. Water again after placing and tamping final layer of soil.

G. When planting on slopes, set the plant so the root flare on the uphill side is flush with the surrounding soil on the slope; the edge of the root ball on the downhill side will be above the surrounding soil. Apply enough soil to cover the downhill side of the root ball.

3.07 TREE, SHRUB, AND VINE PRUNING

A. Remove only dead, dying or broken branches. Do not prune for shape.

B. Prune, thin and shape trees, shrubs, and vines as directed by Landscape Architect.

C. Prune, thin and shape trees, shrubs, and vines according to standard professional horticultural and arboricultural practices. Unless otherwise indicated by Landscape Architect, do not cut tree leaders; remove only injured, dying, or dead branches from trees and shrubs; and prune to retain natural character.

D. Do not apply pruning paint to wounds.

3.08 TREE STABILIZATION

A. Install trunk stabilization as follows unless otherwise indicated:

1. Upright Staking and Tying: Stake trees of 2-inch through 5-inch caliper. Stake trees of less than 2-inch caliper only as required to prevent wind tip out. Use a minimum of two (2) stakes of length required to penetrate at least 18-inches below bottom of backfilled excavation and to extend to the dimension shown on Drawings above grade. Set vertical stakes and space to avoid penetrating root balls or root masses.

2. Use two (2) stakes for trees up to 12 feet high and 2-1/2-inches or less in caliper; three (3) stakes for trees less than 14 feet high and up to 4-inches in caliper. Space stakes equally around trees.

3. Support trees with two (2) strands of tie wire, connected to the brass grommets of tree-tie webbing at contact points with tree trunk. Allow enough slack to avoid rigid restraint of tree.

B. Staking and Guying: Stake and guy trees more than 14 feet in height and more than 3-inches in caliper unless otherwise indicated. Securely attach no fewer than three (3) guys to stakes 30-inches long, driven to grade.

1. Site-Fabricated Staking-and-Guying Method:

a. Support trees with bands of flexible ties at contact points with tree trunk and reaching to turnbuckle. Allow enough slack to avoid rigid restraint of tree.

b. Support trees with strands of cable or multiple strands of tie wire, connected to the brass grommets of tree-tie webbing at contact points with tree trunk and reaching to turnbuckle. Allow enough slack to avoid rigid restraint of tree.

c. Attach flags to each guy wire, 30-inches above finish grade.

d. Paint turnbuckles with luminescent white paint.

2. Proprietary Staking and Guying Device: Install staking and guying system sized and positioned as recommended by manufacturer unless otherwise indicated and according to manufacturer's written instructions.

3.09 ROOT-BARRIER INSTALLATION

A. Install root barrier where trees are planted within 60-inches of paving , walls, curbs, walkways, and pavers unless otherwise shown on Drawings.

B. Align root barrier vertically and run it linearly along and adjacent to the paving or other hardscape elementsto be protected from invasive roots.

C. Install root barrier continuously for a distance of 60-inches in each direction from the tree trunk, for a total distance of 10 feet per tree. If trees are spaced closer, use a single continuous piece of root barrier.

1. Position top of root barrier flush with finish grade.

2. Overlap root barrier a minimum of 12-inches at joints.

3. Do not distort or bend root barrier during construction activities.

4. Do not install root barrier surrounding the root ball of tree.

3.10 GROUND COVER OR PLANT PLANTING

A. Set out and space ground cover other than trees, shrubs, and vines as indicated in even rows with triangular spacing.

B. Use planting soil for backfill.

C. Dig holes large enough to allow spreading of roots.

D. For rooted cutting plants supplied in flats, plant each in a manner that will minimally disturb the root system but to a depth not less than two nodes.

E. Work soil around roots to eliminate air pockets and leave a slight saucer indentation around plants to hold water.

F. Water thoroughly after planting, taking care not to cover plant crowns with wet soil.

G. Protect plants from hot sun and wind; remove protection if plants show evidence of recovery from transplanting shock.

3.11 PLANTING AREA MULCHING

A. Install weed-control barriers before mulching according to manufacturer's written instructions. Completely cover area to be mulched, overlapping edges a minimum of 12-inches and secure seams with galvanized pins.

B. Mulch backfilled surfaces of planting areas and other areas indicated.

1. Wood Chip Mulch in Planting Areas: Apply 3-inch average thickness of mulch over whole surface of planting area, and finish level with adjacent finish grades. Do not place mulch within 3-inches of trunks or stems.

3.12 PLANT MAINTENANCE

A. Maintain plantings by pruning, cultivating, watering, weeding, fertilizing, mulching, restoring planting saucers, adjusting and repairing tree-stabilization devices, resetting to proper grades or vertical position, and performing other operations as required to establish healthy, viable plantings. Spray or treat as required to keep trees and shrubs free of insects and disease.

B. Fill in as necessary soil subsidence that may occur because of settling or other processes. Replace mulch materials damaged or lost in areas of subsidence.

C. Apply treatments as required to keep plant materials, planted areas and soils free of pests and pathogens or disease. Use integrated past management practices whenever possible to minimize the use of pesticides and reduce hazards. Treatments include physical controls such as hosing off foliage, mechanical controls such as traps, and biological control agents.

3.13 PESTICIDE APPLICATION

A. Apply pesticides and other chemical products and biological control agents in accordance with authorities having jurisdiction and manufacturer's written recommendations. Coordinate applications with Owner's operations and others in proximity to the Work. Notify Owner before each application is performed.

B. Pre-Emergent Herbicides (Selective and Non-Selective): Apply to tree, shrub and ground-cover areas in accordance with manufacturer's written recommendations. Do not apply to seeded areas.

C. Post-Emergent Herbicides (Selective and Non-Selective): Apply only as necessary to treat already-germinated weeds and in accordance with manufacturer's written recommendations.

3.14 CLEANUP AND PROTECTION

A. During planting, keep adjacent paving and construction clean and work area in an orderly condition.

B. Protect plants from damage due to landscape operations and operations of other contractors and trades. Maintain protection during installation and maintenance periods. Treat, repair, or replace damaged plantings.

C. After installation and before Substantial Completion, remove nursery tags, nursery stakes, tie tape, labels, wire, burlap and other debris from plant material, planting areas, and Project site.

3.15 DISPOSAL

A. Remove surplus soil and waste material including excess subsoil, unsuitable soil, trash and debris and legally dispose of them off Owner's property.

3.16 FIELD QUALITY CONTROL

A. Contractor Quality Control: Employ / assign quality control personnel to monitor the work of this section for conformance to the requirements of the Contract Documents and to good construction practices.

1. Contractor is solely responsible for managing and controlling the quality of the work and conformance with the requirements of the Contract Documents.

END OF SECTION

SECTION 33 1000

SITE WATER DISTRIBUTION SYSTEMS

PART 1 GENERAL

1.01 RELATED DOCUMENTS

A. Drawings and general provisions of the Contract, including General Conditions, Supplementary Conditions and Divisions 00 and 01 Specification Sections, apply to work of this section.

1.02 SECTION INCLUDES

A. Domestic Water Service Connection and Appurtenances.

B. Fire Department Connection.

C. Trenching, Bedding and Backfilling.

1.03 REFERENCES

A. References shall be the edition current as of the date of the Contract Documents.

1. AWWA C104/A21.4 - Cement-Mortar Lining for Ductile Iron Pipe and Fittings.

2. AWWA C110/A21.10 - Ductile-Iron and Gray-Iron Fittings.

3. AWWA C111/A21.11 - Rubber-Gasket Joints for Ductile-Iron Pressure Pipe and Fittings.

4. AWWA C151/A21.51 - Ductile-Iron Pipe, Centrifugally Cast.

5. AWWA C153/A21.53 - Ductile-Iron Compact Fittings.

6. AWWA C600 - Installation of Ductile-Iron Mains and Their Appurtenances.

7. AWWA C901 - Polyethylene (PE) Pressure Pipe and Tubing, 3/4 In. (19 mm) Through 3 In. (76 mm), for Water Service.

8. WSDOT 7-09 - WSDOT STD SPEC - Water Mains.

B. City of Everett Construction Standards.

1.04 SUBMITTALS

A. Refer to Section 01 3300 for submittal procedures.

B. Pressure and Bacteriological Test Reports: Provide test reports to the Architect / Civil Engineer as soon as possible after completion of the Work.

C. Provide product data for the following:

1. 3-inch and Above Water Piping and Fittings

2. Fire Department Connection Assembly

3. Fire Hydrant Assembly

4. Accessories

1.05 QUALITY ASSURANCE

A. Products, where marked for compliance with code or test standards, shall also mark specific standard as required in the Contract Documents.

B. Work shall conform to City of Everett requirements.

C. Valves: Manufacturer's name and pressure rating shall be marked on valve body.

1.06 DELIVERY, STORAGE AND HANDLING

A. Deliver and store valves in shipping containers with labeling in place.

B. Deliver and store pipe in conformance with manufacturer's recommendations.

1.07 PROJECT CONDITIONS

A. Coordinate water service connections with City of Everett, and conform to their installation standards and materials requirements.

B. Field verify that the location and elevations of the water distribution system indicated on the Drawings accommodates the existing utilities, structures and conditions on the site; review and resolve any conflicts with Architect / Civil Engineer prior to start of trenching.

C. Locate, mark and protect existing utilities as specified in Section 02 1725 prior to start of trenching.

D. Schedule shutdown of existing utilities affected by work of this section as specified in Section 02 1725.

1.08 SAFETY CONSIDERATIONS

A. The Contractor is solely responsible for developing a safety plan to protect workers and the public from injury or harm conforming to all Local, State and Federal requirements and for executing and enforcing it on the Project site.

1. Contractor shall consult with their own Geotechnical Engineering expert for determining soil classification relative to safe sloping of soils.

2. Contractor shall determine safe excavation and dewatering methods, monitor excavations and earthwork operations for safety concerns and provide shoring and other protection as required to protect workers.

3. It is not the intent of the Contract Documents to dictate any unsafe construction means or methods; Contractor shall determine means and methods of construction conforming to their safety plan as required to construct work shown on the Contract Documents.

PART 2 PRODUCTS

2.01 3-INCH AND ABOVE WATER PIPING AND FITTINGS

A. Ductile Iron Pipe for Water Distribution System: Ductile iron pipe shall conform to AWWA C151/A21.51 Class 52 and have a cement mortar lining conforming to AWWA C104/A21.4. All pipes shall be joined using non-restrained joints which shall be rubber gaskets, push on type or mechanical joint, conforming to AWWA C111/A21.11.

B. All fittings for ductile iron pipe shall be ductile iron compact fittings conforming to AWWA C153/A21.53 or Class 250 gray iron conforming to AWWA C110/A21.10 and AWWA C111/A21.11. All shall be cement mortar lined conforming to AWWA C104/A21.4. Plain end fittings shall be ductile iron if mechanical joint retainer glands are installed on the plain ends. All fittings shall be connected by flanges or mechanical joints.

2.02 3-INCH AND BELOW WATER PIPING

A. High density polyethylene pipe (HDPE), minimum pressure class 200 psi conforming to AWWA C901.

2.03 VALVES

A. Gate Valves up to 12-inch: Shall conform to City of Everett's Standards.

2.04 FIRE DEPARTMENT CONNECTION

A. Conform to the detail on the Drawings.

2.05 BEDDING AND BACKFILL MATERIAL

A. Pipe Bedding and Trench Backfill: As specified in Section 31 2333.

2.06 THRUST BLOCKS

A. Conform to City of Everett 's Standards.

2.07 ACCESSORIES

A. Detectable Warning Tape and Tracer Wire: As specified in Section 31 2333.

PART 3 EXECUTION

3.01 COORDINATION

A. Review, coordinate and accommodate work of other sections that interface with, affect or are affected by the work of this section so as to facilitate the execution of the overall work of this project in a coordinated and efficient manner.

B. Coordinate horizontal and vertical layout of water distribution system to accommodate new and existing utilities, review conflicts with Architect / Civil Engineer prior to start of trenching.

C. Coordinate work and service connections with City of Everett. Provide 48 hours advance notice prior to start of work.

3.02 HORIZONTAL AND VERTICAL CONTROL

A. Employ a Land Surveyor registered in the State of Washington to lay out and stake the Work and provide horizontal and vertical control; refer to Section 01 7000 for additional requirements.

1. Locate and protect survey control and reference points.

2. Provide field engineering services. Establish elevations, lines, and levels, utilizing recognized engineering survey practices.

B. Lay out and stake utility lines prior to starting trenching.

3.03 PREPARATION

A. Locate and mark existing utilities as required in Section 02 1725.

B. Schedule shutdown of existing utilities affected by work of this section as specified in Section 02 1725.

3.04 TRENCHING, BEDDING AND BACKFILL

A. Trenching, Bedding and Backfill: As specified in Section 31 2333 for excavation, trenching, bedding and backfilling.

B. Conform to the details shown on the Drawings.

3.05 PIPING SYSTEMS – COMMON REQUIREMENTS

A. General Locations and Arrangements: Drawings indicate general location and arrangement of piping systems. Indicated locations and arrangements were used to size pipe and calculate friction loss, expansion, pump sizing, and other design considerations.

B. Install piping at depth and slope indicated on plans.

C. Protect inside of pipe from contamination with dirt or water. Keep dirt and water out of the open end of the pipe during installation; install temporary cap over end of pipe at end of each work day.

D. Install components with pressure rating equal to or greater than system test pressure.

E. Install piping free of sags and bends.

F. Locate groups of pipes parallel to each other, spaced to permit valve servicing.

G. Install fittings for changes in direction and branch connections.

3.06 INSTALLATION – PIPING

A. Connection to Water Main: Coordinate with City of Everett.

B. Install ductile iron piping according to AWWA C600 and manufacturer's installation instructions.

C. Bury service line piping with a minimum cover of 36 inches. Maximum cover shall conform to manufacturer's recommendations.

D. Protect inside of pipe from contamination with dirt or water. Keep dirt and water out of the open end of the pipe during installation; install temporary cap over end of pipe at end of each work day.

E. Water Main / Sanitary Sewer crossings shall provide 18 inches minimum vertical separation and meet the requirements of the City of Tacoma Public Works and City of Everett's Standards.

3.07 INSTALLATION – VALVE

A. General Application: Install corporation stop in accordance with City of Everett requirements and manufacturer's installation instructions.

B. Valve box and top shall be manufactured in accordance with City of Everett DWG _____.

C. Install valve box at valve, flush top with pavement.

D. Protect valve interior from contamination by dirt and water, install temporary cap over open ends at end of work day.

3.08 INSTALLATION – IDENTIFICATION

A. Install continuous detectable warning tape during backfilling of trench for underground water service piping. Locate 18-inches above the pipe crown, or 12-inches below finished grade (whichever is deeper).

B. Install tracer wire in conformance with City of Everett.

3.09 HYDROSTATIC PRESSURE TESTS

A. Test in accordance with WSDOT 7-09.

B. Prepare report of testing results for each different line / system installed and submit to Architect / Civil Engineer.

1. Report shall be on the Contractor's letterhead and list date of test, line / system tested, test pressure and duration, quantity of water required to restore test pressure, person witnessing the test.

3.10 CLEANING AND BACTERIOLOGICAL TESTING

A. Water line shall not be put into service until after cleaning has been completed and tests are satisfactory.

B. Flush out, clean and disinfect water lines / valves in accordance with City of Everett. Water sampling shall be done by the testing laboratory.

C. Testing Laboratory: Approved by Washington State Department of Health for bacteriological testing.

D. Bacteriological Testing: Contractor shall employ and pay for a testing laboratory to take samples of water and perform bacteriological tests from each section of piping installed.

1. Testing laboratory shall perform bacteriological tests on each water sample they collect and prepare reports; submit report to Owner and Architect / Civil Engineer.

3.11 FIELD QUALITY CONTROL

A. Contractor Quality Control: Employ / assign quality control personnel to monitor the work of this section for conformance to the requirements of the Contract Documents and to good construction practices.

1. Contractor is solely responsible for managing and controlling the quality of the work and conformance with the requirements of the Contract Documents.

2. Contractor shall rely on his own testing, experience and skill in determining what means and methods to employ to achieve the requirements of water utility and the Contract Documents.

B. Water Distribution System Inspection:

1. Inspect in accordance with City of Everett.

a. Request inspection 48 hours prior to placing aggregate cover over pipe.

b. If tests indicate Work does not meet specified requirements, remove Work, replace and retest at Contractor's expense.

c. Water line shall not be put into service until after cleaning has been completed and tests are satisfactory.

END OF SECTION

SECTION 33 3000

SANITARY SEWER SYSTEM

PART 1 GENERAL

1.01 RELATED DOCUMENTS

A. Drawings and general provisions of the Contract, including General Conditions, Supplementary Conditions and Divisions 00 and 01 Specification Sections, apply to work of this section.

1.02 SECTION INCLUDES

A. Site Sanitary Sewer System.

B. Trenching, Bedding and Backfilling.

1.03 REFERENCES

A. References shall be the edition current as of the date of the Contract Documents.

B. ASTM D2321 - Standard Practice for Underground Installation of Thermoplastic Pipe for Sewers and Other Gravity-Flow Applications.

C. ASTM D3034 - Standard Specification for Type PSM Poly(Vinyl Chloride) (PVC) Sewer Pipe and Fittings.

D. ASTM F477 - Standard Specification for Elastomeric Seals (Gaskets) for Joining Plastic Pipe.

E. WSDOT 7-17.3(2) - Cleaning and Testing.

F. WSDOT 9-05.1(5) - Washington State Department of Transportation - PVC Drain Pipe, Couplings, and Fittings.

1.04 SUBMITTALS

A. Refer to Section 01 3300 for submittal procedures.

B. Provide product data for the following:

1. Pipe and Fittings
2. Manholes
3. Cleanouts
4. Grease Interceptor

5. Accessories

C. Test Reports: Provide test reports to the Architect / Civil Engineer as soon as possible after completion of the Work.

1.05 QUALITY ASSURANCE

A. Maintain one set of WSDOT Specifications and project plans and specifications on site.

1.06 DELIVERY, STORAGE AND HANDLING

A. Handle and store PVC piping and fittings per manufacturer's recommendations and do not store plastic structures, pipe and fittings in direct sunlight.

B. Protect pipe, fittings, and seals from dirt and damage.

C. Handle manholes and other structures according to manufacturer's written instructions.

1.07 PROJECT CONDITIONS

A. Locate, mark and protect existing utilities as specified in Section 02 1725 prior to start of trenching.

B. Schedule shutdown of existing utilities affected by work of this section as specified in Section 02 1725.

1.08 SAFETY CONSIDERATIONS

A. The Contractor is solely responsible for developing a safety plan to protect workers and the public from injury or harm conforming to all Local, State and Federal requirements and for executing and enforcing it on the Project site.

1. Contractor shall consult with their own Geotechnical Engineering expert for determining soil classification relative to safe sloping of soils.

2. Contractor shall determine safe excavation and dewatering methods, monitor excavations and earthwork operations for safety concerns and provide shoring and other protection as required to protect workers.

3. It is not the intent of the Contract Documents to dictate any unsafe construction means or methods; Contractor shall determine means and methods of construction conforming to their safety plan as required to construct work shown on the Contract Documents.

PART 2 PRODUCTS

2.01 PIPES AND FITTINGS

A. Gravity Pipes and Fittings: Polyvinyl Chloride (PVC) per WSDOT 9-05.1(5) and ASTM D3034 SDR 35 with joints and rubber gaskets conforming to ASTM D3212 and ASTM F477.

2.02 CLEANOUTS

A. Cleanouts: Conform to the detail on the Drawings.

1. Ring and Cover:

a. Manufacturer / Product: Olympic Foundry Inc., Cast Iron Meeting H20 Load is the basis of design and the standard of quality, function, performance and appearance required for this project.

1) Olympic Foundry Inc.; Cast Iron Meeting H20 Load (specified, basis of design).

2) Products by other manufacturers may be acceptable, subject to their ability to meet or exceed this standard and provide products conforming with the requirements of the Drawings and this Specification.

3) Substitutions: Refer to Section 01 6000 for substitution procedures and requirements. Proposed substitutions must match specified product performance and colors.

2.03 BEDDING AND BACKFILL MATERIAL

A. Pipe Bedding and Trench Backfill: As specified in Section 31 2333.

2.04 ACCESSORIES

A. Detectable Warning Tape and Tracer Wire: As specified in Section 31 2333.

B. Joint Mortar: Portland cement based, fast setting, high strength, non-shrink grout.

PART 3 EXECUTION

3.01 COORDINATION

A. Review, coordinate and accommodate work of other sections that interface with, affect or are affected by the work of this section so as to facilitate the execution of the overall work of this project in a coordinated and efficient manner.

B. Coordinate horizontal and vertical layout of sanitary sewer system to accommodate new and existing utilities, review conflicts with Architect / Civil Engineer prior to start of trenching.

3.02 HORIZONTAL AND VERTICAL CONTROL

A. Employ a Land Surveyor registered in the State of Washington to lay out and stake the Work and provide horizontal and vertical control; refer to Section 01 7000 for additional requirements.

1. Locate and protect survey control and reference points.

2. Provide field engineering services. Establish elevations, lines, and levels, utilizing recognized engineering survey practices.

B. Lay out and stake utility lines prior to starting trenching.

3.03 PREPARATION

A. Locate and mark existing utilities as required in Section 02 1725.

B. Schedule shutdown of existing utilities affected by work of this section as specified in Section 02 1725.

3.04 TRENCHING, BEDDING AND BACKFILL

A. Trenching, Bedding and Backfill: As specified in Section 31 2333 for excavation, trenching, bedding and backfilling.

B. Conform to details shown on Drawings.

3.05 INSTALLATION – GENERAL

A. General Locations and Arrangements: Drawing plans and details indicate general location and arrangement of underground sanitary sewer system. Location and arrangement of piping layout take design considerations into account. Install piping as indicated, to extent practical.

B. Install piping beginning at low point, true to grades and alignment indicated with unbroken continuity of invert.

1. Place bell ends of piping facing upstream.

2. Install gaskets, seals, sleeves, and couplings according to manufacturer's written instructions for use of lubricants, cements, and other installation requirements.

C. Use manholes for changes in direction unless fittings are indicated. Use fittings for branch connections, unless direct tap into existing sewer is indicated.

3.06 CONNECTION TO EXISTING SYSTEM

A. Connection to existing public sanitary sewer main shall be made by machine-made tap and mechanical saddle in accordance with the drawings.

3.07 INSTALLATION – PIPE

A. PVC Sewer Pipe and Fittings: Install in accordance with ASTM D2321, manufacturer's installation instructions.

B. Lay pipe with uniform slope as shown on Drawings.

C. Bed pipe for proper support as specified in Section 31 2333.

D. System Piping Joints: Make joints using system manufacturer's couplings, unless otherwise indicated.

E. Joint piping made of different materials or dimensions with couplings made for this application. Use couplings that are compatible with and that fit both systems' materials and dimensions.

3.08 INSTALLATION – CLEANOUT

A. Install cleanouts and riser extension from sewer pipe to cleanout at as specified on the Drawings. Install piping so cleanouts open in direction of flow of sewer pipe.

B. Set cleanout frames and covers in soil or landscaping per details on the Drawings. In landscape areas set with tops 1-inch above surrounding grade.

C. Set cleanout frames and covers in asphalt or concrete pavement, per details on the Drawings, with tops flush with pavement surface.

3.09 INSTALLATION – IDENTIFICATION

A. Install continuous detectable warning tape during backfilling of trench for sanitary sewer piping. Locate 12-inches below finished grade, directly over piping.

3.10 PROTECTION AND CLEANING

A. Protect new and existing sanitary sewer system from damage and from becoming full of dirt and debris during construction.

B. At conclusion of project, remove all dirt and debris from manholes and piping, leave entire system in clean condition.

3.11 FIELD QUALITY CONTROL

A. Contractor Quality Control: Employ / assign quality control personnel to monitor the work of this section for conformance to the requirements of the Contract Documents and to good construction practices.

1. Contractor is solely responsible for managing and controlling the quality of the work and conformance with the requirements of the Contract Documents.

2. Contractor shall rely on his own testing, experience and skill in determining what means and methods to employ to achieve the requirements of the City and the Contract Documents.

B. Request inspection 48 hours prior to placing aggregate cover over pipe.

C. If inspections and tests indicate Work does not meet specified requirements, remove Work, replace and retest at Contractor's expense.

D. Clean interior of piping and structures of dirt, sediment and superfluous material as work progresses.

1. Place plug in end of incomplete piping at end of day and when work stops.

2. Flush piping between manholes and other structures to remove collected debris.

E. Inspections and Testing: Conduct inspections and testing in the presence of the AHJ, Engineer and Owner's representative.

1. Inspections: Interior of piping and structures shall be inspected in accordance with WSDOT 7-17.3(2) requirements.

a. Defects requiring correction include the following:

1) Slope: More than 0.05% difference from specified slope.

2) Alignment: Less than full diameter of inside of pipe is visible between structures.

3) Deflection: Flexible piping with deflection that prevents passage of mandrel of size not less than 95 percent of piping diameter.

a) Deflection Test for Thermoplastic Piping shall be conducted not less than 30 days after the trench backfill and compaction has been completed, but before any paving is completed.

4) Crushed, broken, cracked, or otherwise damaged piping.

5) Infiltration: Water leakage into piping.

6) Exfiltration: Water leakage from or around piping.

b. Replace defective piping using new materials at Contractor's expense, and repeat inspections until defects are within allowances specified.

c. Reinspect and repeat procedure until results are satisfactory.

2. Testing: After inspections are complete and approved, test new systems, and parts of existing systems that have been altered, extended, or repaired, for leaks and defects using low pressure air test in accordance with WSDOT 7-17.3(2).

   a. Do not enclose, cover, or put into service before inspection and approval.

   b. Test completed piping systems according to authorities having jurisdiction.

   c. Schedule tests and inspections by authorities having jurisdiction with at least 48 hours advance notice.

   d. Submit separate reports for each test to Architect / Civil Engineer.

   e. Replace leaking piping, at Contractor's expense, using new materials, and repeat testing until leakage is within acceptable limits.

   f. Retest and repeat procedure until results are satisfactory.

END OF SECTION

SECTION 33 4000

STORM DRAINAGE SYSTEM

PART 1 GENERAL

1.01 RELATED DOCUMENTS

A. Drawings and general provisions of the Contract, including General Conditions, Supplementary Conditions and Divisions 00 and 01 Specification Sections, apply to work of this section.

1.02 SECTION INCLUDES

A. Storm Drainage System.

1.03 REFERENCES

A. References shall be the edition current as of the date of the Contract Documents.

1. ASTM D2321 - Standard Practice for Underground Installation of Thermoplastic Pipe for Sewers and Other Gravity-Flow Applications.

1.04 SUBMITTALS

A. Refer to Section 01 3300 for submittal procedures.

B. Provide product data for the following:

1. Pipes and Fittings.
2. Drainage Structures.
3. Cleanouts.
4. Downspout Boots.
5. Storm Drainage Aggregates.
6. Accessories

1.05 QUALITY ASSURANCE

A. Maintain one set of WSDOT Specifications and project plans and specifications on site.

1.06 DELIVERY, STORAGE AND HANDLING

A. Handle and store PVC piping and fittings per manufacturer's recommendations and do not store plastic structures, pipe and fittings in direct sunlight.

B. Protect pipe, pipe fittings, and seals from dirt and damage.

C. Handle catch basins and other structures according to manufacturer's written instructions.

1.07 PROJECT CONDITIONS

A. Field verify that the location and elevations of the storm drain system indicated on the Drawings accommodates the existing utilities, structures and conditions on the site; review and resolve any conflicts with Architect / Engineer prior to start of trenching.

B. Locate, mark and protect existing utilities as specified in Section 02 1725 prior to start of trenching.

C. Schedule shutdown of existing utilities affected by work of this section as specified in Section 02 1725.

1.08 SAFETY CONSIDERATIONS

A. The Contractor is solely responsible for developing a safety plan to protect workers and the public from injury or harm conforming to all Local, State and Federal requirements and for executing and enforcing it on the Project site.

1. Contractor shall consult with their own Geotechnical Engineering expert for determining soil classification relative to safe sloping of soils.

2. Contractor shall determine safe excavation and dewatering methods, monitor excavations and earthwork operations for safety concerns and provide shoring and other protection as required to protect workers.

3. It is not the intent of the Contract Documents to dictate any unsafe construction means or methods; Contractor shall determine means and methods of construction conforming to their safety plan as required to construct work shown on the Contract Documents.

PART 2 PRODUCTS

2.01 PIPES AND FITTINGS

A. Allowable Gravity Storm Drainage Conveyance Pipes and Fittings (Storm Drain Line / Roof Drain Line) conforming to WSDOT Std. Spec. 7-04. The following materials may be used, unless otherwise identified specifically on the plans:

1. Solid Wall PVC Storm Pipe and Fittings (PVC). Minimum cover shall be 3.00'. May be used on-site and in the City Right-of-Way.

2.02 CLEANOUTS

A. Conform to details on Drawings.

2.03 STORM DRAINAGE AGGREGATES

A. Gravel Backfill for Drains: WSDOT 9-03.12(4).

2.04 ACCESSORIES

A. Detectable Warning Tape: Refer to Section 31 2333 31 2333.

B. Joint Mortar: Portland cement based, fast setting, high strength, non-shrink grout.

PART 3 EXECUTION

3.01 COORDINATION

A. Review, coordinate and accommodate work of other sections that interface with, affect or are affected by the work of this section so as to facilitate the execution of the overall work of this project in a coordinated and efficient manner.

B. Coordinate horizontal and vertical layout of storm drainage system to accommodate new and existing utilities, review conflicts with Architect / Engineer prior to start of trenching.

C. Coordinate location of storm drain connection with downspouts and roof drain lines.

3.02 HORIZONTAL AND VERTICAL CONTROL

A. Employ a Land Surveyor registered in the State of Washington to lay out and stake the Work and provide horizontal and vertical control; refer to Section 01 7000 for additional requirements.

1. Locate and protect survey control and reference points.

2. Provide field engineering services. Establish elevations, lines, and levels, utilizing recognized engineering survey practices.

B. Lay out and stake utility lines prior to starting trenching.

3.03 PREPARATION

A. Locate and mark existing utilities as required in Section 02 1725.

B. Schedule shutdown of existing utilities affected by work of this section with Owner as specified in Section 02 1725 02 1725.

3.04 TRENCHING, BEDDING AND BACKFILL

A. Trenching, Bedding and Backfill: As specified in Section 31 2333 for excavation, trenching, bedding and backfilling.

B. Conform to details shown on Drawings.

3.05 INSTALLATION – GENERAL

A. General Locations and Arrangements: Drawing plans and details indicate general location and arrangement of underground storm drainage piping. The location and arrangement of the piping layout shown takes design considerations into account. Install piping as indicated, to extent practical.

B. Install piping beginning at low point, true to grades and alignment indicated with unbroken continuity of invert. Place bell ends of piping facing upstream. Install gaskets, seals, sleeves, and couplings according to manufacturer's written instructions for use of lubricants, cements, and other installation requirements.

C. Install in accordance with WSDOT Std. Spec 7-08.

3.06 INSTALLATION – PIPE

A. PVC, CPEP, and CPP Storm Sewer Pipe and Fittings: Install in accordance with ASTM D2321 and manufacturer's installation instructions.

B. Lay pipe with uniform slope as shown on Drawings.

C. Bed pipe for proper support as specified in Section 31 2333.

D. Joint piping made of different materials or dimensions with couplings made for this application. Use couplings that are compatible with and that fit both systems' materials and dimensions.

3.07 INSTALLATION – CLEANOUT

A. Install cleanouts and riser extension from storm pipe to cleanout at grade in accordance with details shown on the Drawings. Install piping so cleanouts open in direction of flow of storm pipe.

B. Set cleanout frames and covers in earth or landscaping per details on plans. Set with tops 1-inch above surrounding grade.

C. Set cleanout frames and covers in asphalt concrete pavement, per details on plans, with tops flush with pavement surface.

3.08 INSTALLATION – IDENTIFICATION

A. Install continuous detectable warning tape during backfilling of trench for storm drain piping. Locate 12-inches below finished grade, directly over piping.

3.09 PROTECTION AND CLEANING

A. Protect new and existing storm drainage system from damage and from becoming full of dirt and debris during construction.

B. At conclusion of project, remove all dirt and debris from catch basins, manholes, piping and storm drain structures; leave entire system in clean condition.

3.10 FIELD QUALITY CONTROL

A. Contractor Quality Control: Employ / assign quality control personnel to monitor the work of this section for conformance to the requirements of the Contract Documents and to good construction practices.

1. Contractor is solely responsible for managing and controlling the quality of the work and conformance with the requirements of the Contract Documents.

2. Contractor shall rely on his own testing, experience and skill in determining what means and methods to employ to achieve the requirements of the City of Tacoma and the Contract Documents.

B. Clean interior of piping and structures of dirt, sediment and superfluous material as work progresses. Maintain swab or drag in piping, and pull past each joint as it is completed.

1. Place plug in end of incomplete piping at end of day and when work stops.

2. Flush piping between catch basins and other structures to remove collected debris.

END OF SECTION

SECTION 33 4613

FOUNDATION DRAINAGE PIPING

PART 1 GENERAL

1.01 RELATED DOCUMENTS

A. Drawings and general provisions of the Contract, including General Conditions, Supplementary Conditions and Divisions 00 and 01 Specification Sections, apply to work of this section.

1.02 SECTION INCLUDES

A. Foundation Drainage System.

1.03 REFERENCES

A. References shall be the edition current as of the date of the Contract Documents.

B. ASTM D2729 - Standard Specification for Poly(Vinyl Chloride) (PVC) Sewer Pipe and Fittings.

C. ASTM D4355/D4355M - Standard Test Method for Deterioration of Geotextiles by Exposure to Light, Moisture, and Heat in a Xenon Arc-Type Apparatus.

D. ASTM D4491/D4491M - Standard Test Methods for Water Permeability of Geotextiles by Permittivity.

E. ASTM D4533/D4533M - Standard Test Method for Trapezoid Tearing Strength of Geotextiles.

F. ASTM D4632/D4632M - Standard Test Method for Grab Breaking Load and Elongation of Geotextiles.

G. ASTM D4751 - Standard Test Methods for Determining Apparent Opening Size of a Geotextile.

H. ASTM D6241 - Standard Test Method for Static Puncture Strength of Geotextiles and Geotextile- Related Products Using a 50-mm Probe.

I. WSDOT 9-03.12(5) - Washington State Department of Transportation - Gravel Backfill for Drywells.

J. WSDOT 9-33.2 Table 3 - Washington State Department of Transportation - Geotextile for Separation or Soil Stabilization.

1.04 SAFETY CONSIDERATIONS

A. The Contractor is solely responsible for developing a safety plan to protect workers and the public from injury or harm conforming to Local, State and Federal requirements and for executing and enforcing it on the Project site.

1. Contractor shall consult with their own Geotechnical Engineering expert for determining soil classification relative to safe sloping of soils.

2. Contractor shall determine safe excavation and dewatering methods, monitor excavations and earthwork operations for safety concerns and provide shoring and other protection as required to protect workers.

3. It is not the intent of the Construction Documents to dictate any unsafe construction means or methods; Contractor shall determine means and methods of construction conforming to their safety plan as required to construct work shown on the Contract Documents.

PART 2 PRODUCTS

2.01 MATERIALS

A. Polyvinyl Chloride Pipe (Footing Drain): ASTM D2729; solid type and perforated type with 1/2-inch diameter perforations in lower half of pipe, with lower quarter segment unperforated to facilitate water flow; plain end, 4 inch diameter; with required fittings.

B. Filter Fabric: Geotextile filter fabric suitable for filtering fine particulate and preventing them from entering the drain rock and footing drain. Fabric shall be nonwoven and meet the property requirements of WSDOT 9-33.2 Table 3 for geotextile used for separation.

1. Property Requirements:

a. Apparent opening size of No. 30 maximum per ASTM D4751.

b. Water permittivity of 0.02 sec-1 minimum per ASTM D4491/D4491M.

c. Grab tensile strength of 160 pound minimum, grab failure strain of ≥ 50 percent, and seam break strength of 140 pounds minimum per ASTM D4632/D4632M.

d. Puncture resistance of 310 pounds minimum per ASTM D6241.

e. Tear strength of 50 pounds minimum per ASTM D4533/D4533M.

f. Ultraviolet (UV) radiation stability of 50% strength retained minimum after 500 hours in xenon arc device per ASTM D4355/D4355M.

C. Drain Rock: Clean washed drainage rock or gravel conforming to WSDOT 9-03.12(5).

1. Property Requirements:

99-100% passing the 1-1/2-inch sieve

50-100% maximum passing the 1-inch sieve

0-20% maximum passing the 3/4-inch sieve

0-2% maximum passing the 3/8-inch sieve

0-1.5% maximum passing the No. 200 sieve

PART 3 EXECUTION

3.01 COORDINATION

A. Review, coordinate and accommodate work of other trades that interface with, affect or are affected by the work of this section so as to facilitate the execution of the overall Work of this project in a coordinated and efficient manner.

3.02 INSTALLATION

A. Filter Fabric: Install continuous length of filter fabric onto subgrade prior to placing drain rock and drain pipe.

1. Width shall be adequate to fully encircle drain rock and footing drain pipe, with edges overlapped 12-inches on top.

2. After drain rock is installed around the footing drain pipe, overlap the filter fabric 12-inches on top of the drain rock.

B. Drain Pipe: Lay piping continuously around entire perimeter of building foundation with pipe invert elevation matching bottom of adjacent footing; install fittings in accordance with manufacturer's instructions.

1. Do not create low spots or trap water in drainage piping; connect low spots to storm drain catch basin / manhole via tight line to permit water drainage.

2. Lay pipe with perforation holes facing down.

3. Connect perforated foundation drainage piping directly to storm drain catch basin or manhole with a dedicated tight line (solid pipe).

4. CAUTION: Take special care to prevent accidental interconnection of the foundation drainage system with roof drainage or storm drain lines.

C. Drain Rock: Install drain rock over and around footing drain pipe to completely cover the drain pipe with a minimum of 3-inches of material.

3.03 FIELD QUALITY CONTROL

A. Contractor Quality Control: Employ / assign quality control personnel to monitor the work of this section for conformance to the requirements of the Contract Documents and to good construction practices.

1. Contractor is solely responsible for managing and controlling the quality of the work and conformance with the requirements of the Contract Documents.

END OF SECTION

SECTION 33 5100

NATURAL GAS DISTRIBUTION

PART 1 GENERAL

1.01 RELATED DOCUMENTS

A. Drawings and general provisions of the Contract, including General Conditions, Supplementary Conditions and Divisions 00 and 01 Specification Sections, apply to work of this section.

1.02 SECTION INCLUDES

A. Gas Service.

B. Trenching, Bedding and Backfilling.

1.03 REFERENCES

A. PSE - Puget Sound Energy Gas Handbook.

1.04 SUBMITTALS

A. Refer to Section 01 3300 for submittal procedures.

B. Gas Service Installation Application: Prepare and submit application and any information required by PSE, review with Contractor and Owner and obtain signatures as required by PSE.

1. Submit fully completed and signed Gas Service Installation Application to PSE.

1.05 QUALITY ASSURANCE

A. Perform work in accordance with PSE Gas Handbook.

1.06 REGULATORY REQUIREMENTS

A. Conform to applicable codes for materials and installation of the Work of this section.

1.07 PROJECT CONDITIONS

A. Coordinate the installation and connection of natural gas service piping and meter by Puget Sound Energy (PSE).

B. Locate, mark and protect existing utilities as specified in Section 02 1725 prior to start of trenching.

1.08 SAFETY CONSIDERATIONS

A. The Contractor is solely responsible for developing a safety plan to protect workers and the public from injury or harm conforming to all Local, State and Federal requirements and for executing and enforcing it on the Project site.

PART 2 PRODUCTS

2.01 GAS SERVICE PIPING AND METER

A. Gas Service Piping and Meter: Provided and installed by PSE.

2.02 BEDDING AND BACKFILL MATERIAL

A. Pipe Bedding and Trench Backfill: As specified in Section 31 2333.

PART 3 EXECUTION

3.01 COORDINATION

A. Review, coordinate and accommodate work of other trades that interface with, affect or are affected by the work of this section so as to facilitate the execution of the overall Work of this project in a coordinated and efficient manner.

B. Coordinate route and elevation of underground gas service to avoid existing and new utilities as required by PSE and to allow future unrestricted access to service line.

C. Coordinate location and capacity of gas meter and connection to building gas system with Division 22.

3.02 HORIZONTAL AND VERTICAL CONTROL

A. Employ a Land Surveyor registered in the State of Washington to lay out and stake the Work and provide horizontal and vertical control; refer to Section 01 7000 for additional requirements.

3.03 PREPARATION

A. Locate and mark existing utilities as required in Section 02 1725.

B. Schedule shutdown of existing utilities affected by work of this section as specified in Section 02 1725.

C. Verify gas service end locations and depths and pipe elevations crossing with other utilities prior to commencing construction of pipelines.

D. Remove large stones, boulders or other hard matter, which could damage piping or impede consistent pipe grade backfilling or compaction.

3.04 TRENCHING, BEDDING AND BACKFILL

A. Excavate pipe trench to depth and configuration required by PSE and to maintain a minimum of 36-inches of cover.

B. Provide trenching and bedding as required by PSE and as specified in Section 31 2333. Hand trim excavation for accurate placement of pipe to elevations required.

C. Place bedding material at trench bottom, level materials in continuous layer not exceeding 6-inches compacted depth.

D. Maintain optimum moisture content of bedding material to attain required compaction density.

E. After installation of gas service piping by PSE, backfill and compact trench as specified in Section 31 2333 and as required by PSE.

3.05 INSTALLATION – GAS SERVICE PIPING, METER AND VENT PIPING

A. Gas Service Piping: Coordinate installation by PSE.

B. Gas Meter: Coordinate installation by PSE.

C. Gas Meter Vent Piping: Coordinate layout and installation of vent piping by PSE with Architect prior to actual installation; piping shall not be surface mounted on exterior of building; conceal from view in wall or other location approved by Architect.

3.06 CONNECTIONS

A. Connection to Gas Main: Coordinate connection of gas service piping to gas main by PSE.

B. Connection of Building Gas System to Gas Meter: Specified in Division 22; coordinate with PSE.

3.07 PROTECTION

A. Protect finished Work from any disturbance.

B. Protect pipe and aggregate cover from damage or displacement until backfilling operation is in progress.

3.08 FIELD QUALITY CONTROL

A. Contractor Quality Control: Employ / assign quality control personnel to monitor the work of this section for conformance to the requirements of the Contract Documents and to good construction practices.

1. Contractor shall rely on his own testing, experience and skill in determining what means and methods to employ to achieve the requirements of PSE and the Contract Documents.

B. Conform to PSE requirements.

END OF SECTION